ENGINEERING STANDARD

FOR

PIPING MATERIAL SELECTION

(ON PLOT PIPING)

PART ONE

GENERAL

FIRST EDITION
APRIL 2012

FOREWORD

The Iranian Petroleum Standards (IPS) reflect the views of the Iranian Ministry of Petroleum and are intended for use in the oil and gas production facilities, oil refineries, chemical and petrochemical plants, gas handling and processing installations and other such facilities.

IPS are based on internationally acceptable standards and include selections from the items stipulated in the referenced standards. They are also supplemented by additional requirements and/or modifications based on the experience acquired by the Iranian Petroleum Industry and the local market availability. The options which are not specified in the text of the standards are itemized in data sheet/s, so that, the user can select his appropriate preferences therein.

The IPS standards are therefore expected to be sufficiently flexible so that the users can adapt these standards to their requirements. However, they may not cover every requirement of each project. For such cases, an addendum to IPS Standard shall be prepared by the user which elaborates the particular requirements of the user. This addendum together with the relevant IPS shall form the job specification for the specific project or work.

The IPS is reviewed and up-dated approximately every five years. Each standards are subject to amendment or withdrawal, if required, thus the latest edition of IPS shall be applicable

The users of IPS are therefore requested to send their views and comments, including any addendum prepared for particular cases to the following address. These comments and recommendations will be reviewed by the relevant technical committee and in case of approval will be incorporated in the next revision of the standard.

Standards and Research department

No.17, Street14, North kheradmand

Karimkhan Avenue, Tehran, Iran .

Postal Code- 1585886851

Tel: 88810459-60 & 66153055

Fax: 88810462

Email: Standards@ nioc.ir

GENERAL DEFINITIONS

Throughout this Standard the following definitions shall apply.

COMPANY :

Refers to one of the related and/or affiliated companies of the Iranian Ministry of Petroleum such as National Iranian Oil Company, National Iranian Gas Company, National Petrochemical Company and National Iranian Oil Refinery And Distribution Company.

PURCHASER :

Means the “Company" where this standard is a part of direct purchaser order by the “Company”, and the “Contractor” where this Standard is a part of contract document.

VENDOR AND SUPPLIER:

Refers to firm or person who will supply and/or fabricate the equipment or material.

CONTRACTOR:

Refers to the persons, firm or company whose tender has been accepted by the company.

EXECUTOR :

Executor is the party which carries out all or part of construction and/or commissioning for the project.

INSPECTOR :

The Inspector referred to in this Standard is a person/persons or a body appointed in writing by the company for the inspection of fabrication and installation work.

SHALL:

Is used where a provision is mandatory.

SHOULD:

Is used where a provision is advisory only.

WILL:

Is normally used in connection with the action by the “Company” rather than by a contractor, supplier or vendor.

MAY:

Is used where a provision is completely discretionary.

PART I

General (guidance on the application of piping classes)

PART II

Piping class rating: PN 20 (150) and PN 50 (300)

PART III

Piping class rating: PN 100 (600), PN 150 (900), PN 250 (1500) and PN 420 (2500).

CONTENTS : PAGE No.

APPENDICES:

ENGINEERING STANDARD

FOR

PIPING MATERIAL SELECTION

(ON PLOT PIPING)

PART ONE GENERAL

1. SCOPE

This Standard contains piping classes primarily developed for petroleum refineries, gas and petrochemical plants installed onshore. It is also intended for use in onshore exploration and production facilities as well as booster stations as far as applicable. Facilities covered by this Standard are all within the property limits as defined in ASME B31.3.

Note:

This is a revised version of this standard, which is issued as revision (1)-2012. Revision (0)-2000 of the said standard specification is withdrawn.

2. REFERENCES

Throughout this Standard the following dated and undated standards/codes are referred to. These referenced documents shall, to the extent specified herein, form a part of this standard. For dated references, the edition cited applies. The applicability of changes in dated references that occur after the cited date shall be mutually agreed upon by the Company and the Vendor. For undated references, the latest edition of the referenced documents (including any supplements and amendments) applies.

ASME (AMERICAN SOCIETY OF MECHANICAL ENGINEERS)

B1.1	“Unified Inch Screw Threads (UN and UNR Thread Form)”
B1.20.1	“Pipe Threads, General Purpose (Inch)”
B16.10	“Face to Face and End to End Dimensions of Valves”
B16.11	“Forged Steel Fittings, Socket Welding and Threaded”
B16.20	“Metallic Gaskets for Pipe Flanges-Ring Joint, Spiral-Wound, and Jacketed”
B16.21	“Nonmetallic Flat Gaskets for Pipe Flanges”
B16.25	“Buttwelding Ends”
B16.28	“Wrought Steel Buttwelding Short Radius Elbows and Returns”
B16.3	“Malleable Iron Threaded Fittings, Class 150 and 300”
B16.34	“Valves-Flanged, Threaded, and Welding End”
B16.36	“Orifice Flanges”
B16.42	“Ductile Iron Pipe Flanges and Flanged Fittings (Class 150 and 300)”
B16.47	“Large Diameter Steel Flanges NPS 26 through NPS 60”
B16.9	“Factory-Made Wrought Steel Buttwelding Fitting”
B18.2.2	“Square and Hex Nuts (Inch Series)”
B46.1	“Surface Texture (Surface Roughness, Waviness and Lay)”
PVBC section I	“Rules for Construction of Power Boilers”
B-31.1- 2004	“Power Piping”
B-31.3- 2010	“Process Piping”
B-36.10M- 2004	“Welded and Seamless Wrought Steel Pipe”
B-36.19M	“Stainless Steel Pipe”
B-16.5- 2003	“Pipe Flanges and Flanged Fittings”

Section VIII Division I Appendix 2

API (AMERICAN PETROLEUM INSTITUTE)

API-598	"Valve Inspection and Testing"
API-599	"Metal Plug Valves-Flanged and Welding Ends"
API-600	"Steel Gate Valves, Flanged and Buttwelding Ends"
API-601	"Metallic Gasket for Raised-Face, Pipe Flanges and Flanged Connections (Double Jacketed Corrugated and Spiral-wound)"
API-602	"Compact Steel Gate Valves-Flanged, Threaded, Welding and Extended-Body Ends"
API-609	"Butterfly valves, Lug-Type and Wafer-Type"
API-6D	"Pipeline Valves (Gate, Plug, Ball and Check-Valves)"
API-941	"Steels for Hydrogen Service at Elevated Temperature and Pressure in Petroleum Refineries and Petrochemical Plants."
RP-521	"Guide for Pressure-Relieving and Depressuring Systems"

BSI (BRITISH STANDARD INSTITUTION)

BS-5146	"Specification for Inspection and Test of Steel Valves for the petroleum, petrochemical and allied inspection"
BS-5352	"Steel Wedge Gate, Globe and Check Valves"
BS-5351	"Steel Ball Valves"
BS 3274- 1960	"Tubular Heat Exchangers for General Purposes"
BS 3293- 1960	"Specification for Carbon Steel Pipe Flanges (over 24" nominal size) for the Petroleum Industry"
BS 4485- 1988	"Water Cooling Towers"
BS 6129-1- 1981	"Selection and Application of Bellows Expansion Joints"

IPS (IRANIAN PETROLEUM STANDARDS)

IPS-E-GN-100	"Engineering Standard for Units"
IPS-M-GN-130	"Material and Equipment Standard for Metric Type Fasteners (Screw Bolts, Screw Threads, Nuts, Washers)'
IPS-C-ME-130	"Construction Standard for LPG pressure Storage Spheres"
IPS-C-PI-350	"Construction Standard for Plant Piping Systems Pressure Testing"
IPS-E-PI-200	"Engineering Standard for Flexibility Analysis"
IPS-E-PI-240	"Engineering Standard for Plant Piping Systems"
IPS-G-PI-230	"General Standard for Strainers and Filters"
IPS-G-PI-280	"General Standard for Pipe Supports"
IPS-M-PI-110	"Material and Equipment Standard for Valves"
IPS-M-PI-150	"Material and Equipment Standard for Flanges & Fittings"
IPS-E-SF-220	"Engineering Standard for Fire Water Distribution & Storage Facilities"
IPS-G-SF-460	"General Standard for First aids and Sanitation"

IPS-C-TP-102	"Construction Standard for Painting"
IPS-E-TP-100	"Engineering Standard for Paints"
IPS-E-TP-270	"Engineering Standard for Coatings"
IPS-E-TP-700	"Engineering Standard for Thermal Insulations"
IPS-E-TP-740	"Engineering Standard for Corrosion Consideration in Material Selection"
IPS-D-PI-119	"Pressure Blind Detail"
IPS-D-PI-121	"Hydrostatic Test Blinds Thickness Allowable Test Pressure"
IPS-D-PI-129	"Miter Bends"
IPS-D-PI-148	"Ring & Blind for DN 650 (26") DN 1500 (60") R.F. Flange"

NACE (NATIONAL ASSOCIATION OF CORROSION ENGINEERS)

Paper No. 67	
MR-01-75	"Standard Material Requirement Sulfide Stress Cracking Resistant Metallic Material for Oil Field Equipment"
MR-01-03	"Materials Resistant to Sulfide Stress Cracking in Corrosive Petroleum Refining Environments."

NFPA (NATIONAL FIRE PROTECTION ASSOCIATION)

30- 2003	"Flammable and Combustible Liquids Code"

MSS (MANUFACTURERS STANDARDIZATION SOCIETY)

MSS-SP-6- 2001	"Standard Finishes for Contact Faces of Pipe Flanges and Connecting-End Flanges of Valves and Fittings"
MSS-SP-58- 1993	"Pipe Hangers and Supports-Materials, Design and Manufacture"
MSS-SP-69- 2002	"Pipe Hangers and Supports-Selection and Application"

3. DEFINITIONS AND TERMINOLOGY

3.1 CA

Corrosion allowance.

3.2 Design Limits

Pressure/temperature limits given in piping classes.

3.3 Piping Class Index

A term which identifies the main characteristics of all piping classes. (e.g. materials for pipe, valve trim and gaskets).

3.4 Service Index

A term which identifies which piping class to select for the service concerned and mentioned in the list (without prefix related to ASME rating).

3.5 PWHT

Indicates post weld heat treatment.

3.6 Company

Refers to one of the related and/or affiliated companies of the Iranian Ministry of Petroleum such as National Iranian Oil Company, National Iranian Gas Company, National Petrochemical Company etc.

3.7 Vendor/Supplier

Refers to firm or person who will supply and/or fabricate the equipment or material.

3.8 Executor

The party which carries out all, or part of the construction, installation and commissioning aspect for the projects.

3.9 Designer

The person or party which is responsible to the Company for engineering/design of the plants.

Note:

Any specific application of the terms and responsibilities for the parties defined above, are a matter for the conditions of contract on a project.

4. ABBREVIATIONS

BTV	Butterfly valve
DRJ	Dresser coupling
EH	Exhaust head
FG	Sight glass
FRV	Freeze proof valve (Kelly type)
HC	Hose connection
IF	Insulation bolt & gasket
INJ	Injection nozzle
LKC	Lock & locking chain
MDMT	Minimum Design Metal Temperature
ME	Duplex type strainer
MOV	Motor operated valve
PSE	Rupture disc
SCL	Sample cooler

SN	Spray nozzle
SRT	“T” type strainer
SRY	“Y” type strainer
SXV	Stop-check valve
DN	Nominal Diameter
ERW	Electric Resistance Welding
ESD	Emergency Shut Down
GRP	Glass Reinforced Plastics
GRE	Glass Reinforced Epoxy
HFI	High Frequency Induction
LPG	Liquefied Petroleum Gas
MAIP	Maximum Allowable Incidental Pressure
MAOP	Maximum Allowable Operating Pressure
NGL	Natural Gas Liquid
NPS	Nominal Pipe Size
PN	Nominal Pressure Rating (class) Designation
RF	Raised Face
RTJ	Ring Type Joint
SAW	Submerged Arc Welding
SI	International System of Units
SMYS	Specified Minimum Yield Stress

For more information about abbreviations see **IPS STANDARD DRAWING**

5. UNIT

This Standard is based on International System of Units (SI), as per IPS-E-GN-100 except where otherwise specified.

6. IDENTIFICATION OF PIPING CLASSES

Each piping class is identified from two alphabetical characters which precede a two digit figure, e.g. AN04. The first alphabetical character indicates pressure rating of flange, i.e. ANSI or PN classes as follows:

Character	A	for ANSI rating	PN 20	(150)
Character	C	for ANSI rating	PN 50	(300)
Character	F	for ANSI rating	PN 100	(600)
Character	G	for ANSI rating	PN 150	(900)
Character	H	for ANSI rating	PN 250	(1500)
Character	J	for ANSI rating	PN 420	(2500)

The second alphabetical character indicates material group selected as follows:

Character	N	for Carbon Steel

Character	P	for Low and Intermediate Alloy Steel
Character	S	for Stainless Steel
Character	T	for Aluminum and Aluminum Base Alloy
Character	V	for Copper and Copper Alloys
Character	W	for Nickel and Nickel Base Alloys
Character	X	for Non-Metallic Material
Character	Z	for Carbon Steel with Lining

The two digit figure indicates differing service condition (e.g. process fluid being handled and service temperature limits). The figure has not been selected on the basis of specific purpose and as such is not meaningful. However, piping classes which have identical figure with same material group are for the same service condition.

Example for identification of piping class is given below:

Piping Class AN04 is compiled from:

A	for	ANSI rating	PN 20 (150).
N	for	Material	Group Carbon Steel.
04	for	Service Condition related to this Class.	

Similarly, piping Classes CN07 and FN07 are for ANSI rating 300 and 600 respectively. Also both piping classes indicate same material group and same service.

7. SELECTION OF PIPING CLASSES

To select a piping class, the "Service Index" should be screened to see whether the intended service is listed. If so, the appropriate ANSI rating class shall then be identified by matching the required design pressure and temperature with the design limits given in the piping classes.

For services not listed in the "Service Index", the "Piping Class Index" can be screened to see whether a piping class is available in which the materials are considered suitable for the intended service. Piping class so selected, may be used provided that Company approval is obtained.

8. GENERAL BASES OBSERVED IN PREPARATION OF PIPING CLASS TABLES

8.1 Design Codes

- Piping classes have been designed in accordance with ASME B 31.3.

- The design limits specified in the piping classes have been derived from the pressure/temperature ratings for flanges given in ASME B 16.5 unless otherwise stated in the piping class notes.

- Where specified by ASME B 31.3 bolting calculations have been performed to verify the ability to seat the selected gasket and to maintain a sealed joint under the given P/T range, ASME Section VIII Division I Appendix 2 has been followed for this.

- Allowable stress for the materials specifications contained in the piping class have been established inline with ASME B31.3 para. 302.3

Nominal wall thicknesses and outside diameters of pipe, as specified in the piping classes, are in accordance with ASME B 36.10 M and ASME B 36.19 M.

8.2 Design Values

Allowable stresses for the materials specifications contained in the piping class have been established in line with ASME B 31.3, Paragraph 302.3.

In accordance with ASME B 31.3, Paragraph 302.2.2, not more than 87.5% of the nominal wall thickness has been used in calculations for butt welding fittings.

8.3 Branch Connections

The branch fitting outlet and the butt welding fittings as listed in Page 4 of each piping class as per ASME B16.9 could replace the welded pipe-to-pipe connections.

Reinforcement requirements for 90 degree pipe-to-pipe branch connections have been checked against the design limits of the piping class. The check calculations were performed in accordance with ASME B 31.3, Paragraphs 304.3.2 and 304.3.3. The additional reinforcement of the welds is not taken into account.

8.4 Sour Service

The sour services shall be in accordance with NACE MR-0103.

8.5 Winterization & Heat Conservation

8.5.1 The material of winterization/ heat conservation system tracers shall be followed and used as per IPS-E-PR-420 and this IPS.

8.5.2 When any carbon steel piping are to be designed and installed with carbon steel steam jacketing, (liquid sulphur, and hot bitumen services), related piping classes for main piping and jacketing shall govern for each system except for main piping corrosion allowance.

The main piping corrosion allowance shall be increased by an amount equal to jacketing corrosion allowance.

8.6 Underground Piping

8.6.1 The selection of type and material of underground piping shall be in accordance with this standard

8.6.2 All buried steel piping shall be primed, coated and wrapped in accordance with IPS-E-TP-270.

8.6.3 For cathodic protection of Underground lines that connected to aboveground piping shall be used kits of insulating flanges.

9. DESIGN CONSIDERATIONS

This Standard shall be used in conjunction with the following considerations:

9.1 General piping design requirements shall be as per IPS-E-PI-240.

9.2 Unless otherwise specified in piping material selection, corrosion considerations shall be as per IPS-E-TP-740 and IPS-E-PI-240

9.3 Unless otherwise noted, all pressure and temperatures referred to in this Standard are design conditions.

9.4 Buried steel piping is not considered as new classes. These pipings shall be externally protected in accordance with requirements of IPS-E-TP-270.

9.5 Valves

- Except for parts mentioned in this Standard, valve specification shall conform to IPS-M-PI-110.
- Weld ends shall be specified with bore to match mating pipe.
- Gear operators are required for valves in sizes shown below. All such valves shall have individual item code number.

RATING	GATE	GLOBE	BALL	BUTTERFLY	PLUG
125#	18" and larger	-	-	-	-
150#	14" and larger	8" and larger	8" and larger	6" and larger	6" and larger
300#	14" and larger	8" and larger	6" and larger	6" and larger	6" and larger
600#	12" and larger	6" and larger	4" and larger	4" and larger	-
900#	8" and larger	4" and larger			
1500#	6" and larger	• 4" and larger			
2500#	6" and larger	4" and larger			

- Wafer Type of check valves may be used in sizes 6" and larger with drilled and tapped with 3/4" connection, subject to Engineer's approval.
- Other types of valves (Diaphragms, 3-way, 4-way, etc.) may be considered for special applications or services.
- Flanged valves shall be in place of socket-weld or screwed valves in 1" and 1-1/2" sizes when mounted directly to flanged vessel, vent, drain and level control connection. Rating of valve(s) must match nozzle connection.
- Valves trim shall be as specified in the individual line classes except where preferred trims, such as Monel; are indicated on drawings. Substitutions shall be subject to Engineer's approval.

9.6 Pipe

9.6.1 Steel pipes

- All steel pipes shall conform to requirements of related ASTM , API and IPS Standards
- Pipe wall thickness shall be designed as per below:
  - C.S, LTCS, Alloy Steel
  - 150# , 300#

    To size 24" based on ASME 16.5 pressure class

    Above Size 24" based on design condition
  - 600#

    To size 12" based on ASME 16.5 pressure class

    Above Size 12" based on design condition
  - Stainless Steel
  - 150# , 300#

    To size 12" based on ASME 16.5 pressure class

Above Size 12" based on design condition

- 600#

To size 6" based on ASME 16.5 pressure class

Above Size 6" based on design condition

- The minimum thickness for C.S pipes up to 1 1/2" shall be schedule 80
- The minimum thickness for S.S pipes up to 1 1/2" shall be schedule 10S.
- For process and/or corrosive lines, C.S pipe up to 20" shall be seamless and above shall be LSAW.
- For non corrosive process and utility lines, C.S HFW/LSAW pipes may be used.
- Pipe ending: up to 2" shall be plain ends (PE) and above shall be bevel ends(BE).
- Pipe nipples for vents, drains, pressure tappings, sample points, (excluding connections from orifice flanges, carriers and other instrumentation) shall be minimum 100 mm length and sch 80 wall thickness.

9.7 Flanges and Fittings

All pipe flanges and fittings shall conform to requirements of IPS-M-PI-150.

9.7.1 Fittings

- Long radius (R= 1.5 D) butt-welding elbows shall be used wherever possible. Unless otherwise specified, flanged elbows shall not be used.
- When weld fitting thickness is specified "Wall thickness to match pipe" fittings of commercially available weights shall be used, even though wall thickness of such fittings may be slightly greater than the pipe. Ends of fittings shall be taper bored if thickness exceeds pipe wall by more than 1/16".
- Butt-weld seamless fittings shall be used up to and including 20".
- Use 3000# screwed fittings (not seal-welded) for open end vent and drain piping downstream of block valves.

9.7.2 Flanges

- Raised Face (RF) flanges shall be used up to pressure rating 600# and for design temperatures not exceeding 450 ^{o}C .For above 600# and/or design temperatures exceeding 450 ^{o}C, ring type joint (RTJ) shall be used unless otherwise specified.
- All flanges shall be specified with bore to match I.D. of pipe.
- Slip-on flanges may be used where the following requirements are met :

  i. Carbon steel piping

  ii. Pipes handling non-toxic fluids

  iii. Pressure - temperature conditions are within the ANSI 300 LB rating.

  iv. Design temperature exceeds minus 20 ^{o}C

  Slip-on flanges of austenitic stainless steel may be used within the limitations of item ii. through iv. above, if justified from the cost point of view.

9.7.2.1 Flange facing finish

- Flat face flanges shall be used for connecting flanges to flat face cast iron piping components and equipment. In this case, gaskets shall cover the whole flange face.
- All raised face flanges shall be serrated and finished as indicated in table 1 of MSS-SP6.

9.8 Blinds

a) Thickness of blinds (spectacle or vapor) shall be in accordance with IPS-D-PI-120 and IPS-D-PI-148.

b) Spectacle Blind size DN 300 (NPS 12) and larger shall be supplied with jack screws.

9.9 Branch Connections

The principle is as follows:

Header of Lines	Branches	Use the Following
1 1/2" and Smaller	Reducing	Reducing Tee
1 1/2" and Smaller	Same Size	Equal Tee
2" and Larger	1/2" through 1 1/2"	Sockolet, Therdolet
2" and Larger	Same Size	Equal Tee
2" to 24"	Reducing	Reducing Tee (According to ASME B 16.9) (1)
24" and Larger	Reducing (Up to 8")	Weldolet (2)
24" and Larger	Reducing (12" and above)	Reducing Tee (According to ASME B 16.9) (1)

Note 1:

Pipe to pipe/weldolet connection may be used instead of Reducing Tee unless otherwise specified.

Note 2:

If specified pipe to pipe connection may be used instead of weldolet.

- Reinforcement requirements for 90 degree pipe to pipe branch connections shall be checked against the design limits of the piping class in accordance with ASME B 31.3.

9.10 Pipe Bends

In the steam tracing lines, pipe bends (seamless pipe only) may be used in place of standard fittings unless otherwise indicated.

Bend radius of pipe shall be a minimum of 5 times the nominal diameter.

9.11 Thread Compound

Thread compound requirements, unless otherwise specified in the individual Line Class, shall conform to the following:

Pipe Threads	
To 232 ºC	Teflon Tape
Above 232ºC	Armite No. 250 “Led-plate”/ equivalent

Bolt Threads	
For all lines 177ºC and higher and for Line Classes 600#	Armite No. 250 “Led-plate”/ equivalent and higher

9.12 Gaskets

- Gaskets shall be asbestos free material.
- For utility service up to 300# Non-Asbestos (Non-Graphite) Flat Sheet (Thk: 1.5 mm) should be used.
- For utility services above 300# and process lines up to 600# spiral wound gasket (Thk: 4.5 mm) shall be used.
- Spiral-wound gaskets on RFS flange must have internal retaining ring.

10. SELECTION OF BASIC MATERIAL

In consultation with the process designer or process engineer, the materials engineer shall establish the preferred materials selection based on the process requirements such as medium, pressure, temperature, flow and the environment of the process facility. Design life and cost considerations shall also be taken into account in this respect.

10.1 Corrosion allowance different from that shown in the line class shall be indicated on the related P & ID drawing.

10.2 Unless otherwise specified, Corrosion allowance shall be minimum 1.6 mm for CS and low Alloy Steel and 1 mm for S.S.

11. COLOR CODING

The materials shall be color coded as per project specifications.

12. MATERIAL NOT COVERED BY PIPING MATERIAL SPECIFICATIONS

Special piping items are referred to as SP's (Specialty Items). They are assigned an Item Code Number, listed in the specialty Item List and on P&I Diagrams.

13. RUBBER AND CEMENT LINING FOR PIPING SYSTEM

The general requirements for rubber/cement-lined piping system shall be according to IPS-E-TP-350 and IPS-C-TP-352.

14. PROVISION OF STRAINERS AND FILTERS

Provision of strainers and filter shall be in accordance with IPS-G-PI-230.

15. NON METALLIC PIPE AND FITTINGS

The general requirements for non metallic piping system shall be according to Appendix J of this IPS standard.

Note:

The company shall modify part II and III according to design basis as specified in this part (part I) of standard.

APPENDICES

APPENDIX A

SUMMERY OF ISSUED PIPING CLASSES

Material	Piping Class	ANS class rating					
		150 A	300 C	600 F	900 G	1500 H	2500 J
Carbon Steel	N01	*	*	*	*	*	*
	N02	*	*				
	N04	*	*	*	*	*	
	N05	*	*				
	N06	*	*				
	N07	*	*	*	*		
	N09	*					
	N10	*	*	*	*	*	
	N12		*				
	N14		*	*	*	*	
	N16		*				
Alloy Steel	P02		*	*	*	*	
	P04	*	*	*			
	P05						*
	P06			*	*		
Stainless Steel	S02	*	*	*	*		*
	S04	*	*	*			
	S05	*	*				
	S06		*	*	*	*	
	S07		*	*	*		*
Aluminum	T						
Copper-based Alloys	V						
Nickel & Nickel-based Alloys	W						
Non-metallic Materials	X01	*					
Carbon Steel with Lining	Z01	*					
	Z02	*					
	Z03	*					
	Z04	*					
	Z05	*					

APPENDIX B

SERVICE INDEX [1)]

SERVICE		RECOMMENDED		REMARKS	See Note
Medium	**Properties**	**Temp. limits (°C)**	**Piping Class(es)**		
Acetic acid	All concentration	0 – 100	S02		
Acetone		0 – 100	N01		
Acetonitrile		0 – 130	N01		
Air Air	Instrument-Tool Instrument-Tool	0 - 200 0 - 100	N01 Z01		
Allyl chloride	Wet	0 - 20	X01		
Ammonia Ammonia	Aqueous Gas, dry and wet	0 - 165 0 - 100	N02 N02		
Aviation alkylate		0 - 120	N02		
Benzene		0 - 85	N01		
Butane Butane Butane	Gas Liquid	0 - 340 0 - 40 -50 - 50	N01 N02 N07		
Butanol		0 - 200	N01		
Butylene Butylene	Gas	0 - 140 -50 - 100	N01 N07		
Clacium carbonate Clacium chloride Clacium hydroxide	Aqueous Aqueous Aqueous	0 - 50 0 - 50 0 - 50	N02 N02 N02		
Carbon dioxide Carbon dioxide	Dry Wet	0 - 350 0 - 100	N01 S02		
Chlorine Chlorine Chlorine Chlorine	Gas, dry Gas, wet Gas, wet Liquid, dry	-35 - 70 0 - 50 0 - 150 -35 - 70	N16 Z02 Z04 N16		
Condensate	Steam non-aerated	0 - 250	N10		
Coolant	60/40 % H_2O/Methanol	-50 - 50	N07		
Diethanol amine Diethanol amine	Dry Water	0 - 150 0 - 150	N02 S02		
Diethylene glycol Diethylene glycol	All concentrations – Dry	0 - 150 0 – 150	N01 S02	To prevent product contamination	
Dimethylketone	Water	0 – 100	N02		
Diphenyl propane		0 - 140	S02	Final product DPP plant	

(to be continued)

APPENDIX B (continued)

SERVICE		RECOMMENDED		REMARKS	See Note
Medium	**Properties**	**Temp. limits (°C)**	**Piping Class(es)**		
Ethane		-90 – 150	S04		
Ethanol		0 – 100	N01		
Ethylene		-140 – 150	S04		
Ethylene oxide Ethylene oxide	CO_2, water	0 - 150 0 - 200	S05 S05		
Foam, fire fighting	Concentrate	0 - 50	S02	DN 15-80	
Formic acids	All concentrations	0 - 30	S02		
Fuel gas	Wet H_2S		N02	Severity category VERY LOW	
Fuel oil	Sulphur compounds	0 - 330	N01		
Gas oil		0 - 200	N01		
Gasoline		0 - 100	N02		
Heat transfer fluid	Downtherm	0 - 390	N03		
Hydrocarbons Hydrocarbons Hydrocarbons Hydrocarbons Hydrocarbons Hydrocarbons Hydrocarbons Hydrocarbons	non-corrosive LPG LPG with mod. sev. H_2S LPG with or withut wet H_2S With mod. sev. wet H_2S With high severity HIC With S and/or NA With S and/or NA	0 - 330 0 - 200 0 - 200 -50 - 150 0 - 200 0 - 200 0 - 240 240 - 450	N01 N02 N04 N07 N04 N06 N01 P04	 Moderate sour Low temp, non-sour or moderate Sour Moderate sour High sour Corrosion rate must be checked	
Hydrochloric acide Hydrochloric acide	All concentrations All concentrations	0 - 30 0 - 150	X01 Z04		
Hydrogen Hydrogen Hydrogen	With or withut wet H_2S no H_2S With H_2S	0 - 230 230 - 450 230 - 538	N14 P06 S07	Moderate sour Check API 1941 for pres./temp. limit	
Hydrogen chloride Hydrogen chloride Hydrogen fluoride Hydrogen peroxide Hydrogen sulphide	Gas, dry Gas wet With or without hydrocarbon Up to 98% Gas, dry	0 - 100 0 - 50 0 - 200	N01 X01 N12 P02 N04	 See App. G Consult corrosion eng.	
Isobutyl alcohol Isopropyl alcohol	Finished product	0 - 100 0 - 100	N01 N01		
Luboil and seal oil		0 - 200	S02	To prevent product contamination	
Methane		-200 - 150	S04		
Methan		0 - 100	N02		
Methanol Methanol		0 - 100 50 - 150	N02 N07		
Methyl ethyl ketone		0 - 100	N01		
Methyl hexanol Methyl mercaptan Naphtha Naphthenic acide		 0 - 30 0 - 340 0 - 95	N02 N02 N01 N02	Consult corrosion engineer	

NA = Naphta

HIC = Hydrogen Induced Cracking

(to be continued)

APPENDIX B (continued)

SERVICE		RECOMMENDED		REMARKS	See Note
Medium	Properties	Temp. limits (°C)	Piping Class(es)		
Nitrogen	Liquid	200 - 150	S04		
Nitrogen		0 - 340	N01		
Nitrogen		0 – 200	N02		
Phenol		0 - 200	N01	To prevent product contamination	
Phenol		0 - 150	S02		
Phosphoric acid	All concentration				
Polyols	Acidic or alkaline	0 - 200	S02		
Polypropylene		0 - 200	N01		
Potassium hydroxide				Consult corrosion engineer	
Propylene	Liquid	-100 - 150	S04		
Seal oil			S02		
Secondary butyl alcohol		0 - 200	N01		
Sodium hydroxide (caustic soda)				Consult corrosion engineer	
Steam	Saturated/superheated	0 - 400	N10		
Steam	Superheated	400 - 450	P02		
Steam		400 - 538	P05		
Sulphur	Dry	0 - 150	N01		
Sulphur trioxide	Dry gas	0 - 340	N01		
Sulphuric acid	> 65% wt	0 - 60	N05		
Water, boiler feed	Demineralized aerated	0 - 150	S02		
Water, boiler feed	Treated non-corrosive	0 - 250	N10		
Water, boiler feed		0 - 75	Z02	For existing systems only	
Water, cooling	Brackish-/seawater	0 - 50	Z03		
Water, cooling	Treated	0 - 60	N09		
Water, demineralized			S02		
Water, demineralized	Process use	0 - 80	Z02	For existing systems only	
Water, fire fighting	Brackish-/seawater	0 - 45	Z03		
Water, fire fighting	Brackish-/seawater	0 - 50	Z05	For above ground systems only	
Water, fire fighting	Fresh	0 - 50	N09	Check oxygen and corrosion rate/life	
Water, fire fighting	Piping normally dry	0 - 50	Z01	For above ground systems only	
Water, potable	Fresh, treated	0 - 20	Z01		
Water process	Demineralized	0 - 80	Z02		
Xylene		0 - 340	N01		

Notes:

1) Since concern of service index is material group and service conditions, piping class indicated does not bear prefix for pressure rating.

2) At higher temperatures, corrosion due to carbonyl formation may increase significantly; consult materials/corrosion engineer.

3) Design temperature is limited in accordance with API publication 941 (Nelson curve).

4) For steam jacketing (piping class) should be referred to N10.

5) For extended service limit (for temperature up to 540°C) refer to Appendix J.

Note:
This part shall be modified according to design basis as specified in part I of this standard.

APPENDIX C

TEMPERATURE AND CAUSTIC SODA CONCENTRATION RANGES FOR METALLIC PIPE, FITTINGS AND VALVES

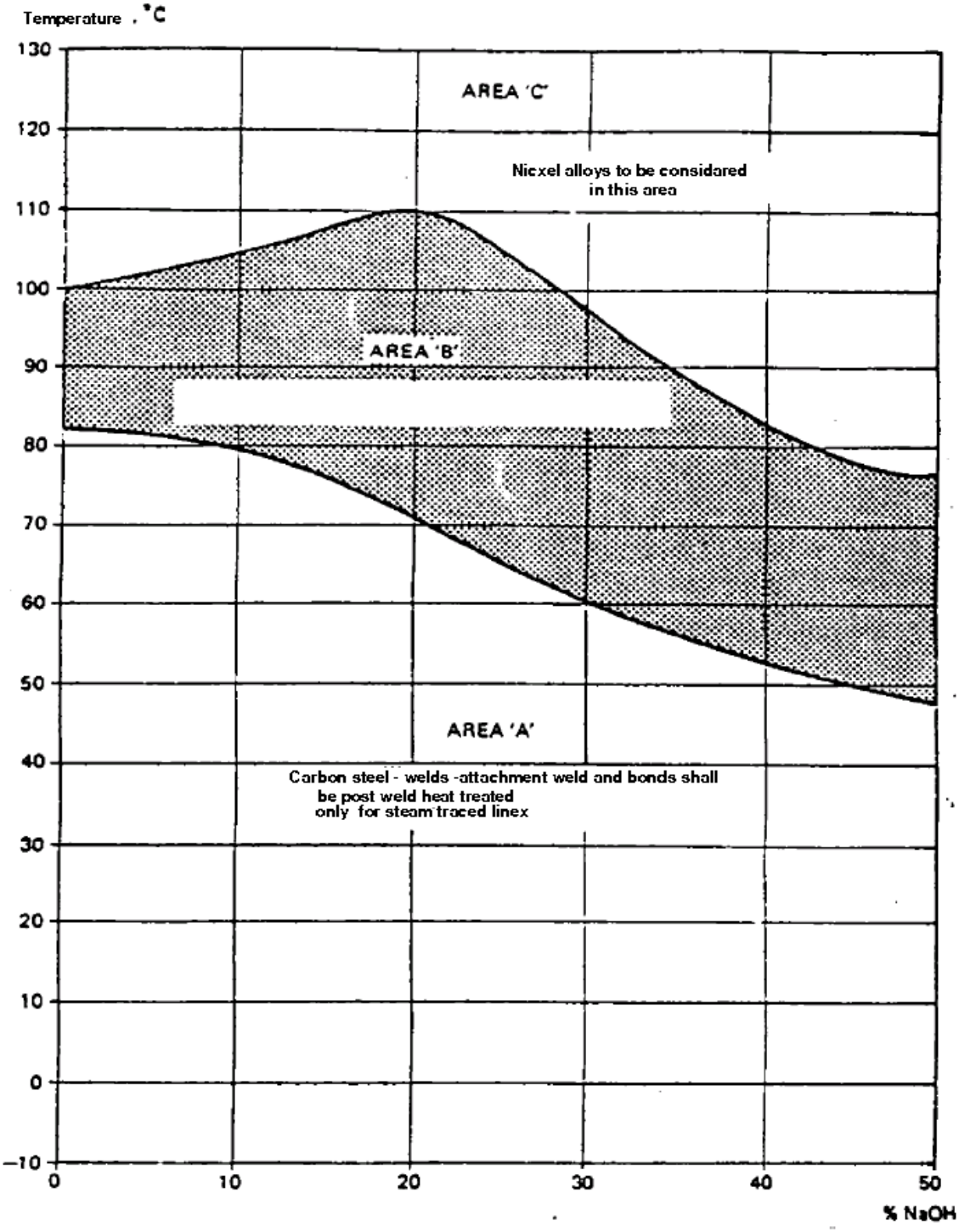

(to be continued)

APPENDIX C (continued)

GENERAL REQUIREMENTS FOR CARBON STEEL PIPING IN CAUSTIC SODA SERVICE

Requirements to prevent caustic soda embritlement in carbon steel piping are given below:

C.1 Design

C.1.1 For area "A", non-heated lines, no requirements.

C.1.2 For area "A", steam-traced lines, stress-relief for welds, attachment welds and cold-formed bends.

C.1.3 For area "B", all lines, stress-relief for welds, attachment welds and cold-formed bends.

C.1.4 Design piping systems for furnace post-weld heat treatment (pwht) preferably, i.e. with flanges, so as to enable placing in a furnace.

C.1.5 Particularly intricate parts such as valve and pump manifolds should be designed for furnace pwht.

C.1.6 If field pwht is unavoidable, ensure that areas and parts to be heat-treated, are readily accessible.

C.1.7 Restrict the application of cold-formed parts resp. cold forming during fabrication.

C.1.8 Exclude hot spots by direct wall-to-wall contact in the case of steam or electrical traced lines by application of spacers (ceramic, glass fiber or filled phenolic resin).

C.1.9 Include the design of steam or electrical tracers. Fixation points for tracers to be at a distance of 6.5 m max. with special attention at bends and fittings.

C.1.10 Drawings

All drawings for the fabrication of carbon steel piping intended for caustic soda service shall be clearly marked "CAUSTIC SODA SERVICE".

C.2 Fabrication

C.2.1 Welding

Inert gas or CO_2-shielded arc welding shall be used for the root pass. Welds shall be made without excessive penetration (max. 2 mm) and shall be without grooves and/or craters. Pipework shall be inspected after welding.

C.2.2 Installation

Hanger supports shall be clamped around the pipes and bolted. Strips of CAF or glass-fiber material shall be applied between pipe and support. All indications given for the design of traced lines shall be followed closely.

C.2.3 Ensure that all attachment welds are made before pwht is applied.

C.3 Examination

C.3.1 Visual examination of all welded piping parts shall be done during fabrication by an experienced inspector.

C.3.2 A minimum of 10% of all welds shall be checked by radiography before post-weld heat treatment. All defects shall be repaired to fulfill minimum requirements.

(to be continued)

APPENDIX C (continued)

C.4 Heat Treatment

C.4.1 Welds, attachment welds and cold-formed piping parts shall be given a stress relief post-weld heat treatment.

C.4.2 This heat treatment shall be carried out in a furnace or, if required, by electric induction heating.

C.4.3 Heat treatment shall be in the range of 580 to 620°C with a holding time of 3 minutes per mm thickness and a minimum holding time of 1 hour. Cooling shall be controlled at a rate of 100°C per hour down to 350°C.

C.4.4 The complete post-weld heat treatment cycle shall be recorded.

C.5 Testing

C.5.1 All piping parts shall be hydraulically tested after heat treatment.

C.5.2 The hydrostatic test pressure to be used shall be 1.5 times the maximum allowable pressure at ambient temperature, as mentioned in the relevant piping classes.

C.5.3 Ensure that draining and drying after testing is carried out properly.

C.6 Identification

C.6.1 All piping fabricated in accordance with this Standard shall be clearly identified by a suitable marking either by painting or fixing an adhesive tape around the parts.

C.6.2 Pipe class number and line designation shall be painted on each part.

APPENDIX D

GENERAL REQUIREMENTS FOR CARBON STEEL PIPING IN SULPHURIC ACID SERVICE

Carbon steel piping systems in sulphuric acid shall be designed in accordance with the rules given below:

D.1 Design

D.1.1 Flow rate

Piping shall be sized for a nominal velocity of 0.75 m/s in straight ends.

D.1.2 Flow changes

Pipework design shall be studied carefully to avoid sudden changes in the directionflow, turbulences and extreme changes in velocity.

D.1.3 Drainage falls

Horizontal runs of pipework shall be avoided. Generous falls for self-draining purposes shall be provided for, wherever possible. The fall shall be minimum 1 cm/m.

D.1.4 Pipe bends and elbows

Pipe routings shall be studied with the aim to reduce the number of bends and to restrict the number of elbows to the bare minimum.

Pipe bends shall have a radius R = 5 D where D is the nominal pipe diameter. Standard elbows, which shall be used for sweep-in connections, shall be long-radius type R = 1½ D. Short-radius elbows (R = D) shall not be used.

D.1.5 Pipe reducing

Reducers shall be avoided as much as possible. Where a reduction is necessary, the reducer shall be concentric, the reducing part shall be smooth and the reduced diameter bore shall correspond to the connecting part or be tapered to suit that bore.

D.1.6 If reducing is upstream, an eccentric reducer may be considered to ensure the required fall for drainage.

D.1.7 Junctions

Pipework shall be designed to avoid 90° tee junctions, instead 45° laterals; Y-type or sweep-in junctions shall be used.

D.1.8 Spool pieces

Whenever turbulences or considerably higher velocities cannot be avoided, the use of spool pieces shall be considered. These can be made out of solid, fully-resistant alloys or carbon steel, lined with fully-resistant material. Length of spool pieces to be L = 20 D where D is the nominal pipe diameter.

(to be continued)

APPENDIX D (continued)

D.1.9 Post-weld heat treatment

Pipe sections of intricate shapes, which are not accessible for finishing and/or where turbulences and velocity changes are most likely, e.g. valve and pump manifolds, shall be designed as flanged sections, such to enable pwht in a furnace.

D.1.10 Butt welding

Pipework shall be designed to restrict the number of butt welds which are not accessible for finishing and inspection of the inner surface. Misalignment of individual and adjoining pipe bores shall not exceed 0.3 mm.

D.1.11 Flanges

Flanges shall be installed to enable access to welds for finishing and to fabricate flanged pipe sections, junctions, reducers and other special pipe parts. Welding neck flanges shall be used. In exceptional cases the use of slip-on flanges may be considered.

D.1.12 Gaskets

Flat ring gaskets, with ID dimensions exactly equal to the bore of the pipes shall be used. The OD dimensions shall be in accordance with ANSI/ASME B 16.21. Gasket thickness to be 1.5 mm. Gasket material to be specified for sulphuric acid service. Attention shall be given that not all acid-resistant type gaskets are suitable.

D.1.13 Drawings

All drawings for the fabrication of carbon steel piping intended for acid service shall be clearly marked "SULPHURIC ACID SERVICE".

D.2 Welding

Inert gas or CO_2 shielded arc welding shall be used for the root pass. Where the weld metal penetrates to the bore of the pipe and/or fitting, great care shall be taken to ensure full penetration without excess penetration. The internal bore at the location of the welds shall be dressed flush with the inner pipe wall.

Permanent backing rings shall not be used.

D.3 Examination

D.3.1 Visual examination of all welded piping parts shall be done during fabrication by experienced inspectors.

D.3.2 A minimum of 10% of all welds shall be checked by radiography. Radiographing shall be done after the welds have been dressed. All defects shall be repaired to fulfill the minimum requirements.

D.4 Heat Treatment

D.4.1 A normalizing heat treatment shall be applied to sections of intricate shape, e.g. valve and pump manifolds, and sections where high heat input on welding or extreme stresses on forming have been introduced.

(to be continued)

APPENDIX D (continued)

D.4.2 Heat treatment conditions:

- normalizing temperature 900-930°C;
- holding time 3 minutes per mm thickness with a minimum of 1 hour;
- cooling in still air.

Attention shall be paid to adequate support of the piping sections during normalizing to prevent excessive deformation and/or warping.

D.5 Testing

D.5.1 All piping parts shall be hydrostatically tested after post-weld heat treatment.

D.5.2 The hydrostatic test pressure to be used shall be 1.5 times the maximum allowable pressure at ambient temperature, as mentioned in the relevant piping classes.

D.5.3 Ensure that draining and drying after testing is carried out properly.

APPENDIX E

CONSTRUCTION AND WELD DETAILS FOR CARBON STEEL PIPING IN SULPHURIC ACID SERVICE

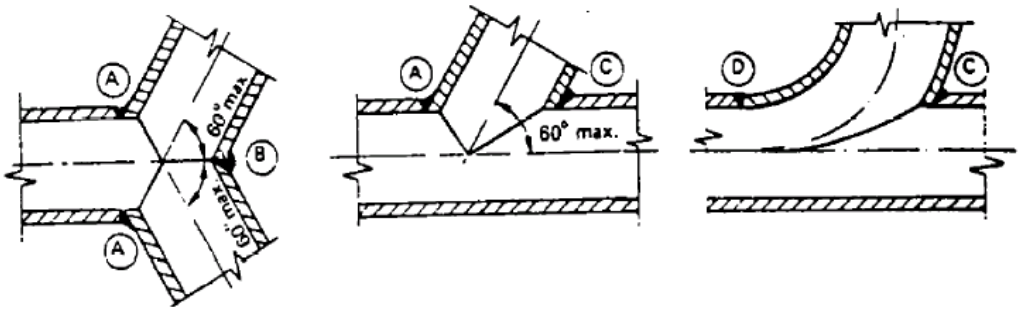

Y Junction Lateral Sweep-in

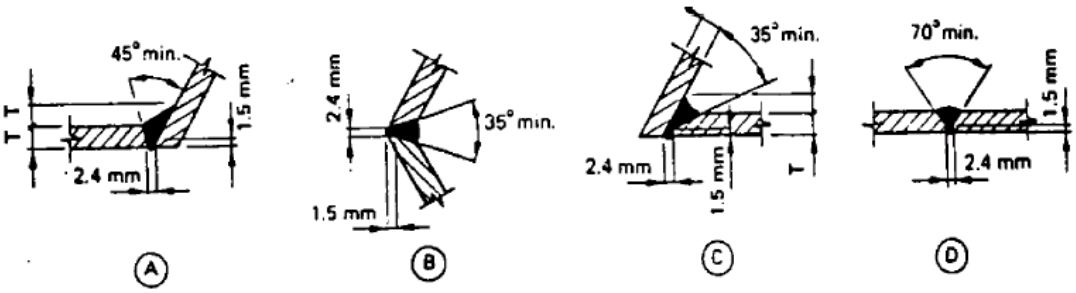

Weld Details

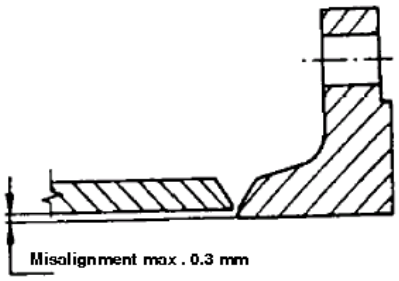

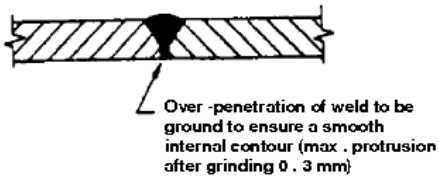

Misalignment of Bore for Butt Jointing

Finishing of Butt Weld

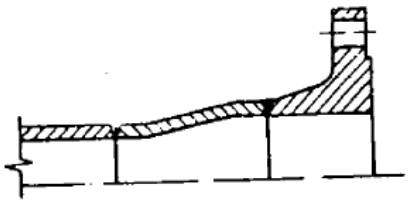

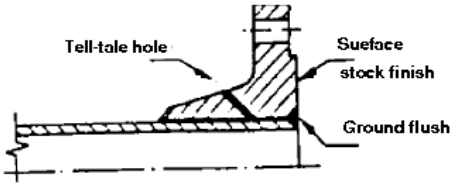

Reducer Assembly **Slip-On Flange Assembly**

APPENDIX F

GENERAL REQUIREMENTS FOR CARBON STEEL PIPING IN DRY CHLORINE SERVICE

This Appendix provides requirements for the design, and testing of piping systems for "dry" chlorine, in either the liquid or gaseous phase, at temperatures between -50°C and +70°C. "Dry" chlorine contains less than 150 mg/kg water.

F.1 Design

F.1.1 Materials for process piping in chlorine service, are specified in piping Class CN16. Liquid chlorine shall be considered to be a "(toxic) lethal" substance.

F.1.2 Only schedule 80 seamless pipe of minimum DN 20 (NPS ¾) should be used to ensure rigidity and protection against mechanical damage which may result in leaks.

F.1.3 Piping DN 25 (NPS 1) is adequate for all normal flows.

F.1.4 Piping arrangements shall be as simple as possible, with a minimum of welded or flanged connections. For piping of DN 100 (NPS 4) and smaller, elbows shall preferably be made by bending. Threaded joints shall not be used. All welds shall be butt welds. No socket welding fittings, bosses and weldolets shall be used where a fillet weld will be applied.

F.1.5 Liquid chlorine has a high coefficient of thermal expansion. If liquid chlorine is trapped between two valves, and expands enough pressure is created to burst the pipe. Therefore each line or line section shall have an expansion chamber, a pressure relief valve or rupture disc discharging to a receiver.

The expansion chamber capacity shall have at least 20% of the section volume and be based on a temperature rise of 27°C above the ambient temperature.

F.2 Manufacturing

F.2.1 Assembly of piping components

For the assembly of all piping components, pipe ends, fittings and welding neck flanges to be butt-welded, a uniform root opening, as specified below, is required:

NOMINAL PIPE SIZE	ROOT OPENING
Smaller than DN 50 (2 in.)	1.5 mm
DN 50 - 250 (2-10 in.)	1.5-2.5 mm
DN 300 (12 in.) and larger	2.5-3.5 mm

F.2.2 Alignment

Alignment shall be in accordance with ANSI B 31.3 but with the exception that the internal trimming shall be 1:4, instead of 30°C.

(to be continued)

APPENDIX F (continued)

F.2.3 Bending

1) Pipes may be bent in the hot or cold condition.

2) A normalizing heat treatment shall be applied if the Flattening deformation is more than 5%.

3) No heat treatment is required for hot-formed bends upon which the final forming operation is completed at a temperature above 620°C and below 950°C provided they are cooled in still air.

When hot bending is carried out outside the temperature range given above, a separate normalizing heat treatment at 900-950°C is required.

F.2.4 Welding

- Field welds shall be kept to a minimum and shall be carried out under fair weather conditions only.
- Permanent backing rings shall not be used.
- Post-weld heat treatment is not required.
- Cracked tack welds shall be removed using the same procedure.
- Temporary tack welds should not touch the root gap or the root face.
- For temporary tack welding, the use of "bridge pieces" is recommended to avoid damage to the root face of the gap area.

Welding processes - For pipe sizes DN 50 (2 in.) and smaller, the "gas Tungsten arc welding process" shall be applied. Larger sizes should be "gas Tungsten are welding", but shielded metal are welding may be used.

Procedures and welders shall be qualified and approved by the principal before actual production welding starts.

Welding consumables - An alternative possibility is the procurement of consumables directly from the manufacturer complete with certificates. These certificates should give information per batch on chemical composition and mechanical properties of the weld deposit.

Final approval of welding consumables for a particular job will follow through meeting the test requirements of the welding procedure qualification.

Inspection of welds - All welds shall be 100% radiographed.

The method of radiography to be employed for inspection should be in accordance with ASME Section V.

Acceptance criteria of welds shall be in accordance with ANSI B 31.3, Table 327.4.1A "Limitation on Imperfections in Welds".

F.3 Hydrostatic Testing

The hydrostatic testing shall be carried out according to IPS-C-PI-350 before the system is cleaned and dried. For piping Class CN16 the hydrostatic test pressure shall be at least 45 bar (1.5 times the pressure of the service limits).

(to be continued)

APPENDIX F (continued)

F.4 Final Cleaning and Drying after Welding and Testing

F.4.1 Chlorine may react with oil. Therefore, in addition to requirements cited in IPS-C-PI-410 cleaning shall be accomplished by pulling through each pipe section a cloth saturated with trichloroethylene or other suitable chlorinated solvent. Hydrocarbons or alcohol shall never be used, because remnants of these solvents react with chlorine.

Cleaning and drying are accomplished by passing steam through the line from the high end until the entire line is hot to the touch (approximately 60°C). Condensate and any foreign particles (such as oil or metal) shall be drained out after the steam supply line has been disconnected and all pockets and low spots have been drained.

While the line is still warm, dry air shall be blown through the line until the dew point of the discharged air is the same as that of the air blown into the system, e.g. minus 40°C or below. When drying is finished, the line shall be kept closed in order to prevent re-entry of atmospheric moisture.

F.4.2 Gas testing

The dried piping system shall be pressurized to 10 bar ga with dry air or nitrogen and tested for leaks by the application of soapy water to the outside of joints. Afterwards, chlorine gas may be introduced and the system re-tested for leaks as described below.

F.4.3 Detection of chlorine leaks

The location of a leak in a chlorine-containing system can be detected by the reaction of ammonia vapor with the escaping chlorine. The reaction gives a dense white cloud.

The most convenient way is to direct the ammonia vapor at the suspect leak employing a plastic squeeze bottle containing aquous ammonia. Do not squirt liquid aquous ammonia on pipe and fittings.

F.4.4 Repairs

Repairing a leak may require welding. Before any welding is started, all piping shall be thoroughly purged and checked for the thoroughness of the purge (inside and around the pipe) with an explosion meter. Carbon steel ignites in chlorine of 250°C, thus welding without purging could start a fire. Purge with dry air and continue a small flow of air during the welding operation.

APPENDIX G

GENERAL REQUIREMENTS FOR PIPING IN HYDROGEN FLUORIDE (HF) SERVICE

G.1 General

Mixtures of hydrogen fluoride, hydrocarbons (and some water) as they occur in the HF alkylation process for the production of iso-octane and detergent alkylates. The following mixtures can be contained in carbon steel:

- Hydrocarbons 33% HF and traces of water up to 70°C and 6 bar,
- Hydrocarbons 4% HF and traces of water up to 160°C and 3 bar.
- Hydrocarbons and traces of HF, up to 200°C and 3 bar.

G.2 Design

Piping Classes:

Class CN12 ASTM A 333 Gr. 6, 3 mm corrosion allowance, temperature limits 0-200°C, specially meant for operation below 45°C.

G.2.1 Hydrogen fluoride is considered a lethal substance, and all piping that operates below 45°C or may reach such low temperatures during any stage in operation shall be made of notch-ductile materials. Classes CN12 fulfill that requirement.

G.2.2 The use of bellows is prohibited. Screwed connections shall not be used, all connections shall be welded or flanged. Flange connections shall be reduced to the least possible number to avoid leakages.

G.2.3 Most bolting materials (Cr-Mo steel, stainless steel, Monel) may be susceptible to stress corrosion cracking if exposed to HF. Therefore flanged connections shall not be permitted to leak and the edge of all flanges shall be painted with one coat of Socony HF Detecting Paint No. 20-Y-15 for the detection of HF leaks. Hence, flanges shall not be insulated.

G.2.4 For safe and easy handling during operation and (downhand) maintenance all valves and instruments shall be located at an elevation of maximum 1 meter above the floor.

G.2.5 To avoid that possible deposition of iron fluoride may hamper the operation, the valve types shall be selected as follows:

- Globe valves with Monel trim and soft seats (PTFE) for valves in normally closed position.
- Ball valves with Monel Ball and seats for valves in normally open position.

G.2.6 All HF service piping shall be installed above grade and shall be self-draining to the necessary low point bleeders.

To minimize the number of low point bleeders, piping should drain into equipment if possible (vessels, heat exchangers, pumps, control valves).

G.2.7 Process line size should be minimum DN 25. Drains, vents, bleeders, etc., may be made minimum DN 20. All control vales in HF service shall be installed with block valves and by-pass globe valve and shall have a flush connection on either side of the control valves. Gage glasses shall be provided with a protective cover of KEL-F or PTFE.

G.2.8 Equipment in HF Service is normally post-weld heat treated, this is not required for piping.

(to be continued)

APPENDIX G (continued)

G.3 Identification

All piping fabricated to this Standard shall be identified by a clear and suitable marking, either by painting or fixing an adhesive band around the pipe.

Pipe class number and line designation number shall be painted on each pipe piece.

G.4 Operation and Maintenance

The wearing of protective clothes, gloves, goggles, etc., shall be prescribed and it shall be ensured that all safety instructions are strictly observed.

Before breaking flanges of piping that have been in HF service neutralization by means of ammonia or sodium bicarbonate is required to prevent HF contact with the skin. Even if no severe corrosion is experience fouling and heavy iron fluoride deposits are often present.

Neutralization of such thick fouling layers is rather difficult and upon subsequent mechanical removal acidic conditions may again be encountered underneath due to insufficient neutralization. If the acidity is such that it is unsafe to continue work, a second neutralization is recommended.

APPENDIX H
GENERAL REQUIREMENTS FOR RUBBER LININGS FOR PROCESS EQUIPMENT AND PIPING

H.1 SCOPE

This Appendix covers both the general requirements for the purchase and related testing, inspection transportation and storage of vulcanized and non-vulcanized rubber-lined process equipment and piping, both shop fabricated and in-situ.

H.2 MATERIALS

H.2.1 General

The following rubber types are used for lining purposes (classification in accordance with ASTM D 1418):

- Natural rubber (NR)
- Synthetic polyisoprene rubber (IR)
- Styrene-butadiene rubber (SBR)
- Chloroprene rubber (CR)
- Butyl rubber (IIR)
- Nitrile rubber (NBR)
- Ethylene propylene rubber (EPM and EPDM)
- Urethane rubber
- Chlorosulphonated polyethylene (CSM)*
- Fluoro rubber of the polymethylene type (FKM)**

* Commercially available under the registered trade mark "Hypalon"

** Commercially available under the registered trade mark "Viton"

Ebonites are rubbers with a hardness value of at least 60° Type D Shore and can be produced from NR, IR, SBR, NBR or blends thereof.

H.2.2 Material Selection

The final selection of the type and thickness of the rubber lining, and the method of application, shall be made in conjunction with the materials specialist and the lining contractor.

The following details shall be included on the requisition of the equipment concerned:

- products to be handled
- temperature
- degree of vacuum or pressure
- cycle of operations
- abrasion and erosion aspects

} minimum, maximum, normal .

- immersion conditions.

H.2.3 Quality of Rubber

The grade of rubber shall be specified on the requisition sheet. The lining contractor shall state that the lining will satisfy the chemical and physical conditions specified with respect to the agreed service lifetime.

The manufacturer shall supply the specification for the approved rubber compound and samples of the vulcanized rubber sheet for test and reference purposes. The specification of the rubber compound shall not be changed without prior written approval from the principal.

(to be continued)

APPENDIX H (continued)

H.3 DESIGN AND FABRICATION

H.3.1 General

The fabrication of the equipment shall be in accordance with BS 6374: Part 5 or DIN 28051 and DIN 28055.

The important points are:

- the surface must be accessible for manual working;
- the weld seams must be continuous, smooth and free from pores and, if necessary, machined or ground (H.3.3);
- (steel) reinforcements should, if possible, be situated on the outside.

All branches shall be flanged and the lining shall be taken over the flange face to prevent ingress of the process liquid behind the lining.

For typical flanged connections in equipment see Drawing No. H-7.

For typical flanged connections in piping see Drawing Nos. H-1 and H-6.

For standard lengths and dimensions of piping and piping elements see Drawing Nos. H-4 and H-5.

Sharp changes of contour in the surface to be lined shall be finished to a suitable radius, such that the internal radius of the lining not less than 3 mm. Air vent holes to prevent air trapped in welded joints may sometimes be necessary, see Drawing No. H-2.

H.3.2 Surface Finish of Substrate

The surface to be lined shall be smooth, free from pitting, cavities, porosity, or other surface irregularities in accordance with DIN 28053.

The surface shall also be free from oil, grease and other foreign matter. Metallic surfaces shall be blast-cleaned to a surface finish corresponding to SA 2.5 in accordance with ISO 8501-1. After this operation the surface roughness shall have a peak-to-valley height of 40 µm-100 µm, with an average of 50 µm.

Immediately after the blast cleaning of the metallic substrate the grit, dust etc. shall be removed and a layer of adhesive primer with a dry-film thickness of approximately 30 µm shall be applied.

H.3.3 Welds in Metal Substrate

All metal-to-metal joints shall be made by welding. Welds shall be homogeneous and free of pores. Welds shall be ground smooth and flush with the parent metal on the side to be covered. Wherever possible, they shall be made from the side to be lined. Where this is not possible, the root shall be chipped out and a sealing run shall be applied. Internal corner and tee joints shall be welded with full penetration.

Welds shall be ground smooth and concave to the required radius (H.3.1). Welds shall be examined according to applicable design codes. Drawing No. H-2 shows acceptable welding details.

H.3.4 Joints in Rubber Lining

Overlap joints as shown in Fig. 1 of Drawing No. H-3 shall be used when joining separate sheets of unvulcanized rubber. The total contacting surface between the sheets shall be a minimum of four times the sheet thickness but shall not exceed 32 mm at any point. Where applicable, overlaps shall the direction of the liquid flow.

(to be continued)

APPENDIX H (continued)

When the total lining thickness is built up from more than one layer, only the joints in the top layer shall be of the overlap bevel type, the under layers being flush-jointed as shown in Fig. 2 of Drawing No. H-3. The relatively weak flush joint (Fig. 3 of Drawing No. H-3) is applied when the lining is used as a base for chemical-resistant brick lining. Joints in the different layers shall be staggered.

Joints between rubber pipe linings and the rubber on the flange facing shall not protrude so as to restrict the bore of the pipe or to prevent efficient sealing between the flange faces of adjacent lengths.

H.3.5 Gaskets

The selection and application of the gasket material shall be in accordance with the service conditions. Generally for hard rubber linings a soft rubber gasket is used and for soft rubber linings a CAF gasket is used.

To prevent the gasket and lining bonding together, the rubber flange facing should be lightly rubbed with colloidal graphite.

H.3.6 Painting

Unless otherwise stated, all parts which are not rubber-lined shall be degreased and blast-cleaned and painted with one coat of a suitable epoxy resin-based primer. This shall be carried out after vulcanization of the rubber.

H.3.7 Lining Application

Manufacturer's procedures for the application of the lining shall be adhered to. However, if shop vulcanization is used, the adhesive primer shall be applied immediately after preparation of the substrate. The pre-cut unvulcanized rubber sheets shall be applied without inclusion of air and with specified joints within 96 hours.

If in-situ vulcanization is carried out, the surface to be lined shall have a temperature during the application of the unvulcanized rubber sheets not lower than 10°C and the relative humidity should not be higher than 75%, i.e. water condensation on the surface shall be prevented during application.

The manufacturer shall be responsible for the type of the adhesive system used to bond the rubber lining to the substrate. He shall produce evidence that the adhesive system is suitable for the service conditions and will produce the bond required between rubber and substrate when the rubber is applied under the conditions of vulcanization.

H.4 QUALIFICATION TESTING

H.4.1 General

The principal will indicate at the time of enquiry or order whether qualification testing is required before delivery in order to establish the capabilities of the manufacturer or, for example, because of time elapsed or new developments.

At the request of the manufacturer, and after approval by principal, the tests required may be performed on products from current running stock. The number and size of the samples and the method of sampling shall be established by agreement between the manufacturer and the principal.

Tests may be performed by the manufacturer or by an independent testing organization. In both cases a certificate stating the test results shall be submitted. DIN 50049 3.1 B is acceptable for this purpose.

When the equipment is subject to a test pressure greater than 0.5 barg, the lining shall be carried out after hydrotesting.

(to be continued)

APPENDIX H (continued)

H.4.2 Rubber Lining

H.4.2.1 Rubber quality

It shall be verified that the type of rubber is correct (H.2.3). Test method ASTM D 3677 may be used for identification.

H.4.2.2 Performance of rubber

The manufacturer shall certify that the quality of the rubber will satisfy the chemical and physical conditions to which it will be exposed for the agreed operating life.

H.4.2.3 Physical properties

The physical properties of the vulcanized rubber shall comply with the values given by the manufacturer. The test methods as described in BS 903:part A2 are acceptable. These tests are carried out on separately supplied test samples. All hardness readings shall conform to the specified value within plus/minus 5°. A minimum of three readings shall be taken for each square metre of lining. For large surfaces the maximum number of readings shall be agreed upon by the manufacturer and the principal. In general, it is common to express hardness in Durometer A or Durometer D readings in accordance with ASTM D 2240.

H.4.3 Rubber-Lined Parts

H.4.3.1 Surface defects

Linings shall be free from blisters larger than 10 mm in diameter, cracks or other surface imperfections, porosity, voids

or inclusions.

H.4.3.2 Adhesion

For the determination of the adhesion to the metal substrate, samples shall be prepared from the same rubber compound used for the lining and the same metal.

The pretreatment of the metal sample shall be identical to the pretreatment of the surface of the equipment or piping. After the same vulcanization procedure, the adhesion shall be determined according to method A (for ebonites) and to method B (for soft rubbers) as described in ASTM D 429. The adhesion value calculated from the load at failure and the original bonded area shall be as agreed upon in the specification. However, unless otherwise agreed, they shall be at least 10 N/mm2 (method A) and 4 N/mm^2 (method B) respectively.

H.4.3.3 High-voltage spark

The continuity of the lining on metallic substrates shall be checked with a high-voltage spark test. Sparks shall not be produced when the lining is tested with a direct-current apparatus, using a voltage which is determined by the following formulas:

6 (1 + thickness in mm) kV which shall not exceed 30 kV.

This voltage should be adjusted for high carbon black filled (soft) rubbers to approximately 3 kV per mm thickness (exact voltage to be determined on a test sample). It is not possible to inspect antistatic linings with this test. In this case, after consultation with the Principal, the "wet sponge test", a low-voltage holiday detector shall be used.

(to be continued)

APPENDIX H (continued)

Both the methods describing the continuity testing in BS 6374:Part 5 for high frequency with an AC source and the high-voltage test in DIN 55670 are acceptable to the Principal.

H.4.3.4 Thickness

The thickness of the lining applied on substrates shall be determined with a thickness meter and shall conform to the agreed thickness with a minimum of 90% of that thickness. A minimum of three measurements per square metre shall be made. For large surfaces the maximum number of readings shall be agreed between the manufacturer and the Principal.

H.5 ACCEPTANCE TESTS AND CERTIFICATION

H.5.1 Tests

The inspector representing the Principal shall check at random whether the rubber-lined process equipment and piping meets the requirements mentioned in (H.4). In addition, the following acceptance tests shall be carried out.

if the requirements are not achieved, even after re-vulcanization, the rubber-lined item shall be rejected.

H.5.1.1 Visual inspection

The rubber lining shall be free from cracks or any other imperfections. Blisters smaller than 10 mm diameter are acceptable, unless otherwise specified. Minor wrinkles and surface markings which will not have a significant effect on the performance of the lining are also acceptable.

The total amount of repairs shall not be more than 100 cm^2 per square metre of lined surface. Lining repairs are not allowed in piping, on flange facings or on nozzle necks of equipment.

Repair of damaged rubber linings shall only be carried out by the contractor after consultation with and the agreement of the Principal.

H.5.1.2 Adhesion

The adhesion between the rubber lining and the substrate shall be homogeneous and without any defect. This may be investigated by lightly tapping the rubber lining with an appropriate wooden hammer. At areas where the adhesion is broken, a hollow sound will occur.

H.5.1.3 Thickness

The thickness of the rubber lining applied on carbon steel substrates shall be determined and shall conform to the thickness as mentioned on the requisition form with a minimum of 90% of that thickness. A minimum of three measurements per square metre shall be made.

H.5.1.4 Hardness

The hardness shall conform to the value specified on the requisition within a tolerance of plus/minus 5°. A minimum of three readings per square metre shall be taken.

(to be continued)

APPENDIX H (continued)

H.5.1.5 Continuity of the lining

The continuity of the lining shall be checked according to (H.4.3.3); however, using a reduced voltage determined by the following formula:

4 (1 + thickness in mm) kV.

H.5.1.6 Hydraulic testing

If applicable, equipment and piping shall be tested hydraulically at a pressure equal to the test pressure mentioned in the appropriate design code, and at the maximum allowable service temperature for the particular lining. These conditions shall be maintained for a period of 1 hour. At the end of the test, the lining shall be visually inspected. Blisters, cracks or other surface irregularities are not permitted. Thereafter the lining shall pass the high-voltage spark test.

H.5.1.7 Vacuum testing

If applicable, the equipment and piping shall be tested at a vacuum of 130 mbar absolute at ambient temperature for a period of 1 hour. After this test no visible defects shall be permitted in the lining.

H.5.1.8 Flange alignment

The flatness of the lining applied on the gasket contact surfaces shall be determined with a stretcher and shall be within a tolerance of plus/minus 0.3 mm.

H.5.2 Certification

The manufacturer shall keep complete qualitycontrol and test reports. He shall submit a certified record of inspection and testing, together with a statement of compliance with these requirements. These shall include the certificates of the steel parts.

H.6 TRANSPORT AND STORAGE

Lined piping shall be packed in a manner which will ensure that no damage to the lining, including its edges, can occur. Rubber-lined equipment and piping shall not be transported or assembled if ambient temperature is below, or is likely to drop below, 0.°C. The objects shall be handled with care: hoisting shall be carried out using non-metallic slings. In particular branches, openings and flange facings are vulnerable and shall be protected adequately, e.g. by wood.

All rubber-lined items shall be clearly and permanently marked on the outside "RUBBER-LINED, HANDLE WITH CARE".

Rubber-lined equipment and piping shall be stored indoors or under cover. Allowance shall be made for free air circulation. Soft supporting material shall be used, e.g. wood or rubber. The objects shall not be exposed to direct heat or UV radiation. If this cannot be avoided owing to prevailing conditions, the items shall be kept filled with water until taken into use. Freezing of this water shall be prevented.

(to be continued)

APPENDIX H (continued)

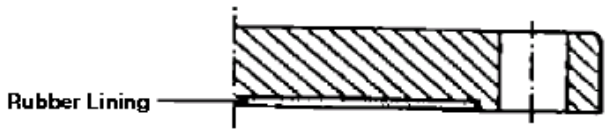

BLIND FLANGE - SPECIAL FACING

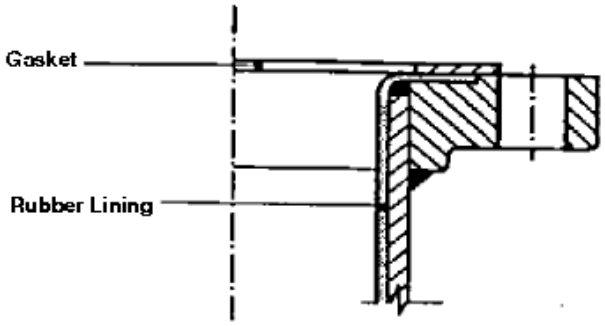

SLIP ON FLANGE - SPECIAL FACING

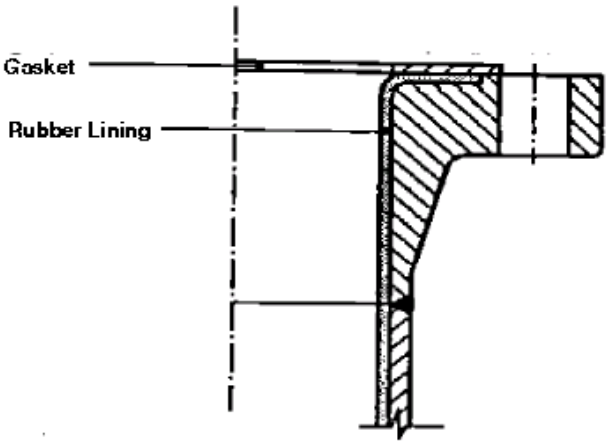

WELDING NECK FLANGE - SPECIAL FACING

FLANGED CONNECTIONS FOR HARD RUBBER-LINNED PIPING

DRAWING No. H-1

(to be continued)

APPENDIX H (continued)

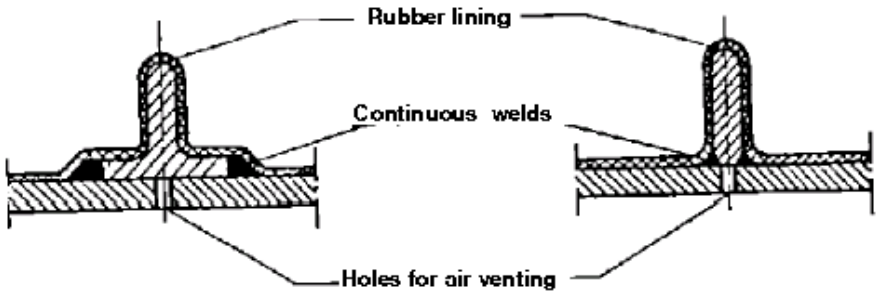

NOTE: Air vent holes to be drilled at regular distances. Diameter of holes depends on dimensions of vessel. but is generaly 5 mm.

WELDING DETAILS

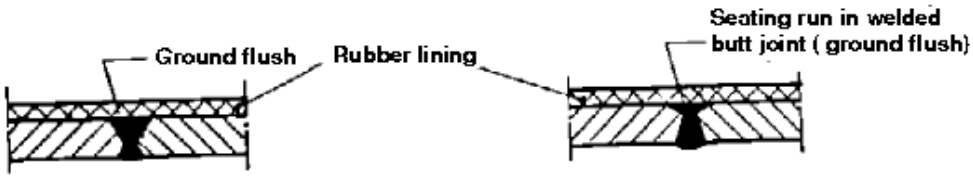

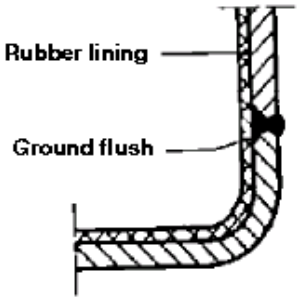

AIR VENT HOLES AND WELDING DETAILS

DRAWING No. H-2

(to be continued)

APPENDIX H (continued)

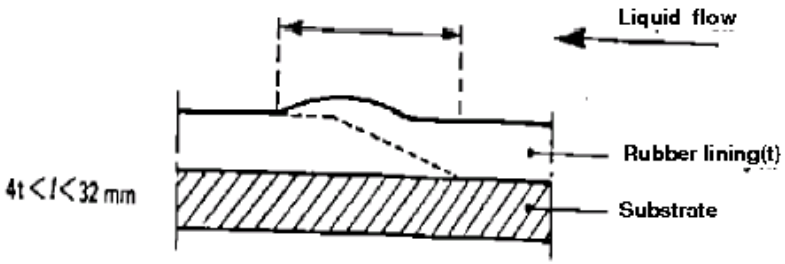

Fig . 1
OVERLAP BEVEL JOINT
(1 layer)

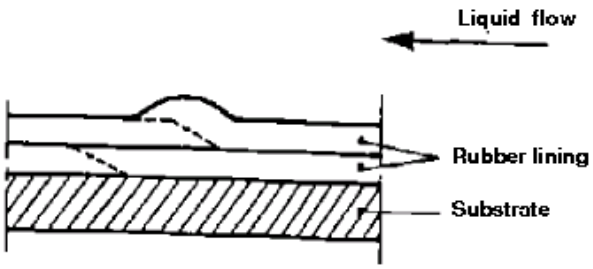

Fig .2
OVERLAP BEVEL JOINT
(2 layers)

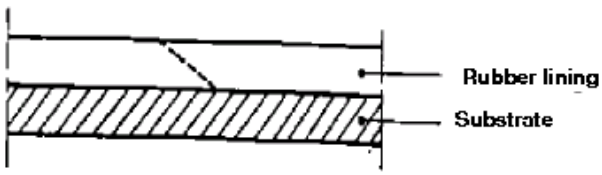

Fig . 3

JOINTS IN RUBBER LINING

DRAWING No. H-3

(to be continued)

APPENDIX H (continued)

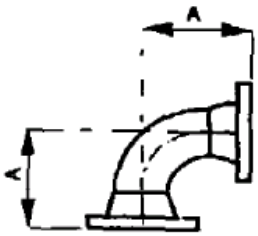

90 DEG. ELBOW

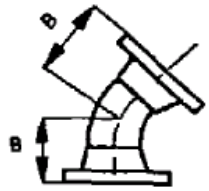

45 DEG. ELBOW

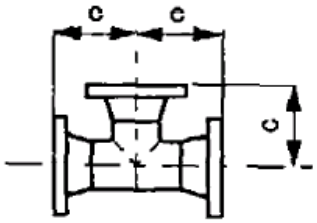

TEE STRAIGHT SIZE

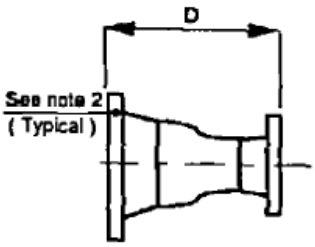

REDUCER

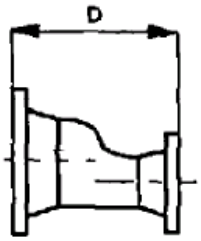

ECCENTRIC REDUCER

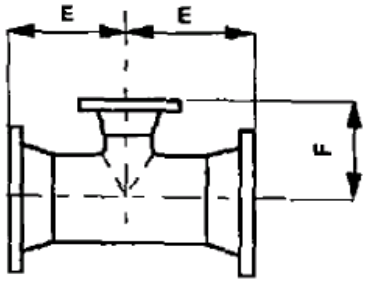

TEE REDUCING SIZE

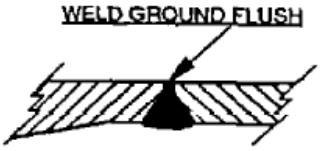

TYPICAL WELD DETAIL

NOM SIZE (DN)	A 1) mm	B 1) mm	C 1) mm
25	93	77	93
40	118	90	118
50	139	99	127
80	183	120	155
100	227	139	180
150	317	183	231
200	406	228	279
250	482	260	317
300	570	303	367

NOMINAL SIZE (DN)	D 1) mm	E 1) mm	F 1) mm
40 x 25	180	118	112
50 x 25	194	127	106
50 x 40	200	127	121
80 x 40	219	155	134
80 x 50	221	155	139
100 x 40	238	180	147
100 x 50	240	180	151
100 x 80	246	180	167
150 x 80	297	231	193
150 x 100	303	231	205
200 x 100	328	279	231
200 x 150	341	279	256
250 x 100	354	317	259
250 x 150	367	317	282
250 x 200	380	317	304
300 x 150	404	367	307
300 x 200	417	367	330
300 x 250	417	367	342

Notes:

1) Tolerance(mm) : + 4.0 / − 4.0

2) Flange , welding neck : Flat face with recess see Drawing No. H-6

3) Flange & fitting mat . : In accordance with Piping Class 1804.

OVERALL DIMENSIONS OF FLANGED FITTINGS

FOR RUBBER LINING

DRAWING No. H-4

(to be continued)

APPENDIX H (continued)

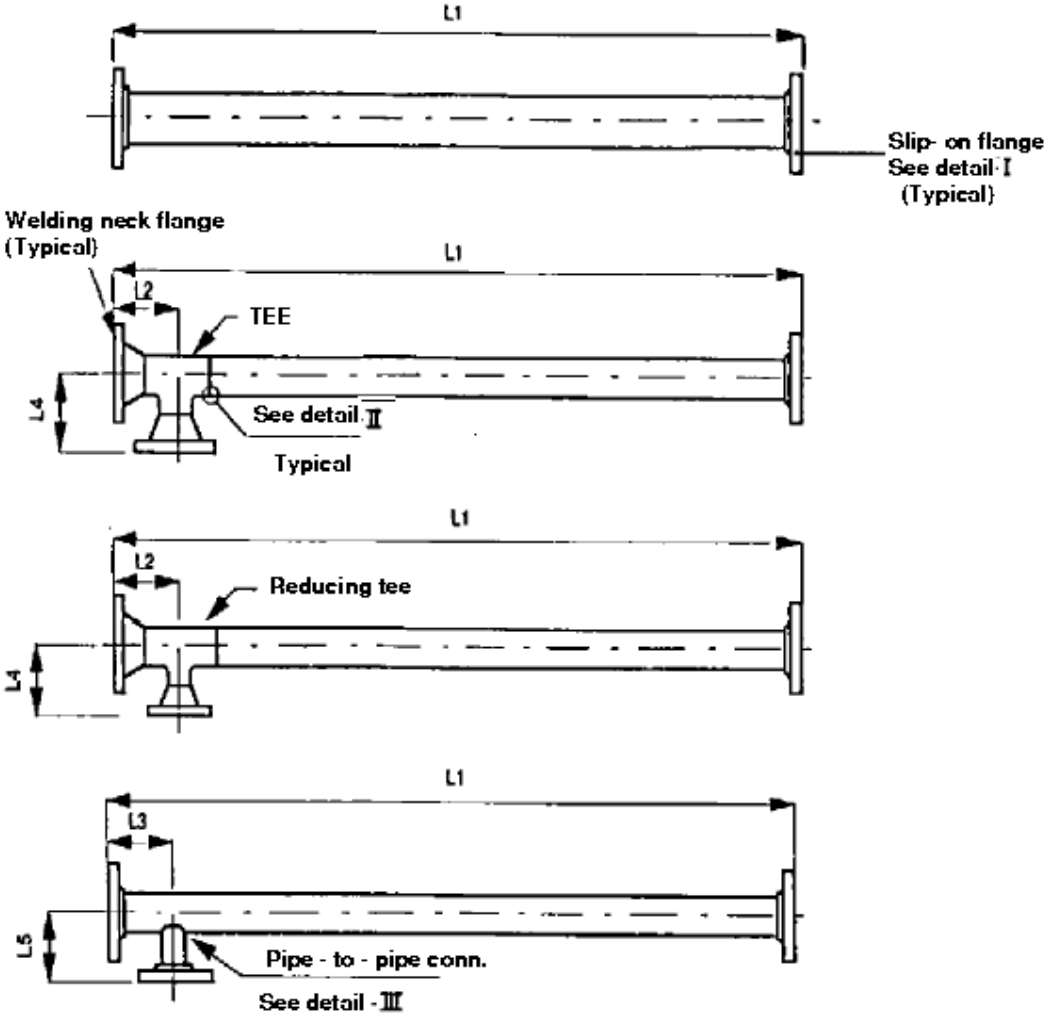

Run pipe Nom. size (DN)	1), 2) L1 - mm	2) L2 - mm	2) L3 - mm	Outlet - Tee Nominal Size (DN) 25	40	50	80	100	150	200	250	300	Outlet - pipe to pipe connection Nominal Size (DN) 25	40	50	80	100
				2) L4 – mm									2) L5 – mm				
25	1000	93	--	93	--	--	--	--	--	--	--	--	--	--	--	--	--
40	3000	118	--	112	118	--	--	--	--	--	--	--	--	--	--	--	--
50	4000	127	--	106	121	127	--	--	--	--	--	--	--	--	--	--	--
80	5000	155	120	--	134	139	155	--	--	--	--	--	150	--	--	--	--
100	6000	180	120	--	147	151	167	180	--	--	--	--	165	--	--	--	--
150	6000	231	140	--	--	--	193	205	231	--	--	--	200	200	200	--	--
200	6000	279	150	--	--	--	--	231	256	279	--	--	225	225	225	225	--
250	6000	317	150	--	--	--	--	259	282	304	317	--	250	250	250	250	--
300	6000	367	175	--	--	--	--	--	307	330	342	367	275	275	275	275	275

OVERALL DIMENSIONS OF FLANGED PIPING
FOR RUBBER LINING
DRAWING No. H-5 (Page 1)

(to be continued)

APPENDIX H (continued)

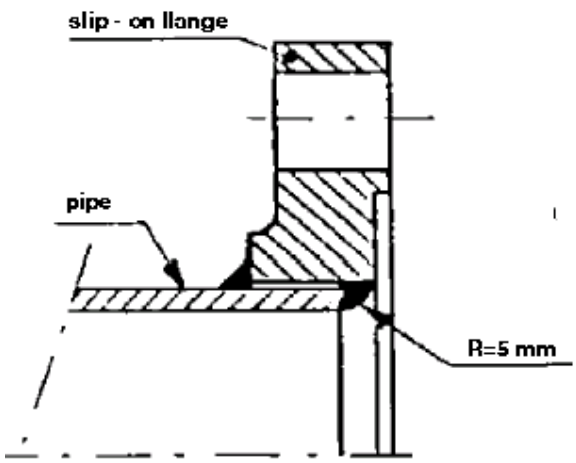

DETAIL - I

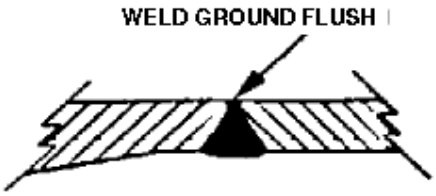

DETAIL - II

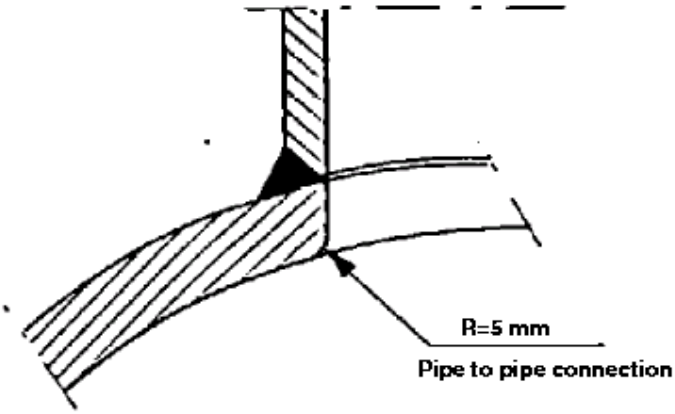

DETAIL - III

Notes:

1) Length	**:**	**Based on max. allowable length for ruber-lined pipe.**
2) Tolerace (mm)	**:**	**+ 4.0**
		- 4.0
3) Flanges	**:**	**Flat face with recess see Drawing No. H-6.**
4) Material	**:**	**In accordance with piping class 1804.**

OVERALL DIMENSIONS OF FLANGED PIPING
FOR RUBBER LINING
DRAWING No. H-5 (Page 2)

(to be continued)

APPENDIX H (continued)

MODIFIED FLANGES FOR

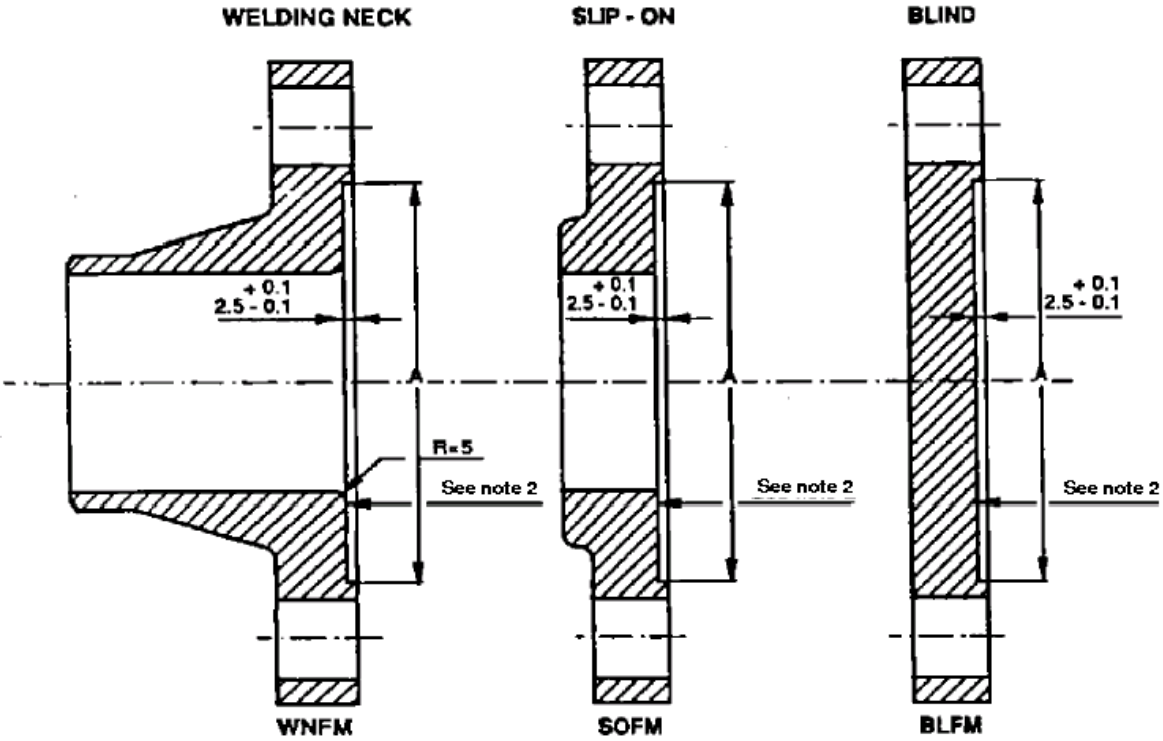

NOM. SIZE (DN)	A 1) mm
25	58
40	78
50	98
80	132
100	166
150	218
200	274
250	330
300	396

NOTES :

1) Tolerance (mm) : $^{+0.5}_{-0.5}$

2) facing finish : Ra 3.2 micrometer max . as per ANSI / ASME B 46.1

3) dimensions : Millimeters

FLANGES, FLAT FACE WITH RECESS
FOR RUBBER-LINED PIPING SYSTEM
DRAWING No. H-6

(to be continued)

APPENDIX H (continued)

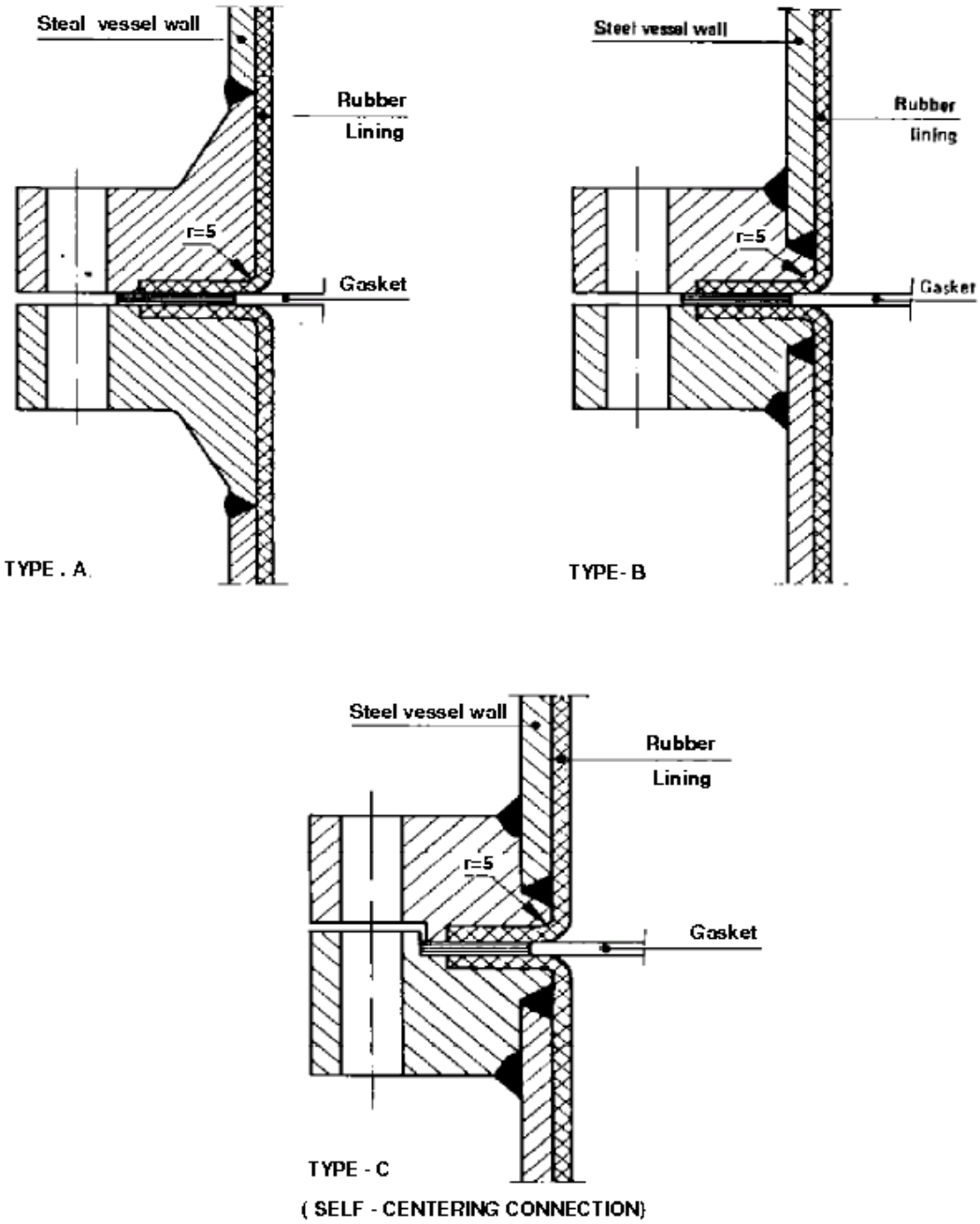

TYPICAL DETAILS OF

RUBBER LINED FLANGES

DRAWING No. H-7

APPENDIX I
GENERAL REQUIREMENTS FOR CEMENT LINING OF NEW PIPELINES

I.1 SCOPE

This technical specification gives the minimum requirements for the design, application, inspection, installation and testing of pipes from nominal size DN 100 (4 inch) up to and including nominal size DN 900 (36 inch) to be lined with cement mortar in the shop and the jointing of these lined pipes in situ, including the hand-applied lining of the field butt-joints.

The in situ lining of piping systems, other than the above mentioned joints, is outside the scope of this specification.

Internal cement lining of pipelines is usually required for carbon steel cooling water or fire-fighting water piping systems containing/carrying sea-water or brackisch water at ambient temperatures to prevent internal corrosion. These systems can be installed above ground as well as underground. If an above ground lined piping system is drained for a longer period, special precautions are required to prevent cracking of the lining due to extreme high or low temperatures, and temperature or humidity variations. The special precautions to be taken are outside the scope of this specification.

I.2 CONTRACT STRATEGY

I.2.1 Contractor Involvement

The contractor shall prepare for the manufacturer a detailed specification. In addition detailed Drawings shall be prepared if the details are not covered by the Drawings. Forementioned documents shall be approved by the Principal.

I.2.2 Selection of Cement Lining Contractor

The manufacture selected shall be able to design and install complete systems, including the procurement of all required piping materials together with technical services related to the products. In addition the manufacturer shall be responsible for the proper application of the cement lining to the field-joints. The manufacturer shall have provided systems to at least one Group Operating Company or prequalification tests shall be performed in accordance with section I.8. In both cases the final selection is subject to the Principals approval.

Damage to the lining may occur during the application of the shop painting, handling, transport and storage of the pipes. Therefore the manufacturer of the cement lining should also apply the shop-painting and/or wrapping to the outside of the pipe.

I.3 DESIGN OF CEMENT LINED PIPING SYSTEMS

I.3.1 General

Pressure design of pipes and fittings shall be in accordance with ASME/ANSI B31.3.

I.3.2 Service Condition

In general the fluid to be conveyed through cement lined pipes is sea-water or brackish water at ambient temperatures. However, the contractor shall obtain from the Principal a chemical analysis of the fluid to be conveyed.

(to be continued)

APPENDIX I (continued)

The temperature of the fluid to be transported shall not exceed 45°C.
The composition of the lining shall be determined taking into account the nature, operating temperature and velocity of the fluid to be handled. The composition of the lining shall be agreed with the Principal.
The lining applied shall have a design life of minimum 25 years.

I.3.3 Sizing Criteria

The diameter of the cement lined piping systems shall be sized so that the maximum water-velocity inside the lined piping shall not exceed 3 meters per second.
The minimum outside diameter for piping and fittings to be cement lined is DN 100 (4 inch). The maximum diameter shall be DN 900 (36 inch). The straight length of the pipes shall be between 6 and 13 meters.
Where carrying capacity is of importance, calculations shall be made to determine the maximum friction and loss of waterhead.
Unless an increased thickness has been specified, the recommended lining thickness after curing, shall be as follows:

Nominal pipe size, Inches	Minimum lining thickness, mm	Tolerance in mm
4	5.0	+3
6	5.0	+3
8	6.0	+3
10	6.0	+3
12	8.0	+3
14	8.0	+3
16 up to 36	10.0	+3

I.3.4 Limitations on Pipe

I.3.4.1 Wall thickness

The wall thickness of pipe (schedule No.) shall be as per piping class No. AZ03 of IPS-E-PI-221/2.

I.3.4.2 Tolerances

Tolerances on dimensions of pipe ends shall be in accordance with API 5L (including the ends of fabricated fittings).

I.3.5 Fittings, Flanges, Gaskets and Valves

I.3.5.1 Fittings

For the selection and overall dimensions of fabricated fittings see Drawings No. I-3 and I-4. For typical details of a set-on branch (for cement lined fittings) see Drawing No. I-7. For dimensions of sleeves see Drawing No. I-5. Factorymade butt welding fittings shall be in accordance with ASME/ANSI B16.9.
All sleeve-Joint connections of the piping shall be prefabricated prior to installing the lining. All pipes, T-pieces, and other fittings shall be prepared with bevelled ends. When sleeve couplings shall be applied, for piping with a diameter of DN 600 (24 inch) or less, the pipes shall be prepared with one end plain and the other end with a sleeve coupling, externally welded to the pipe. T-pieces, valves and other fittings shall be prepared with sleeve couplings welded to both ends. In this case one of the straight pipes connected to the forementioned shall be provided without sleeves.

(to be continued)

APPENDIX I (continued)

Joints for piping with diameters DN 650 (26 inch) up to and including DN 900 (36 inch) shall be butt-welded.

For shop-welding, welding procedures and welders shall be qualified in accordance with ASME Section IX. The procedures shall be submitted to the Principal for approval.

I.3.5.2 Flanges

All flanges shall be class 150, raised face, except those connected to flat face flanges of glass-fibre reinforced epoxy or equipment with cast iron flanges etc. In these cases a suitable matching flange should be used.

Slip-on flanges should be installed in pipe sizes from DN 100 through DN 600. For pipe sizes DN 650 and larger welding neck flanges shall be used. Flanges from DN 100 through DN 600 shall be in accordance with ASME/ANSI B16.5 and flanges from DN 650 and larger shall be in accordance with MSS SP-44.

Flange facing shall be smooth finish between Ra 3.2 and 6.3 micrometers.

For flanged ends (slip-on) for cement-lined pipe and fittings see Drawing No. I-6.

For shop-welding, refer I.3.5.1.

I.3.5.3 Gaskets

For design pressures up to and including 10 bar ga the gaskets shall be 3 mm thick, reinforced chloroprene rubber with a Shore A hardness of 70.

For design pressures above 10 bar ga, CAF gaskets 3 mm thick shall be used.

The inside diameter of the gasket shall be equal to the inside diameter of the cement lining.

Note that on some pipe-to-pipe valve (e.g. butterfly) connections the cement lining I.D. is tapered to equal the pipe I.D. at the gasket position to prevent possible inferference of the valve disc with the cement lining (see Drawing No. I-2).

I.3.5.4 Valves

The valves shall be as per piping class No. AZ03 of IPS-E-PI-221/2.

I.3.6 Selection of Materials

I.3.6.1 Pipes

Seamless	: DN 100 through DN 400-API 5L GR.B - [1) 2) 3) 4)]
Welded	: DN 450 through DN 900-API 5L GR.B - [1) 2) 4) 5)]
	(Submerged-arc weld)

Notes:

1) Carbon content 0.23% max.

2) Rimming steel not permissible

3) Non-expanded pipe

4) Jointers not acceptable

5) Cold expansion is acceptable up to a maximum of 1.70%

(to be continued)

APPENDIX I (continued)

I.3.6.2 Fittings

Fittings: ASTM A234-WPB shall have the following restriction: Carbon content of 0.23% max. and the Manganese content may be increased to 1.3% max.

Base material:

DN 100 through DN 400: seamless pipe - ASTM A106 GR. B

DN 450 through DN 900: plate - ASTM A515 GR. 65 (or seamless pipe)

I.3.6.3 Flanges

Flanges:
- ASTM A105 with the following requirements:
- Normalized
- Marking to A105-S9
- Carbon content 0.25% max.
- Manganese content may be increased to 1.20% max.

I.3.7 Compatibility of Materials

The possibility of galvanic corrosion shall be taken into account when different metals are coupled together. The coupling shall be broken by flange insulation made from non-conducting material.

I.4 APPLICATION OF CEMENT LINING

I.4.1 Surface Preparation

The inside of the pipe shall be cleaned of all grease, mill scale, loose rust or other foreign materials, by blast cleaning to Sa2 in accordance with ISO 8501-1 or by power tool cleaning to St3.

I.4.2 Composition of the Cement Mortar

I.4.2.1 Sand

Sand shall be natural sand, manufactured sand or a combination thereof and shall conform to ASTM C-33 or BS 882/1201 within the following limits:

SIEVE	PERCENT PASSING
No. 8 (2.36 mm)	100
No. 16 (1.18 mm)	50 - 95
No. 30 (0.6 mm)	25 - 65
No. 50 (0.3 mm)	10 - 35
No. 100 (0.15 mm)	2 – 15

(to be continued)

APPENDIX I (continued)

Deleterious substances shall not exceed the following limits:

SUBSTANCES	% BY MASS	STANDARD
Clay lumps and friable particles	3.0	ASTM C 142
Material finer than No. 200 sieve	5.0	ASTM C 117
No. 1 and No. 2 combined	6.0	
Acid soluble chloride (CI)	0.06	Analytic
Acid soluble sulphate (SO_3)	0.4	Analytic
Magnesium sulphate soundness	15	ASTM C 88

The maximum size of sand-grain shall not exceed one third of the thickness of the lining.

The fineness modulus of the sand shall be not less than 2.3 or more than 3.1.

The sieve analysis shall be performed in accordance with ASTM C-136.

I.4.2.2 Cement

For general application, the cement shall be Ordinary Portland Cement in accordance with BS 12 or ASTM C 150 or equivalent.

When high sulphate resistance is required, Portland Cement type V in accordance with ASTM C 150 or Sulphate Resisting Portland Cement in accordance BS 4027 with a maximum tricalcium-aluminate content of 3% shall be used.

When moderate sulphate resistance or moderate heat of hydration is required, other types of cement can be used e.g.

Portland Cement type II in accordance with ASTM C 150 or tricalcium-aluminate-free Portland Cement.

Fly-ash and raw or calcined natural pozzolan according to ASTM C 618 can be used as a mineral admixture in Portland Cement.

Blast furnace slag shall conform to the applicable parts of ASTM C 595.

The type of cement including all admixtures or chemical additives shall be approved by the Principal.

The source of cement shall not be changed without prior written approval of the Principal. If bagged cement is used, all bags shall be marked with the name of the manufacturer, type of cement and volume. Similar information shall be provided on the bills of lading accompanying each shipment of bulk cement.

A manufacturer's test certificate, showing results of the laboratory chemical tests and physical tests, shall be submitted by the supplier to the Principal not later than the day of delivery of the cement.

I.4.2.3 Water

Water shall be potable and not contain chlorides (CI) in excess of 500 mg/kg nor sulphates (SO_3) in excess of 500 mg/kg.

The water shall not contain dissolved solids in excess of 2000 mg/kg or sugars, phosphates and harmful impurities (e.g. oil).

The pH of the water shall be between 5.0-8.0.

Testing shall be carried out in accordance with BS 2690 and BS 3148 or equivalent.

(to be continued)

APPENDIX I (continued)

I.4.2.4 Cement mortar mix

Unless otherwise agreed the cement/sand ratio and the water/cement ratio shall be as follows:

- The cement/sand ratio shall be one part by weight of cement and one and a half part by weight of dry sand (1:1.5) for linings not exceeding 6 mm.
- For linings with a thickness > 6 mm, the cement/sand ratio shall be 1:1 (parts by weight).
- The water/cement ratio shall be between 0.3 and 0.4.

I.4.3 Installation of Shop Cement Lining

I.4.3.1 General

Straight sections of pipes, diameters from DN 100 (4 inch) up to and including DN 900 (36 inch), length 6 to 13 meters, shall be lined with the spinning method. The interior surface shall be smooth, straight and true and the sand/cement particles shall be equally distributed throughout the lining thickness, after completion of the lining process.

I.4.3.2 Spinning method

The lining shall be applied by a spinning machine specifically designed and built for the purpose of applying cement mortar linings to the interior of steel pipe by means of centrifugal forces and rotation of the pipe. To prevent distortion or vibration during spinning, each section of pipe shall if required, be braced with external or internal supports. The entire quantity of mortar required for the lining of one section of pipe shall be placed without interruption. The pipe shall be rotated slowly until the mortar has been equally distributed along the inside periphery of the pipe.

Thereafter the rotation speed shall be increased to produce a dense lining with a smooth surface and a minimum of shrinkage. Provisions shall be made for removal of surplus of water.

I.4.3.3 Bends and fittings

Bends and fittings which cannot be machine lined in accordance with (I.4.3.2) may receive a hand-applied mortar lining. Hand-applied mortar shall have a uniform surface. Cement mortar for hand work shall be of the same consistency and material as the mortar for machine method. Surfaces to be lined shall be cleaned in accordance with (I.4.1) and damped with water immediately prior to placing the hand-applied mortar. Steel finishing trowels shall be used for the hand application of cement mortar.

I.4.4 Curing

I.4.4.1 General

After application of the lining, the pipe and/or fittings shall be sealed with plastic caps and left to cure in situ, or they may be transferred carefully to a curing yard.

The curing area shall be sheltered, so that lined pipes and fittings are protected from harmful climatic conditions (e.g. exposure to direct sun, frost, etc.). Within 24 hours after application of the cement lining the bores shall be inspected and water added to aid curing if required. After the inspection, the ends of the pipes and fittings shall be re-capped with the plastic caps. These covers shall not be removed within 14 days after cement lining in order to protect the lining form drying out.

(to be continued)

APPENDIX I (continued)

Pipes or fittings shall not be removed from the curing yard until the curing procedure is completed and the mortar has reached its specified strength.

Water to be used for curing shall be in accordance with (I.4.2.3).

I.4.4.2 Normal curing

The lining shall be protected form drying out as specified above for the whole period of the hardening process of the mortar in order to minimize shrinkage cracks. The minimum period of hardening shall be 28 days.

I.4.4.3 Water curing

The lining shall be kept totally submerged for the total period of the hardening process of the mortar in order to minimize shrinkage cracks. The minimum period of hardening shall be 4 days.

I.4.4.4 Steam curing

Steam curing shall only be applied if required and approved by the Principal. Recording thermometers shall be installed.

I.4.4.5 Membrane curing

Membrane curing by application of any moisture-retaining liquid is not permitted.

I.4.5 Lining Repair

Dummy, spalled and excessively cracked areas, etc. in fully accessible pipes shall be removed and repaired by hand to the required thickness of the lining.

Cracks with a width less than 0.8 mm can be left, providing they will not impair the stability of the lining, as the selfhealing effect will set them tight as soon as the pipes are in operation. Cracks with a width greater than 0.8 mm can be washed in by means of soft brush with a liquid sand/cement mixture consisting of one part cement and one part fine sand (0.1 mm). The mixture should be liquid similar to heavy paint.

Larger local damages, other than cracks, shall be repaired by removing all loose particles, old mortar, grease and dirt by brushing with a stiff/wire brush. All traces of oil and grease shall be removed with a suitable de-greasing agent. The sides of the existing cement lining shall be primed with a multi-purpose adhesive, based on synthetic resin.

The damaged area shall be filled with a ready mixed mortar. The repaired lining shall be finished by means of a trowel or a spatula and brushed flush with the original cement, it shall be kept moist for at least three days. Minor damage can be repaired by means of a multi-purpose adhesive.

I.5 COATING OF CEMENT-LINED PIPES

The faces of all flanges to be used in cement lined piping systems shall be coated with Shell Ensis Fluid SDC, after which they shall be provided with protective covers.

The shop-painting of the outside surface of the pipe, shall be carried out after installing and curing of the cement lining, while the wrapping of the outside surface of the pipe (if required) shall be done before the installation and curing of the lining.

(to be continued)

APPENDIX I (continued)

I.6 HANDLING OF CEMENT-LINED PIPE

Lined pipes and fittings shall be handled carefully to avoid internal damage to the cement lining.

The end caps shall be kept in place during transport and storage in order to prevent dust, dirt, foreign matter etc. entering the pipe.

For loading and unloading of very heavy pipes, it is recommended to use slings with cushion pads or a suitable forkarrangement placed at the centre of the joints. Hooks or other devices which insert into the ends of the pipe shall not be used. A flat-bed trailer provides the best support for the lined pipes during transport. During loading or unloading lined pipes shall not be dropped onto or off the transporting vehicle.

To prevent bending of the pipes which can cause damage to the lining, supports shall be used during storage and shipping.

The distance between the supports shall not exceed 3 m.

Pipes shall be stored in supported tiers. The height of the tiers depends on the diameter of the pipes and shall not be more than 10 pipes for diameters < DN 150 (6 inch), 6 pipes for diameters between DN 200 to DN 400 (8 inch to 16 inch), 4 pipes for diameters between DN 500 to DN 900 (20 inch to 36 inch).

I.7 FIELD-JOINTING

I.7.1 General

The pipes and fittings shall be assembled in situ by means of field welds or flanged connections. The field welds shall be butt-joints for pipe diameters of 26 inch and above and sleeve-joints for diameters below 26 inch. However, buttjoints shall be internally lined in situ.

The Contractor and Principal shall agree upon the type of multi-purpose adhesive and the ready mixed mortar to be used for the assembling of the pipes.

Alternative methods for field jointing of cement lined pipes and fittings (for instance with impregnated gaskets etc.) are subject to approval of the Principal.

I.7.2 Butt-Jointing

The bevelled ends of the cement lined pipes shall be thoroughly cleaned, see (I.4.1), and all loose particles of the cement lining shall be removed over 20 mm at both ends of the pipe, i.e. 20 mm at either side of the joint, see also Fig. 4 of Drawing No. I-1. After the welding (see section I.7.5) has been completed, a hand-applied mortar shall be used to finish the cement lining at the inside surface of the steel pipe at the location of field weld, see Fig. 5 of Drawing No. I-1.

Unless another method has been agreed upon, the sides of the existing cement lining shall be sealed with a priming coat consisting of one part of a multi-purpose adhesive, based on synthetic resin (e.g. Conline "CEBOND", X-PANDO COMPOUND No. 2, SINMAST 121 or approved, equivalent bonding agent) and one part of potable water. After this priming coat has become tacky (20-30 minutes), the ready mixed mortar shall be applied.

The application of the adhesive and ready mixed mortar shall be in accordance with manufacturer's specifications. The hand applied mortar shall be finished by means of a trowel or spatula and shall be brushed flush after which a curing compound shall be applied. Pressure testing of a pipe section with site applied cement lining shall be delayed until 28 days after application or until such time that the minimum compression strength has been reached (this will require an earlier compressive strength test in addition to the 28 day test, I.9.1.6).

(to be continued)

APPENDIX I (continued)

I.7.3 Sleeve-Jointing

The free access-length of the female part shall be determined prior to the jointing and shall be marked on the male part over the full circumference, see Fig. 2A and 2B of Drawing No. I-1. The cut-end of the pipe inside the sleeve coupling shall be thoroughly cleaned, dry and free of dust and shall be provided with a concrete glue. This type of glue shall be based on a two component solvent free epoxy-resin (e.g. "SINMAST UW" or approved equivalent) suitable for application on moist mortar surfaces. Before installation of the male pipe end part, the concrete glue shall be tapered with a minimum thickness at the cement lining edge of 3 mm and with an angle of 75°, see also Fig. 2 of Drawing No. I-1.

Immediately after the application of the concrete glue, the male part shall be carefully pulled into the female part, without distorting the alignment (i.e. center-line) of the pipe and shall be tack-welded in accordance with section (I.7.5).

I.7.4 Cutting to Size in Situ

When cutting in situ is unavoidable, this shall be carried out at the required position by means of cutting-disk of 3 mm.

Flame cutting is not allowed. The end of the steel pipe shall be cut perpendicular to the pipe and bevelled (if required) depending on the type of the field-joint. For a sleeve-joint, the cut pipe end shall be used as the female part. For a buttweld joint the cement lining shall be cut over a length of at least 20 m/m at the end of the pipe. In both cases the cement lining shall be cut perpendicular to the pipe. Typical details of the pipe ends are shown on Drawing No. I-1.

I.7.5 Field Welding

The pipes shall be tack-welded in three equidistant positions.

The pipe shall be joined by the shielded metal arc welding process. The arc shall not come in direct contact with the cement lining or seal material.

Starts and stops shall be staggered so as not to start or stop more than once in the same place. Welding slag shall be cleaned from all weld passed.

Welding procedures and welders shall be qualified in accordance with ASME Section IX, the procedures shall be submitted to the Principal for approval.

Welding materials used shall be in accordance with the current list of approved welding consumables published by Lloyds Register of Shipping, Controlas or other internationally acknowledged bodies.

I.8 QUALITY CONTROL

I.8.1 General

Before the start of the actual cement lining production the manufacturer shall make arrangements to execute line-up tests in order to demonstrate the suitability of the equipment for an uninterrupted production process. All required materials shall be supplied by the manufacturer. The testing shall reflect the actual application conditions.

The entire process of applying cement mortar lining, at the manufacturer’s works and at the construction site, shall be subject to continuous inspection by a QC inspector appointed by the contractor, but such inspections shall not relieve the manufacturer of his responsibility to furnish material and perform the work in accordance with this specification.

(to be continued)

APPENDIX I (continued)

I.8.2 Procedure Qualification Test

Prior to the installation of the shop cement lining, or in case of any variation in the process or composition of the mortar or change in any components the manufacturer shall perform procedure tests to demonstrate that he is able to produce a lining system in accordance with the design requirements. The constituents, mortar and finished pipe shall be tested, the samples shall be taken from one of the first finished test pipes or fittings, and testing shall be carried out as indicated below:

Individual constituents of the mix

- cement/admixture
- sand
- water

Cement mortar test specimen

- density
- compressive strength
- flexural tensile strength
- water absorbtion

Finished product

- visual inspection

The acceptance criteria for the tests shall be in accordance with section (I.9). Successful tests qualifies the procedure for the installation of the actual lining.

A record shall be made of the complete test procedure, including:

- details of test piece,
- batch identification of cement mortar.
- test data and results.
- acceptance by principal's inspector.

I.8.3 Quality Control During Shop Application

During preparation of the cement mortar and subsequent application, a regular production sampling program shall be established and maintained.

A logbook shall be kept showing the portion of the completed lining which is represented by the sample and all information regarding the sample preparation and the operating parameters at the time of sample collection such as ambient temperatures, water content, cement/sand ratio, mixing times. Preparation of the samples shall be witnessed by the QC inspector.

Immediately after the final spin an inspection of the cement lining shall be carried out by looking through the pipe from each end, using a strong light. Defects in lining including but not restricted to sand pockets, voids, sags, oversanded areas, blisters, excessively cracked and dummy areas, and unsatisfactory thin spots shall be removed before the initial set of the mortar.

Defective areas encompassing the full diameter of the pipe shall be repaired by machine. Small defects in pipes > DN 600 (24 inch) shall be repaired by hand to the full required thickness of the cement lining. In pipes less than DN 600 (24 inch), defective lining shall be removed before the initial set of the mortar. Defective linings rejected after initial set shall be replaced or repaired by the most practical method to be determined by the manufacturer in accordance with a procedure approved by the Principal.

(to be continued)

APPENDIX I (continued)

Most cracking occurs when the lining is allowed to dry out during curing, transportation and storage. The inspector shall ensure that the lining is still moist after inspection and that air-tight end caps are placed and maintained on the pipe.

I.8.4 Quality Control During Field-Jointing

Before assembling the pipes and fittings shall be inspected for possible cracks and damage. If required any cracks and damage shall be repaired prior to the assembling of the piping system see (I.4.5).

The cement shall be the same as applied for the shop cement lining. Both sand and cement and quality shall meet the requirements as described in section (I.4.2.1) and (I.4.2.2).

The lengths of pipe shall be butted together and checked for alignment and good contact of the cement lining and pipe ends.

A ready mixed mortar shall be used for the butt-joints and to repair linings of butt-joints.

It is recommended to inspect the piping system 8 days after completion of the cement lining.

I.8.5 Production Tests

Production testing shall be performed during manufacturing of the pipe lining and tests and inspection shall be carried out in accordance with the table below. All test results shall be reported and submitted to the Principal.

Test or inspection	Frequency
cement/admixture	once per batch delivered
sand/additives	once per week
water/cement ratio	twice a day
mixing ratio/times	twice a day
density	twice a day
compressive strength	twice a day
flexural strength	twice a day
ambient temperature	once a day
visual inspection	continuously
lining thickness	20% of pipes and fittings
pipe and fitting ends	each pipe and fitting
surface condition	each pipe and fitting
lining structure	once per week

The acceptance criteria for the tests shall be in accordance with section (I.9).

I.9 TESTS AND INSPECTION CRITERIA

I.9.1 General

All bare pipes shall be inspected before cleaning and lining. The surface on which the cement lining is to be installed shall be free from all grease, mill scale, loose rust or other foreign materials prior to the installation of the cement lining.

Test samples of the cement lining mortar shall be prepared by the manufacturer. Each sample shall be clearly marked with the contractor's code numbers for that day/shift/crew and for sequence of production. The manufacturer shall be responsible for regular transport of samples to an independent qualified laboratory, subject to Principal's approval.

If samples or completed lining do not meet the specified criteria, the installed cement lining represented by the failing sample(s), shall be removed and replaced.

Completed lining not meeting the specified criteria under I.9.1.10 / I.9.1.11 / I.9.1.12 / I.9.1.13 shall be rejected.

(to be continued)

APPENDIX I (continued)

I.9.1.1 Sand

For test criteria refer (I.4.2.1) of this specification.

I.9.1.2 Cement

For test criteria refer (I.4.2.2) of this specification.

I.9.1.3 Water

For test criteria refer (I.4.2.3) of this specification.

I.9.1.4 Water/Cement ratio

The Water/Cement ratio determined in accordance with DIN 1048, "Drying to constant weight", shall be between 0.30 and 0.40.

I.9.1.5 Mixing ratio

The dry-mix of lining materials shall not contain less than 40% nor more than 50% of cement by weight.

I.9.1.6 Compressive strength

The compressive strength after a curing period of 28 days, tested in accordance with ASTM C 349, shall not be less than 55 N/mm^2.

I.9.1.7 Flexural strength

The flexural strength after a curing period of 28 days, tested in accordance with ASTM C 348, shall not be less than 6.5 N/mm^2.

I.9.1.8 Density

The density, measured in a saturated, surface dry condition, shall not be less than 2160 kg/m^3.

I.9.1.9 Water absorbtion

The water absorbtion of the sample, tested in accordance with ASTM C 642 shall not exceed 10%.

I.9.1.10 Lining thickness

The thickness of the lining shall be measured on the vertical and horizontal diameters of the cut faces at both pipe ends, that is at clock positions 3, 6, 9 and 12, by direct measurement or by means of suitable electric instrument e.g. a covermeter, calibrated before use. The values of lining thickness shall be given with an accuracy of 0.10 mm. For tolerances of lining thicknesses see (I.3.3) of this specification. **(to be continued)**

APPENDIX I (continued)

I.9.1.11 Pipe and fitting ends

Pipe and fitting ends of pipes and fittings with a diameter of 26 inch and above assembled in situ by means of field welding shall have the cement lining removed over a length of 20 mm at either side of the pipe.

The ends of the lined pipes are considered to be defective if the lining end is:

a) not located as specified,

b) not perpendicular to the longitudinal axis of the pipe,

c) not square,

d) chipped or cracked,

e) separated from the steel pipe surface,

f) not to the specified thickness.

In addition to the above the welding bevel shall be free of cement.

I.9.1.12 Surface condition

The surface condition of the finished cement lining shall be smooth and even, not be flattened at individual spots, not have loose sand, not have dummy, spalled or excessively cracked areas or show waves or grooves. Single waves or grooves are acceptable providing the minimum specified lining thickness is maintained. However, the maximum peak to trough height shall not exceed 1.0 mm. Aggregate grains may only protrude at the surface sporadically. Hairline cracks and sporadically occurring surface cracks up to 0.8 mm are allowed.

Voids, being a place in the pipe where the cement lining is not continuous, are not acceptable. Voids occur during the spinning process when the cement does not distribute evenly.

Sags, appearing as large smooth lumps in the lining at the top of the pipe, are not acceptable.

I.9.1.13 Lining structure

The polished section of a cement lined pipe sample shall not have visible pores and the individual grains of the sand shall be surrounded on all sides with the cementing agent.

I.10 FABRICATION REPORT

After finishing the work as defined in the purchase order, the contractor shall provide a fabrication report with the following contents:

- project references such as: location, project number, piping system
- bill of materials including lining
- reference drawings and specifications
- registration of date and time of application of all phases
- registration of the produced samples and tests results
- final inspection results
- welding procedures used

This report shall also include certificates for the following materials:

- piping, fittings, flanges, gaskets and valves,
- welding consumables,
- sand,

(to be continued)

APPENDIX I (continued)

Cement mill test certificates shall be provided for each shipment of:

- cement
- admixtures and additives,
- adhesives, concrete glue and ready-mixed mortar.

I.11 GUARANTEE

If an inspection by the Principal of the cement lining work within a period of five year after final completion and acceptance of the contract work gives evidence of defective materials or workmanship as defined in this specification, then the Principal may order such remedies as described in section (I.4.5) of this specification. The manufacturer shall perform the repairs at his own expence in a manner acceptable to the Principal.

(to be continued)

APPENDIX I (continued)

Fig .1

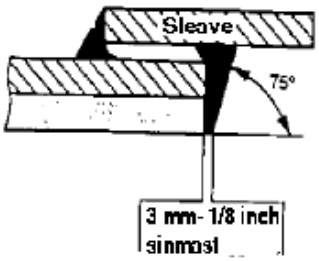

Fig .2

s r - sleeve recess

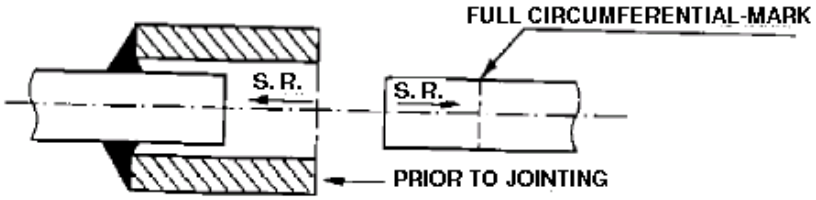

Fig . 2A Fig .2B

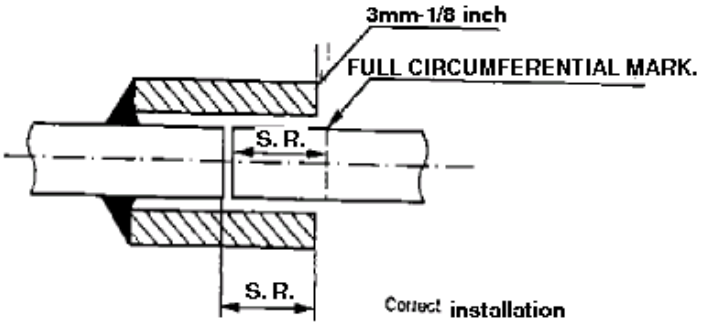

Fig . 2 C

PIPE JOINTING-SLEEVE JOINTS

DRAWING No. I-1

(PAGE 1)

(to be continued)

APPENDIX I (continued)

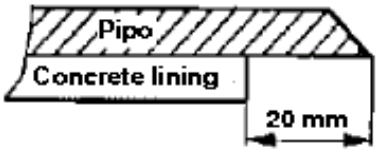

FIG . 4

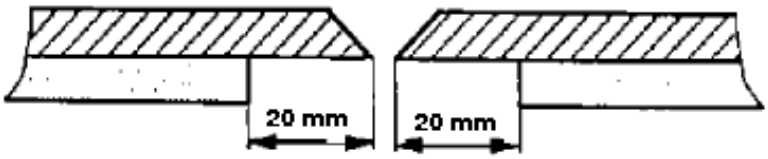

FIG . 4 A

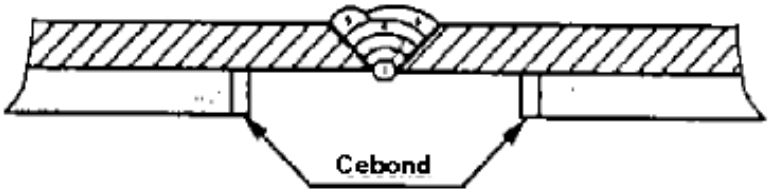

FIG .4B

FIG-5

PIPE JOINTING-BUTT JOINTS

DRAWING No. I-1

(PAGE 2)

(to be continued)

APPENDIX I (continued)

FIG 2 D

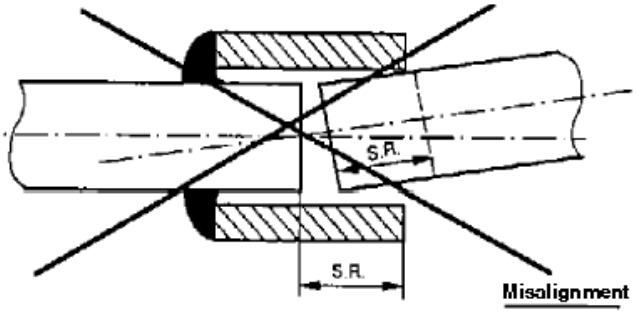

incorrect instalation.

FIG. 2E

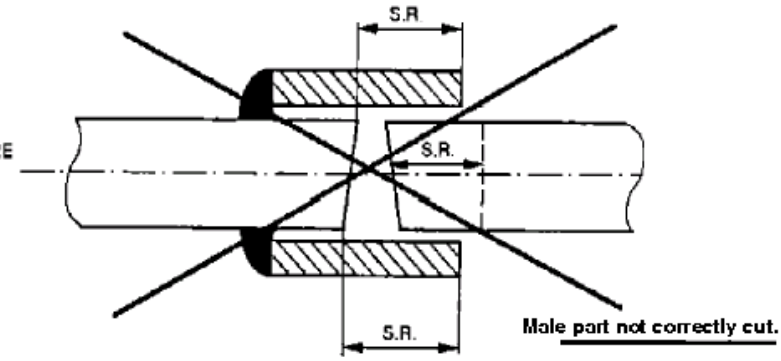

incorrect installation

Fig. 3

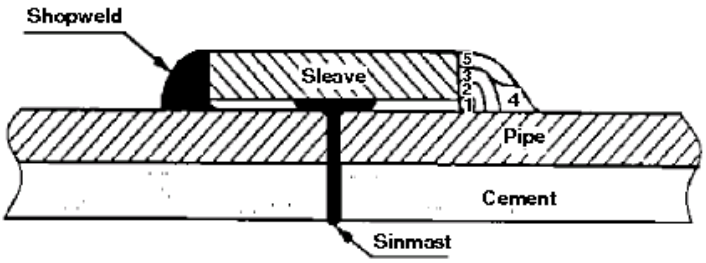

PIPE JOINTING-SLEEVE JOINTS

DRAWING No. I-1

(PAGE 3)

(to be continued)

APPENDIX I (continued)

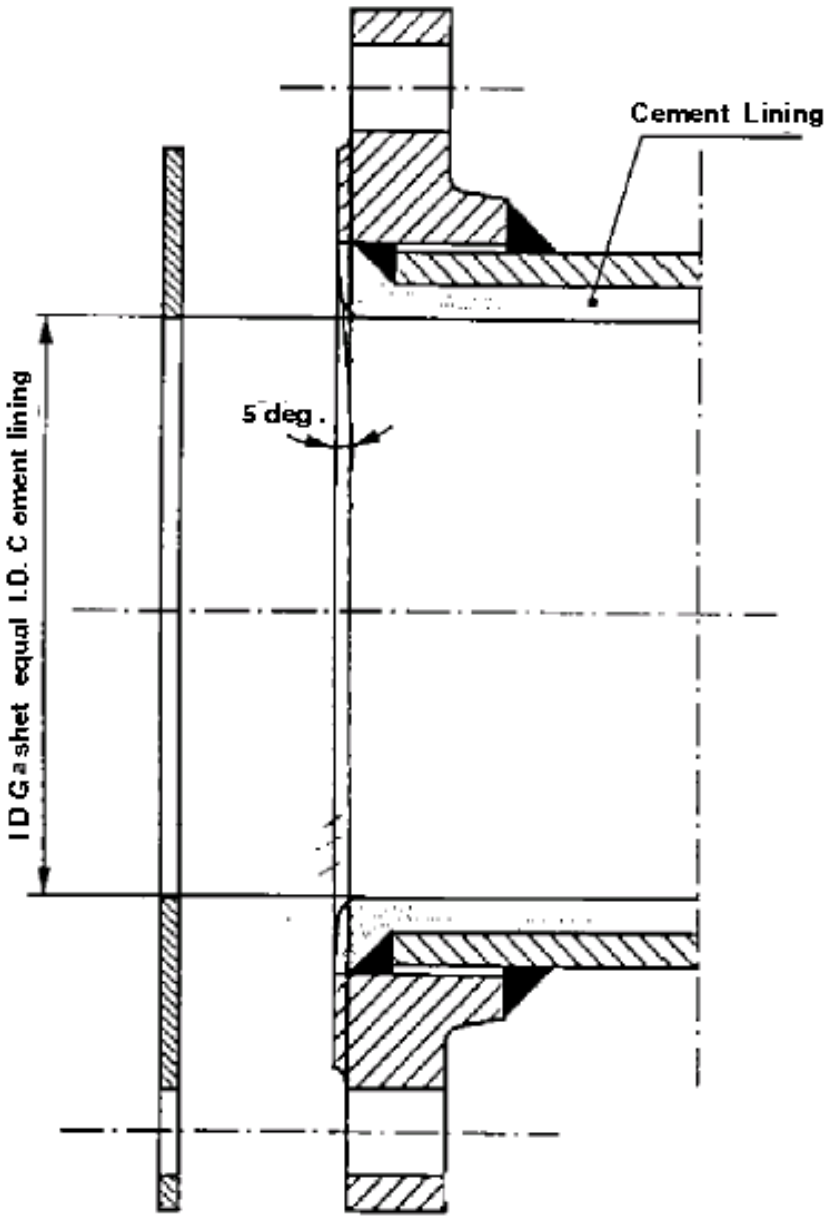

Flange is flat-face not raised-face
for gasket material see (I-3.5.3)

TYPICAL DETAILS OF FLANGED PIPE-TO-PIPE CONNECTION
DRAWING No. I-2
(PAGE 1)

(to be continued)

APPENDIX I (continued)

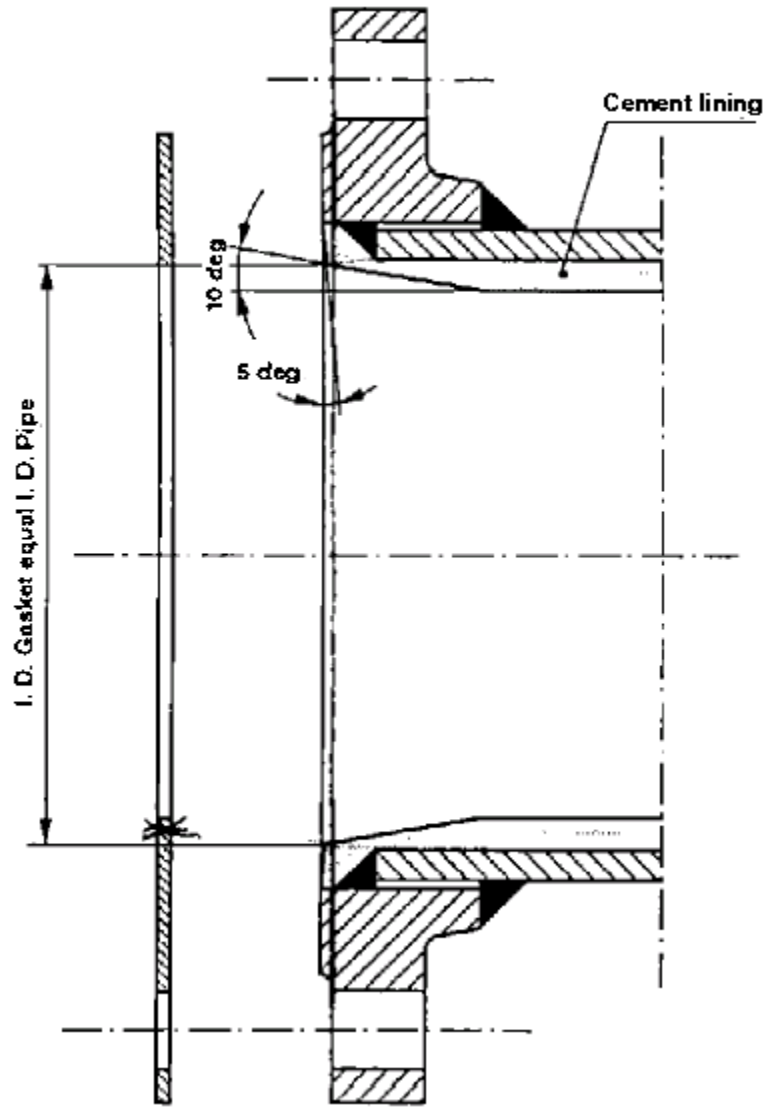

Flange should be flat-face not raised-face

for gasket material see (I-3.5.3)

TYPICAL DETAILS OF FLANGED PIPE-TO-PIPE CONNECTION

DRAWING No. I-2

(PAGE 2)

(to be continued)

APPENDIX I (continued)

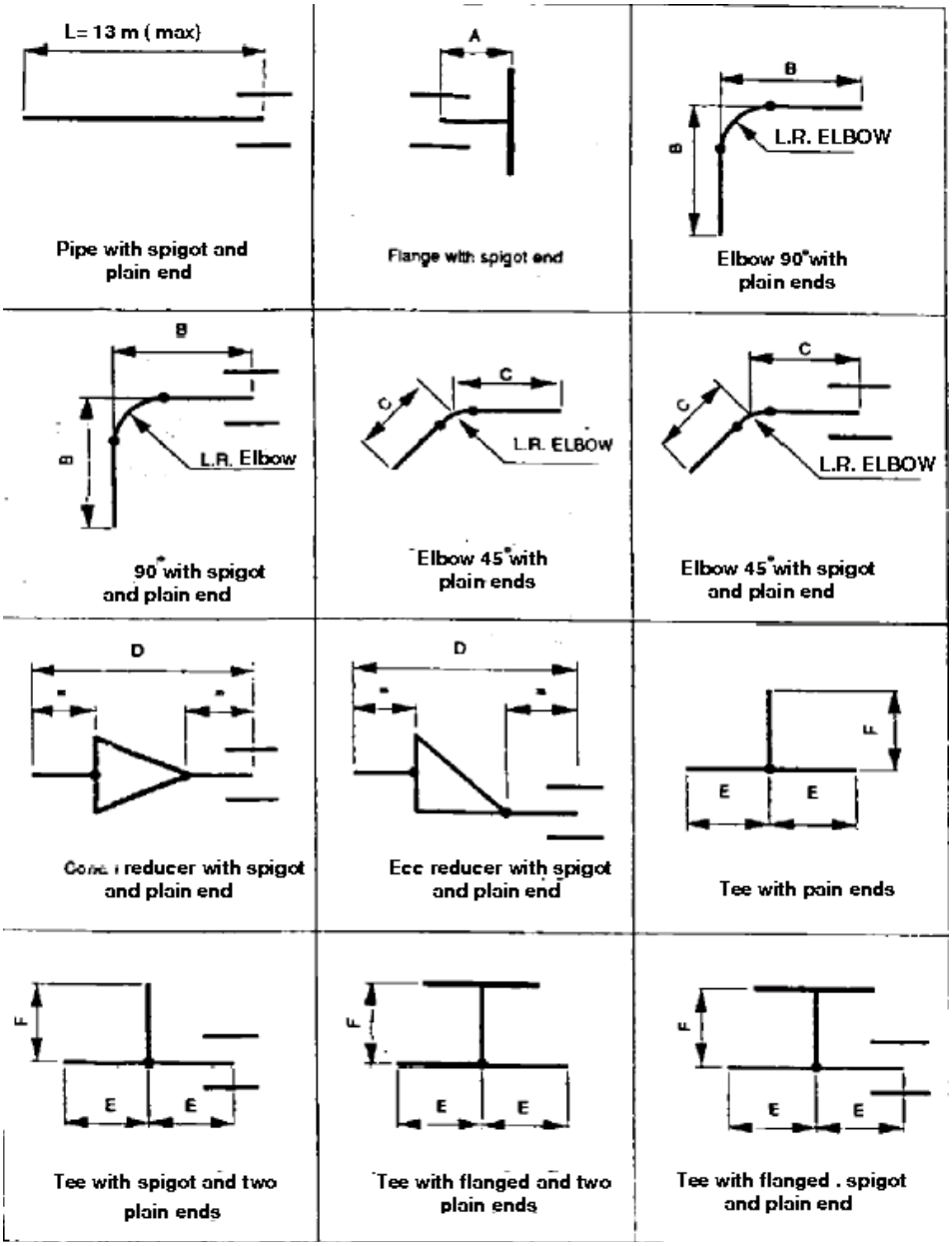

Notes:

1. Butt welding elbows and reducers to ASME/ANSI B 16.9.
2. Flanges (slip-on) raised face or flat face to ANSI B 16.5.
3. For dimensions of sleeves and to lerances of pipe ends see Drawing No. I-5.
4. For flanged ends see Drawing No. I-6.
5. For typical detail of set-on branch see Drawing No. I-7.

DIMENSIONS OF CEMENT-LINED FITTINGS
NOM. SIZE DN 100 THROUGH DN 600
DRAWING No. I-3
(PAGE 1)

(to be continued)

APPENDIX I (continued)

Nom. size (DN) mm	A mm	B mm	C mm	D mm	E mm	F mm
100	135	254	164	---	165	165
150 × 100	---	---	---	440	200	200
150	145	379	245	---	200	200
200 × 100	---	---	---	452	230	230
200 × 150	---	---	---	452	230	230
200	150	455	277	---	230	230
250 × 100	---	---	---	478	230	280
250 × 150	---	---	---	478	230	280
250 × 200	---	---	---	478	280	280
250	165	531	309	---	280	280
300 × 100	---	---	---	---	230	305
300 × 150	---	---	---	503	230	305
300 × 200	---	---	---	503	280	305
300 × 250	---	---	---	503	305	305
300	180	607	340	---	305	305
350 × 100	---	---	---	---	230	355
350 × 150	---	---	---	630	230	355
350 × 200	---	---	---	630	280	355
350 × 250	---	---	---	630	305	355
350 × 300	---	---	---	630	355	355
350	180	683	372	¾	355	355
400 × 100	---	---	---	---	230	380
400 × 150	---	---	---	---	230	380
400 × 200	---	---	---	656	280	380
400 × 250	---	---	---	656	305	380
400 × 300	---	---	---	656	355	380
400 × 350	---	---	---	656	380	380
400	190	760	404	---	380	380

Nom. size (DN) mm	A mm	B mm	C mm	D mm	E mm	F mm
450 × 100	---	---	---	---	230	420
450 × 150	---	---	---	---	230	420
450 × 200	---	---	---	---	280	420
450 × 250	---	---	---	681	305	420
450 × 300	---	---	---	681	355	420
450 × 350	---	---	---	681	380	420
450 × 400	---	---	---	681	420	420
450	205	836	436	---	420	420
500 × 100	---	---	---	---	230	455
500 × 150	---	---	---	---	230	455
500 × 200	---	---	---	---	280	455
500 × 250	---	---	---	---	305	455
500 × 300	---	---	---	808	355	455
500 × 350	---	---	---	808	380	455
500 × 400	---	---	---	808	420	455
500 × 450	---	---	---	808	455	455
500	215	912	468	---	455	455
600 × 100	---	---	---	---	230	560
600 × 150	---	---	---	---	230	560
600 × 200	---	---	---	---	280	560
600 × 250	---	---	---	---	305	560
600 × 300	---	---	---	---	355	560
600 × 350	---	---	---	---	380	560
600 × 400	---	---	---	808	420	560
600 × 450	---	---	---	808	455	560
600 × 500	---	---	---	808	560	560
600	230	1064	531	---	560	560

(to be continued)

APPENDIX I (continued)

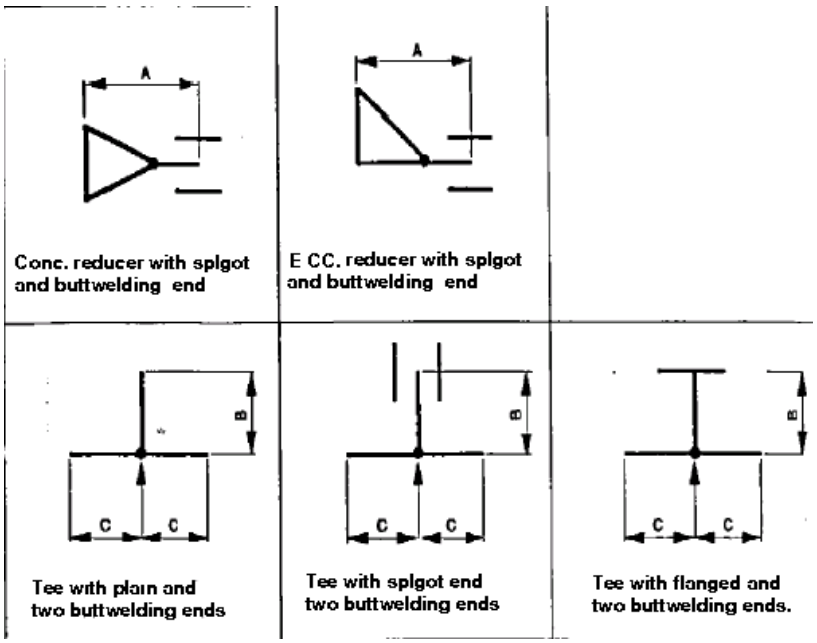

Nom. size (DN) mm	A Mm	C mm	B mm
650 × 300	---	495	536
650 × 350	---	495	559
650 × 400	---	495	559
650 × 450	760	495	584
650 × 500	760	495	602
650 × 600	760	495	635
700 × 300	---	521	562
700 × 350	---	521	584
700 × 400	---	521	584
700 × 450	760	521	610
700 × 500	760	521	628
700 × 600	760	521	660
750 × 300	---	559	587
750 × 350	---	559	610
750 × 400	---	559	610
750 × 450	---	559	635
750 × 500	760	559	653
750 × 600	760	559	685
800 × 350	---	597	635
800 × 400	---	597	635
800 × 450	---	597	661
800 × 500	---	597	678
800 × 600	760	597	711
850 × 400	---	635	660
850 × 450	---	635	686
850 × 500	---	635	704
850 × 600	760	635	736
900 × 400	---	673	686
900 × 450	---	673	712
900 × 500	---	673	729
900 × 600	760	673	762

Notes:
1. Butt welding reducers to ASME/ANSI B 16.9, or may be made from plate.
2. Flanges (slip-on)raised face or flat face to ANSI B 16.5.
3. For dimensions of sleeves and tolerances of pipe ends see Drawing No. I-5.
4. For flanged ends see Drawing No. I-6.
5. For typical detail of set-on branch see Drawing No. I-7.

DIMENSIONS OF CEMENT-LINED FITTINGS
NOM. SIZE DN 650 THROUGH DN 900
DRAWING No. I-4

(to be continued)

APPENDIX I (continued)

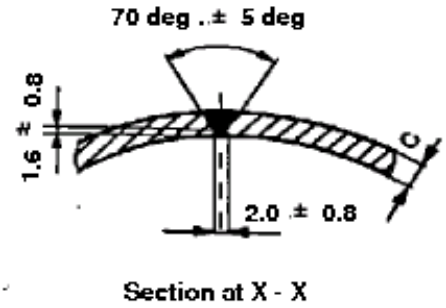

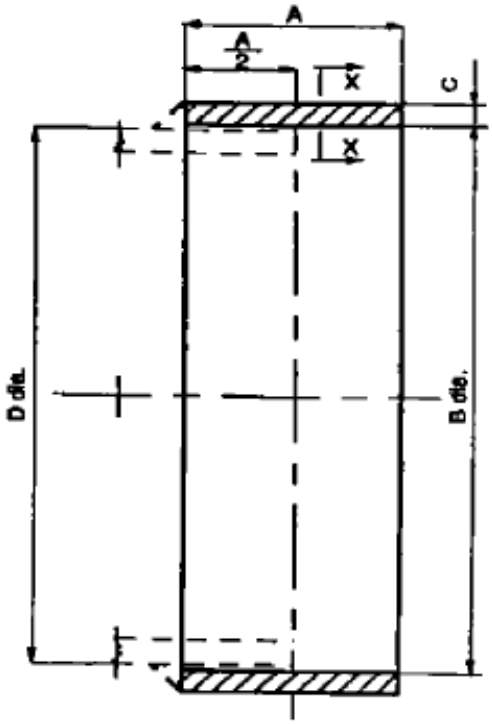

Nom. size (DN) mm	A mm	B Min. mm	B Max. mm	C Min. mm	D Min. mm	D Max. mm
100	100	120	122	6	113.9	115.9
150	150	174	176	8	167.9	169.9
200	150	225	227	8	218.7	220.7
250	150	279	281	8	272.7	274.7
300	150	329	331	8	323.1	326.3
350						
400	150	361	363	8	354.8	358.0
	150	412	414	8	405.6	408.8
450						
500	150	462	464	10	456.2	459.4
600	150	513	515	10	507.2	510.4
	150	616	618	10	609.2	612.4

Notes:

- **Pipe ends must have the tolerance shown in the table for a distance of 100 mm.**
- **Sleeves can also be manufactured from sized pipe.**

SLEEVES

FOR CEMENT-LINED PIPE AND FITTINGS

DRAWING No. I-5

(to be continued)

APPENDIX I (continued)

Fig . 1

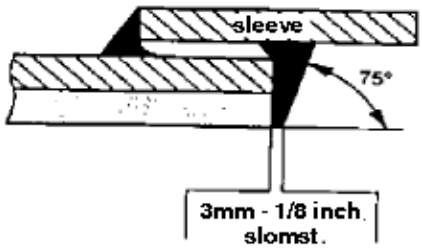

Fig .2

S.R .- SLEEVE RECESS

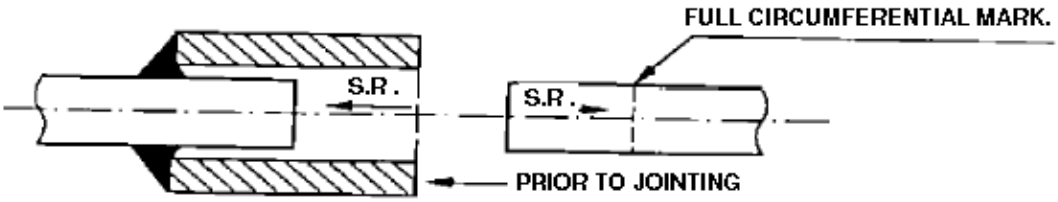

Fig . 2A Fig . 2 B

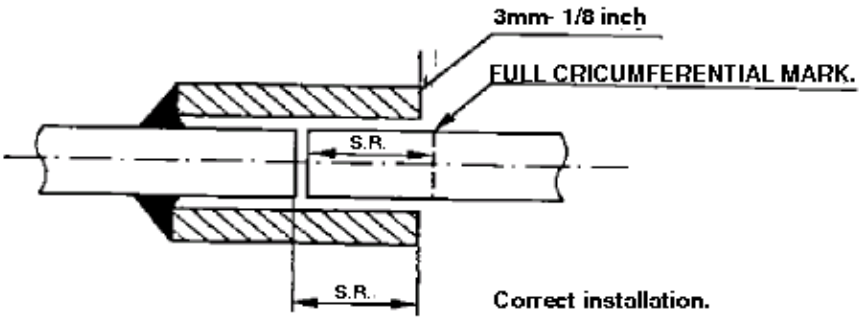

Fig . 2 C

FLANGED ENDS

FOR CEMENT-LIND PIPE AND FITTINGS

DRAWING No. I-6

(to be continued)

APPENDIX I (continued)

Fig . 1

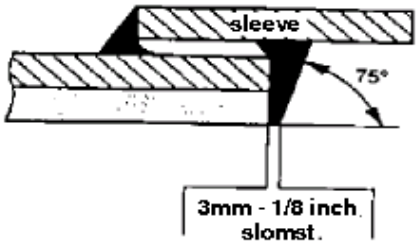

Fig .2

S.R .- SLEEVE RECESS

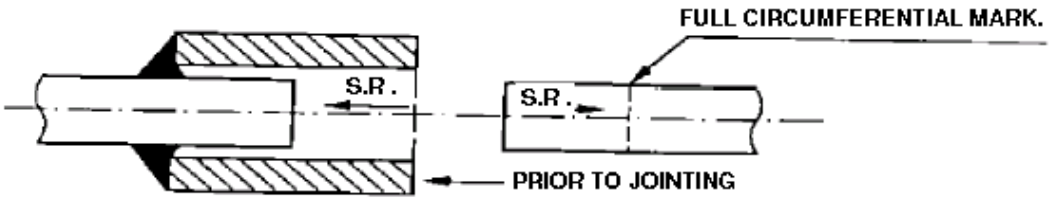

Fig . 2A Fig . 2 B

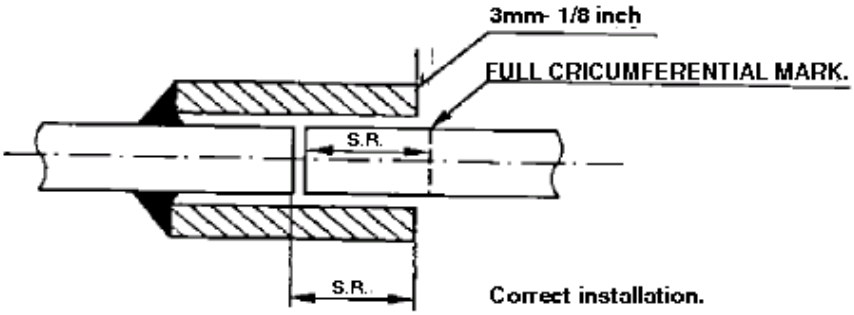

Fig . 2 C

TYPICAL DETAIL OF SET-ON BRANCH

FOR CEMENT-LINED FITTINGS

DRAWING No. I-7

APPENDIX J

REQUIREMENTS FOR GLASS-FIBRE REINFORCED EPOXY PIPES AND FITTINGS

J.1 INTRODUCTION

J.1.1 General

This specification covers the general requirements for the purchase, inspection and transportation of pipes, fittings and flanges made from glass-fibre reinforced epoxy (GRE) which belongs to glass-fibre reinforced thermosetting plastics (GRP).

Described are pipes, fittings and flanges made by the filament-winding, centrifugal casting or pressed-sheet moulding process.

Section J.5 describes the qualification testing program to which a manufacturer is subjected before his first delivery of GRP pipes and fittings.

Section J.6 describes the minimum number of production tests to be carried out for each subsequent delivery of GRP pipes and fittings by a manufacturer whose products have been qualified successfully.

Section J.7 describes the qualification testing procedure.

A number of requirements in this specification are comparable to those of API Specification 15 LR.

This specification does not cover high-pressure piping, as defined by API Spec. 15 LR (approx. 70 bar, (1000 PSI)), casing and tubing and reinforced plastic mortar piping. The Company shall be contacted for those applications.

The requirements of this specification shall be adhered to, except where national and/or local regulations exist in which specific requirements are more stringent.

The contractor shall determine by careful scrutiny which of these requirements are the more stringent and which combination of requirements will be acceptable as regards safety, economics and legal aspects.

In all cases the contractor shall inform the Company of any deviation from the requirements of this specification considered to be necessary to comply with national and/or local regulations. The Company may then negotiate with the authorities concerned with the object of obtaining agreement to follow this specification as closely as possible.

J.2 BASE MATERIALS

All base materials shall be new and unused, and shall be free from all contaminations and imperfections. The base materials, e.g. resins, glass-fibre reinforcing materials, pigments and other materials, when combined as a composite structure, shall produce pipe, fittings and flanges which meet the requirements of this specification. All base materials shall be specified in writing by the pipe manufacturer and certified by the raw materials supplier(s) per delivery.

J.2.1 Epoxy resins

Unless otherwise agreed, the pipes, fittings and flanges shall be made from a bisphenol A epichlorohydrin epoxy resin e.g. "EPIKOTE" 828 and an aromatic or cyclo-aliphatic amine-type curing agent. The manufacturer shall describe the type of resin and curing system chosen.

J.2.2 Glass-Fibre Reinforcement, Fillers and Pigments

Glass-fibre reinforcement for the reinforced wall shall be made of E-glass (i.e. low-alkali glass) meeting an internationally accepted standards such as BS 3691, BS 3396 and shall have a finish

(coupling agent) which is compatible with the epoxy resin.

Fillers are not acceptable. Thixotropic additives added to the resin/curing agent mixture for viscosity control shall not exceed 2% by weight.

Pigments are only acceptable as long as they do not affect the performance of the components as defined in section (J.5) or if agreed with the Company in order to fulfil special application requirements.

J.2.3 Lining Materials

Unless otherwise agreed (J.3.1), flange surfaces and all pipes and fittings which are to be exposed to the fluid, shall have a smooth uniform resin-rich lining consisting of:

- a surfacing mat (tissue) or a veil, which may be either a C-glass (i.e. chemical-resistant glass) or a synthetic fibre, e.g. linear polyester fibres of polyacrylonitrile fibres;
- the same resin which is used for the fabrication of the pipe, fitting or flange.

J.2.4 Adhesives

Adhesive for adhesive-bonded connections shall be of an epoxy type, formulated to be resistant to the product to be conveyed, and for the service temperatures and pressures. It shall be of the type and quality regularly supplied by the pipe manufacturer for the duty intended, and as used for the qualification test (J.5.3.1) and shall have a proven record of good service.

The adhesives shall be provided in a kit containing at least epoxy resin and curing agent (separately in the recommended proportions) and mixing stick, joint cleaner, sandpaper and brush, together with instructions.

The adhesive kit shall have been date stamped at the time of the packaging and shall indicate the required storage conditions and date of expiration of shelf life.

The adhesive kit shelf life at 40°C shall not be less than six months from the date of shipment or 12 months from the date of production.

J.2.5 Rubber Sealing Rings

The sealing rings for the spigot and socket connections shall be made of a rubber type resistant to the product to be conveyed and for the service temperatures and pressures. The manufacturer shall state the type of rubber, providing evidence for its suitability in the proposed application.

J.2.6 Fixation Rod

The fixation rod for thrust-resistant spigot and socket connections with rubber sealing rings shall be made of a flexible thermoplastic material, resistant to the particular service conditions, such as temperature, surrounding environment, ultra-violet exposure etc. The manufacturer shall state the type of thermoplastic material, providing evidence for its suitability in the proposed application.

J.3 DESIGN AND DIMENSIONS

J.3.1 General

The manufacturer shall submit a piping stress analysis based on data for his specific brand and in accordance with ANSI/ASME B 31.3.

The components shall also be designed and manufactured to ANSI/ASME B 31.3.

If the influence of chemicals is to be taken into account, the manufacturer should state the maximum allowable operating conditions for continuous chemical service.

The Company shall specify those applications where the presence of a lining is not mandatory, as in cases where less severe chemical resistance is required or for electrically conductive piping.

The manufacturer shall provide proper installation instructions and, if requested by the Company, adequate supervision at all stages of installation.

J.3.2 Dimensions

J.3.2.1 Pipes

Diameter

The pipe standard for filament-wound pipe may be based on either the inside diameter (Type A) or the outside diameter (Type B). Standard diameters for both types of pipes are given in Table J-1.

Centrifugally cast pipe is based on the outside diameter (Type B).

The inside diameter (Di) of type A1 pipes is equal to the nominal diameter.

The A2 and B1 series are based on a commercial need for pipes with the outside diameters equal to those of pipes made from other materials, e.g. cast iron and steel so as to enable joints to be made to existing pipes without special jointing adapters.

The dimensions of the B1 series are equal to those of Spec. 15 LR.

The B2 series have their outside diameter (Do) related to the nominal diameter (DN) by the equation Do = 1.02 DN + 4 mm.

Wall thickness

The reinforced wall thickness of the pipe shall be sufficient to withstand the temperatures, pressures and service conditions of the particular application. It shall be at least 1.8 mm.

Liner/Top coat

If a lining is specified, its thickness for filament-wound pipe shall be at least 0.5 mm. For centrifugally cast pipe the thickness of this lining shall be at least 1 mm. Pressed-sheet moulding compound (SMC) fittings have no liner but a press skin which shall be at least 0.2 mm thick.

All piping shall have a smooth resin rich top coat.

Ovality

The difference between the largest and smallest diameter (ovality) in each cross section, shall be not more than 0.007 Di (Type A) or 0.007 Do (Type B).

Ends

The pipe shall be supplied with plain ends, with shaved ends, with spigot ends, or with one spigot end and one (integral) socket end or with flanged ends as stated by the Company.

If pipe is to be furnished with threaded ends, threading shall be to API Std. 5B, unless otherwise agreed.

J.3.2.2 Fittings

Fittings shall be supplied with plain ends, spigot ends, integral socket ends, threaded adaptors or flanges as stated by the Company.

The reinforced wall thickness of the fittings shall be sufficient to withstand the temperatures, pressures and service conditions of the particular application. It shall be at least 2.2 mm.

The difference between the largest and smallest measured inside diameter (ovality) shall not be more than 0.007 Di (Type A) or 0.007 Do (Type B).

J.3.2.3 Flanges

The outside diameter and drilling template of flanges shall be in accordance with ANSI B 16.5 class 150. The flange face shall be flat-type.

J.3.3 Prefabricated Piping Systems

Prefabricated piping systems may have adhesive-bonded socket/ spigot connections or hand-laminated butt and strap joints or integral spigots and/or sockets for connections with rubber sealing rings.

The surfaces without a liner at adhesive-bonded connections exposed to the product shall be covered by the adhesive.

The butt and strap joints shall be laminated over a length of at least the pipe diameter on the outside, and if the diameter allows, also on the inside.

All machined or cut surfaces, except the spigot ends, shall receive a coat of resin type, formulated to be resistant to the product to be conveyed and for use at the service temperatures and pressures.

J.4 FABRICATION

Unless otherwise agreed by the Company, the following fabrication/construction methods shall be adhered to.

Filament-wound pipe

Filament-wound pipe shall be manufactured by winding resin-impregnated continuous fibrous glass strand roving or woven glass roving tape on to the outside of a mandrel in a predetermined pattern under controlled tension.

Centrifugal cast pipe

Centrifugal cast pipe shall be manufactured by applying resin and reinforcement to the inside of a mould that is rotated and heated, subsequently polymerizing the resin system.

Fittings and flanges

Fittings shall be of a filament-wound construction. Flanges shall be of a filament-wound construction or a pressed-sheet moulded compound (SMC) construction. In the latter case the length of the reinforcing fibres shall be at least 12 mm. The application of fittings and flanges of another design shall be specifically agreed upon between Company and manufacturer.

J.5 TECHNICAL REQUIREMENTS

J.5.1 General

Pipes and fittings purchased to this specification shall meet the requirements as stated in (J.2), (J.3) and (J.4) and shall further be in accordance with the technical requirements specified in this section.

The raw materials shall be checked against the sales specification as given by the manufacturer of these materials.

The manufacturer shall check for each production batch per shift of eight hours the mixing ratio of resin and curing agent. He shall also record permanently the mixing ratios.

J.5.2 Finished Products

The following qualification requirements apply to the finished products. Manufacturers complying to this Spec. 15 LR shall contact the Company upon the acceptability of tests carried out and as indicated in this section by means of an asterisk (*).

All tests to be carried out at room temperature, unless otherwise indicated.

J.5.2.1* Appearance

Unless otherwise agreed, the inside of pipe and fittings shall have a smooth and uniform lining and be in accordance with ASTM D 2563 level I.

The other parts of pipes and fittings shall be classified according to level II of ASTM D 2563, with the following exceptions:

- air bubble : maximum 2 mm; 3 bubbles/1000 mm^2
- pimple : level III
- pit : level III, but depth less than 10% of the wall thickness

Pipes and fittings shall be uniform in composition and structure, density and other physical properties.

All ends of pipes and fittings shall be cut at right angles to the axis and any sharp edges shall be removed.

J.5.2.2 Curing

The degree of curing of GRE pipe and fittings shall be determined by boiling samples in acetone (dimethyl ethyl ketone) for 3 hours. After boiling and drying to constant weight the samples shall not show more than 2% loss of weight.

The degree of curing may also be assessed by determination of the transition temperature by differential scanning calorimetry (DSC) or differential thermal analysis (DTA) in accordance with ASTM D 3418. The glass-transition temperature shall be at least 110°C.

J.5.2.3 Glass content

J.5.2.3.1 Filament-wound pipe

The glass/resin ratio shall be tested in accordance with EN 60 or ASTM D 2584. The glass content of the filamentwound pipe shall be at least 65% by weight, whereas for filamentwound fittings the glass content shall be at least 55% by weight.

J.5.2.3.2 Centrifugally cast pipes

For the structural wall of centrifugally cast pipes and moulded fittings, the figures shall be at least 45% by weight and 30% by weight respectively.

The maximum glass content shall in all cases be 77% by weight.

J.5.2.4 Consistency of the pipe material

Three samples shall be taken from three places situated 120° apart in the same cross section. The glass content of each sample shall be determined in accordance with EN 60 or ASTM D 2584. The difference in the glass content between two samples shall be not more than 5% by weight.

J.5.2.5 Water absorption

Pipes and fittings shall not show evidence of delamination of other impairment when tested in accordance with ISO 62 or ASTM D 570.

J.5.2.6* Hydrostatic design stress, Pressure ratings and Hydrostatic pressure test

The long-term hydrostatic strength of pipe, fittings, and joints shall be determined in accordance with Procedure A or B of ASTM D 2992. The manufacturer shall select the procedure and the size for these tests. Adhesive joints, if any, shall be included utilizing both the factory and field adhesives and their respective joining and curing procedures, if different. The samples tested shall carry the full end load due to pressure.

Testing shall be conducted at at least 20°C.

The hydrostatic design stress determined in accordance with Procedure A of ASTM D 2992 shall utilize a service (design) factor of 1.0.

The hydrostatic design stress determined in accordance with Procedure B of ASTM D 2992 shall utilize a service (design) factor of 0.5.

Pressure ratings for pipe shall be calculated using the hydrostatic design stress for the specific pipe material and the ISO formula for hoop stress in section 3.2.1 of ASTM D 2992. The minimum reinforced wall thickness shall be identified.

Flanges shall be pressure rated and hydrostatic pressure tested in accordance with ASTM D 4024.

The pipe, pipe spools or pipe joints shall be subjected to a bi-axial loaded hydrostatic pressure test as described in ASTM D 1599.

The GRE pipe, pipe spool or pipe joints shall not display a weeping effect below a hoop stress value of 150 MN/m^2.

The test pressure shall subsequently be increased to 3 times the design pressure and be maintained for at least 5 minutes.

During this pressure test the test specimens shall not show any sign of breakage.

Note:

This test will cause irreversible deformations in the material, so that the test specimens shall be discarded.

J.5.2.7* Stiffness of pipe

The minimum specific tangential initial stiffness (STIS) shall be not less than:

2,500 N/m^2 for 10 bar piping,

Alternatively the pipe stiffness at 5% deflection in accordance with ASTM D 2412 can be determined. In that case the pipe shall be free from cracks or delaminations at a minimum stiffness of:

20 lb/in^2 for 10 bar piping.

J.5.2.8* Beam deflection

The modulus of elasticity of the GRE pipe shall have a minimum of 7,000 MN/m^2 at 90°C when tested in accordance with ASTM D 2925.

J.5.2.9* Impact resistance

A steel ball 50 mm in diameter and weighing approximately 550 g shall be dropped perpendicularly on to the surface of the test pipe with a free fall (which may be guided) of 300 mm.

The ball shall be caught or deflected after the hit so that the rebound does not strike the pipe again. The pipe shall be filled with water containing, if possible, a soluble fluo-rescent dye. The test shall be made at room temperature and the pipe shall be supported on its bottom axis on a solid flat support. Four drops shall be made on randomly selected areas which are separated by a minimum length of one pipe diameter from each other. The test shall be repeated on the same pipe but with the pipe pressurized at the pressure class of the pipe. Four drops shall be made on different areas from those previously used. The pipe shall then be pressurized to 2 times the pressure class rating at 25°C for 5 minutes.

Fittings shall be tested in the same manner except that the drops shall be reduced from four to one in each test.

The pipe or fitting shall not show any porosity or visual delamination when examined, e.g. with an ultra-violet or normal lamp.

J.5.2.10 Linear thermal expansion

The manufacturer shall state in his qualification testing report the coefficient of thermal expansion of a pipe length as determined in accordance with ASTM D 696.

J.5.3 Piping Systems

Upon request of the Company the pipe manufacturer shall provide the following certified documentation for mutually agreed piping diameter(s).

J.5.3.1 Adhesive bonded piping systems

The relevant requirements for the specific component shall also apply for the adhesive bonded piping system.

It is not allowed to apply an additional overlap laminate to the joint to obtain the necessary strength.

J.5.3.2 Spigot and socket with rubber sealing rings joint piping systems

A spigot and socket with rubber sealing rings joint piping assembly shall meet the following requirements:

- No leakages shall occur during hydrostatic pressure testing at 1.5 times the design pressure during 10 minutes, whilst the test sections are deflected angularly in such a way that the center-line of one section of the assembled specimen makes an angle*) of 1.5 degrees with the center-line of the other section.

- The joint assembly shall withstand a combination of a bending force and an internal hydrostatic pressure of 1.5 times the design pressure.

***) Indicated angles not to be used for actual design calculations**

The bending force shall be applied in the middle of the joint and shall be calculated depending on the length of the specimens and the support distance. The applied bending force shall be such that the sum of the occurring axial stresses due to the internal hydrostatic pressure of 1.5 times design

pressure plus the occurring axial stress due to the bending force shall be two times the nominal axial stress.

After having applied the calculated bending force, 10 cycles of 0 to 1.5 times design pressure shall be performed.

The pressure cycle time shall be 10 minutes (5 minutes without pressure, 5 minutes at design pressure).

- The joint assembly shall withstand a combination of a shear force (in N) of 20 times the inside diameter (in mm) and an internal hydrostatic test pressure of two times the design pressure. The test pressure shall be cycled from 0 to the test pressure, 10 times, while holding the shear force. The time for one pressure cycle shall be 10 minutes (5 minutes without pressure, 5 minutes at design pressure).

The test sections shall be deflected while the pipe units are in horizontal position, by applying a load vertically at the spigot end of the joint. The shear force shall be uniformly applied over an arc of not more than 180 degrees along a longitudinal distance of one pipe diameter or 300 mm, whichever is the smaller, from the sealing of the assembled joint, at the unsupported spigot end of the pipe. The specimens in the test shall be supported on blocks, placed immediately behind the bell. Instead of the applied load by external force, the use of own weight of the filled specimen can be chosen.

The joint assembly shall withstand an internal vacuum of 0.74 bar absolute during 10 minutes when

= deflected angularly in such a way that the center-line of one section of the assembled specimen makes an angle*) of 1.5 degrees with the center-line of the other section, and when

= deflected in a horizontal position by a shear force vertically applied at the spigot end of the joint over an arc of not more than 180 degrees along a longitudinal distance of one pipe diameter or 300 mm, whichever is the smaller, from the sealing of the assembled joint, at the unsupported spigot end of the pipe.

Note:

Pressure stabilizing for 30 minutes is allowed.

J.5.3.3 Flanged piping systems

Flanges shall withstand, without any visible sign of damage, a bolt torque of at least 1.5 times that recommended by the manufacturer at the design pressure.

For this test a flanged section shall be bolted against a flat face steel flange. The bolts shall be tightened in 7 N.m increments according to the recommended practice.

Two flanged sections shall be bolted together using the gasket and bolt torque for standard field installation as recommended by the manufacturer. This assembly shall meet the following requirements:

- No leakages shall occur during hydrostatic pressure- testing at 1.5 times the design pressure during 168 hours.

Retorquing to the manufacturers specified level after initial pressurization is permitted.

- No rupture of the flanged connection shall occur during hydrostatic pressure testing at 2 times the design pressure for 10 minutes. Leaking past the gasket interface is permissible during this test. Bolt torque may be increased if necessary during the test in order to minimize gasket leaking and to achieve the pressure necessary to cause flange failure.

J.5.3.4 Threaded piping systems

The qualification testing of threaded piping systems shall be in accordance with the requirements given by the Company.

***) Indicated angles not to be used for actual design calculations**

J.6 INSPECTION AND TESTING

J.6.1 General

This section describes the minimum number of acceptance tests required for each delivery of GRP pipes and fittings purchased to this specification from a manufacturer whose products have been qualified successfully (J.5).

Additional tests may be established by mutual agreement between the manufacturer/contractor and the Company prior to any contract award.

If the material fails to pass any of these tests, this may constitute sufficient cause for rejection.

J.6.2 Acceptance Tests

J.6.2.1 Visual inspection

All pipes and fittings shall be visually inspected in accordance with (J.5.2.1).

J.6.2.2 Dimensions

The dimensions of all pipes and fittings (J.3.2) shall be checked in accordance with ASTM D 3567.

J.6.2.3 Curing

The degree of curing of each lot[1)] of pipe and fittings (J.5.2.2) shall be checked at random by means of a Barcol impressor (ASTM D 2583 or EN 59) and shall have a minimum value of 40.

J.6.2.4 Glass content[2)]

The glass content of each lot[1)] of pipe and fittings shall be checked, see (J.5.2.3).

J.6.2.5 Hydrostatic pressure test

All pipes furnished under this specification shall be subjected to a hydrostatic pressure test at room temperature. The test pressure shall be equal to 1.5 times the pressure class rating and be maintained for at least 5 minutes.

During the pressure test the pipes and/or fittings shall not show any sign of leakage.

Unless otherwise agreed all fittings, pipe spools and prefabricated piping shall be hydrostatic-pressure-tested at 1.5 times the pressure class rating of the pipe.

The Company shall be contacted for those cases where testing of pipe spools would result in damage of the pipe ends caused by the end caps.

J.6.2.6 Impact resistance[2)]

The impact resistance of each lot[1)] of pipe and fittings shall be checked (J.5.2.9).

Notes:

1) Unless otherwise agreed, a lot of pipe shall consist of 900 meters or a fraction thereof and

a lot of fittings of one fitting, both of one size, wall thickness and grade.

2) These tests are destructive tests; if appropriate a deviation of test frequency shall be established by agreement between the manufacturer and the Company.

J.7 QUALIFICATION TESTING

The full program of qualification testing is required before a manufacturer will be allowed to deliver for the first time. The Company may require to repeat, completely or in part, the qualification testing of a certain make, for example because of time elapsed or new developments.

Changes in the design and/or method of manufacture of pipes and/or fittings will in any case require new or additional qualification tests.

The qualification testing shall be carried out on products with representative diameters. The type of product, its pressure and temperature rating and number etc. shall be mutually agreed with the Company.

Representative diameters and products:

Representive products	Pipe, elbow 90°, equal lateral and reducer			
Representive diameter (mm)	50	150	300	600
Diameter range (mm)	25 40 50	80 100 150	200 250 300	350 400 450 500 600

Qualification testing as described in (J.5) shall be carried out by the manufacturer and witnessed and certified by an independent authority recognized by SIPM. Alternatively, testing and certification may be carried out by an independent testing organization. This shall be confirmed by submitting a certificate stating the test results.

The Company shall be contacted for those cases where the material will be accepted and released pending some time consuming qualification tests (e.g. the beam deflection test). Such tests may be accepted on their satisfactory completion and the material will then receive the final clearance.

The manufacturer shall state in his qualification testing report, the coefficient of thermal expansion of a pipe length as determined in accordance with ASTM D 696.

J.8 DOCUMENTATION

J.8.1 Quality Control

The manufacturer will be evaluated for ability to perform adequate and sufficient quality control (including inspections and tests performed at sufficient intervals before and during production) to ensure that proper and correct base materials are being used, that the finished material meets physical and chemical specifications and that the finished product meets all dimensional and performance requirements.
BS 5750 will be used as a guideline in this respect.
In order to assure traceability of materials and products, the manufacturer shall keep a record of all quality control tests performed and shall maintain this record for a minimum period of five years from the date of manufacture.

J.8.2 Manufacturers Drawings

J.8.2.1 Pipes
The following pipe dimensions and tolerances, when applicable, shall be stated by the manufacturer and shall be in accordance with the certified manufacturers drawings:

- pipe inside/outside diameter
- minimum total wall thickness
- overall pipe length
- effective pipe length
- outside/inside diameter of the end
- length of joint
- conical form of spigot/socket
- spigot or socket chamber for rubber sealing rings and for fixation rod
- shear length, i.e. distance between chamber for rubber sealing rings and fixation rod.

J.8.2.2 Fittings
The following fitting dimensions and tolerances, where applicable, shall be stated by the manufacturer and shall be in accordance with the certified manufacturers drawings:

- fitting inside/outside diameter
- minimum total wall thickness
- overall fitting length
- effective fitting length
- conical form of spigot/socket taper
- length of joint
- spigot or socket chamber for rubber sealing ring and for fixation rod
- shear length, i.e. distance between chamber for rubber sealing ring and fixation rod.

J.8.2.3 Flanges
The following flange dimensions, where applicable shall be stated by the manufacturer and shall be in accordance with the certified manufacturers drawings:

- thickness of the flange
- rating
- bolt hole circle and diameter.

J.8.2.4 Prefabricated piping systems
The following flange dimensions, where applicable, shall be stated by the manufacturer and shall be in accordance with the certified manufacturers drawings:

- items as indicated in (J.8.2.1), (J.8.2.2) and (J.8.2.3)
- face-to-face, center-line-to-face and center-line-to-center-line
- lateral off-set of flanges
- flange face alignment.

J.8.3 Certification
The manufacturer shall keep complete quality control and test reports. He shall submit a certified record of inspection and testing together with a statement of compliance with the requirements. These shall also include the certificates of the steel parts, if any.
If appropriate, he shall issue a list, showing each deviation from the purchase order.

J.9 MARKING AND PACKAGING

J.9.1 Marking
All pipes and fittings shall be permanently marked with the manufacturer's name or trade name, the pressure class, the nominal diameter and vendor's identification code.
The marking shall remain legible under normal handling and installation practices.
Markings for identification purposes shall be made in such a manner as not to impair the integrity of the pipe/fittings material.

J.9.2 Packaging
The pipes and fittings shall be packed in a manner which will ensure arrival at destination in a satisfactory condition and which will be acceptable to the Company. Pipe ends shall be protected

with suitable protective covers. The covers shall be securely attached.
Fastening is necessary where container transportation is used, to ensure immobilization of pipe joints.
The bottom of crates shall be provided with skids to facilitate handling by forklift truck.

TABLE J-1 STANDARD DIAMETERS OF GRP PIPES[1)]

Nominal pipe size DN		Type A (based on inside diameter)		Type B (based on outside diameter)	
in mm	in inch	Type A1 Di in mm	Type A2 Di in mm	Type B1[2)] Do in mm	Type B2 Do in mm
25	1	25	27	33.7	30
40	1.5	40	40	48.3	45
50	2	50	53.1	60.3	55
80	3	80	81.8	88.9	86
100	4	100	105.2	114.3	106
150	6	150	159	168.3	157
200	8	200	208.8	219.1	208
250	10	250	262.9	273	259
300	12	300	313.7	323.9	310
350	14	350	344.4		
400	16	400	393.7	429	412
450	18	450	433.8		
500	20	500	482.1	532	514
600	24	600	578.6	635	616
700	28	700		738	718
750	30	750	723.1		
800	32	800		842	820
900	36	900	867.9	945	922
1000	40	1000		1048	1024
1200		1200		1255	1228
1400		1400		1462	1432
1600		1600		1668	1636
1800		1800		1875	1840
2000		2000			2044
2400		2400			2452
2800		2800			2860
3200		3200			3268
3600		3600			3676
4000		4000			4084

Notes:

1) These dimensions are not yet accepted and approved by the ISO Council. Some manufacturers fabricate pipes with outside diameters which completely differ from those mentioned in the table.

2) These dimensions are equal to the dimensions given in API Spec. 15 LR.

APPENDIX K

PIPE COMPONENTS - NOMINAL SIZE

The purpose of this Appendix is to establish an equivalent identity for the piping components-nominal sizes in Imperial System and SI System.

TABLE K - 1

NOMINAL SIZE	
DN 1)	NPS 2)
15	½
20	3/4
25	1
32	1¼
40	1½
50	2
65	2½
80	3
90	3½
100	4
125	5
150	6
200	8
250	10
300	12
350	14
400	16
450	18
500	20
600	24

1) Diameter nominal, mm

2) Nominal pipe size, inch

APPENDIX L

PIPE FLANGES PRESSURE TEMPERATURE RATING

The purpose of this Appendix is to establish an equivalent identity for the pipe flange nominal pressure temperature ratings in Imperial system and SI System.

TABLE L – 1

PN [1)]	ANSI RATING (CLASS) [2)]
20	150
50	300
100	600
150	900
250	1500
420	2500

1) Pressure Nominal, bar

2) Pounds per square inch, gage

APPENDIX M

EXTENDED SERVICE LIMITS FOR PIPING CLASSES AT ELEVATED TEMPERATURE

- In piping classes, the use of bolting material to ASTM A193-B7 and ASTM A194-Gr.2H is limited to a maximum temperature of 450°C. However, for a number of applications the temperature limit can be as high as 538°C because of service experience in the given situations. For those higher temperatures, the flanged connections and bolting shall be uninsulated.

- For piping classes with a temperature allowance to 538°C, the extended service limits should be as hereunder:

Piping class CP04 - extended service limits:

Temperature, °C		475	500	525	538
Pressure,	bar ga	31	27	20	12

Piping class FP04 - extended service limits:

Temperature, °C		475	500	525	538
Pressure,	bar ga	63	55	40	25

APPENDIX N

VENT, DRAIN, AND PRESSURE INSTRUMENTS CONNECTIONS ASSEMBLIES

This appendix contains sketches of assembly configurations. The figure number used in the assembly, appears on page 5 of the piping class, consists of a two digit code. The first digit identifies the type of valves and the second digit identifies the type of connection.

SYMBOL LEGEND

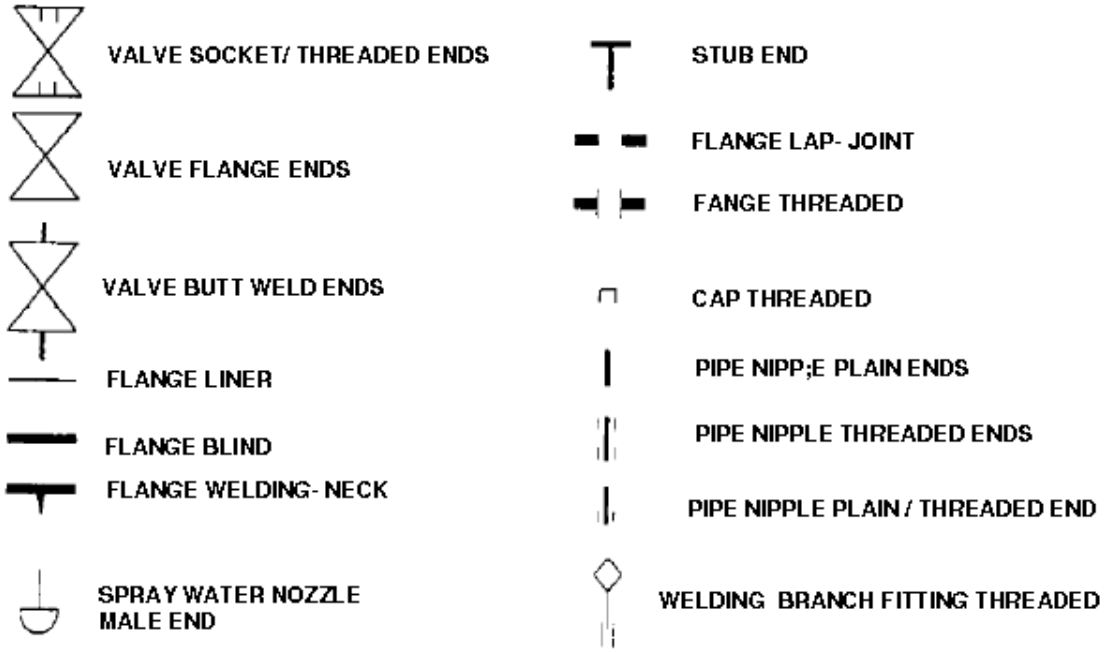

Note:

The above symbols, exclusively are used for this Appendix.

VALVE TYPE IDENTIFICATION LEGEND

0: GATE VALVE (except threaded ends)

1: GLOBE VALVE (except threaded ends)

2: REDUCED BORE BALL VALVE

3: FULL BORE BALL VALVE

4: PLUG VALVE

5: BALL VALVE (in combination with o-ring groove in counter flange)

6: THREADED GLOBE / GATE VALVE

7: DIAPHRAGM VALVE

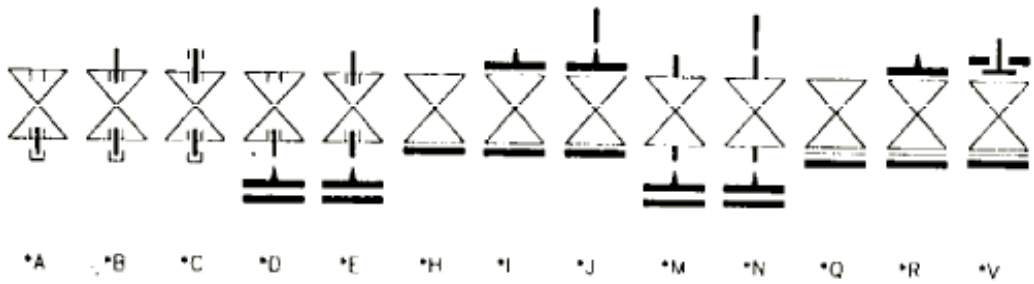

VENT CONNECTION SKETCHES

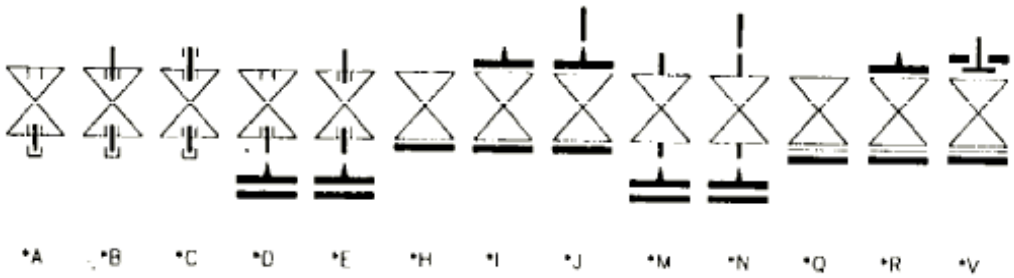

FOR PRESSURE INSTRUMENT CONNECTION REFERENCE IS MADE TO IPS-D-IN-104

PART TWO

0. INTRODUCTION

This Standards is prepared in three parts, which are separately bindered as follow:

Part I General (guidance on the application of piping classes).
Part II Piping class rating: PN 20 (150) and PN 50 (300).
Part III Piping class rating: PN 100 (600), PN 150 (900) , PN 250 (1500) and PN 420 (2500).

Class No.: AN01	Page: 1	Content: General
Base Material: Carbon Steel	First Issue: Revision	
Rating: PN 20 (Class 150)	Date:	
Corrosion Allowance: 1 mm	Sign:	

Temperature °C		0	50	100	150	200	250	300	350	400
Pressure Barg.	DN 15-600	19.6	16.2	17.6	15.8	13.9	12.0	10.2	8.3	6.5

TABLE OF SCHEDULES

DN	Schedule
15	80
20	80
25	80
40	80
50	40
80	40
100	40
150	40
200	20
250	20
300	20
350	20
400	20
450	20
500	20
600	20

BRANCH CONNECTIONS 90 DEGREES

BRANCH SIZE

Run Size	15	20	25	40	50	80	100	150	200	250	300	350	400	450	500	600
600	C	C	C	C	E	E	E	E	E	E	E	E	E	E	E	A
500	C	C	C	C	D	D	D	D	D	D	D	D	D	D	A	
450	C	C	C	C	E	D	D	D	E	E	E	E	E	A		
400	C	C	C	C	D	D	D	D	D	D	D	D	A			
350	C	C	C	C	D	D	D	D	D	D	D	A				
300	C	C	C	C	D	D	D	D	D	D	A					
250	C	C	C	C	D	D	D	D	D	A						
200	C	C	C	C	D	D	D	D	A							
150	C	C	C	C	D	D	D	A								
100	C	C	C	C	D	D	A									
80	C	C	C	C	D	A										
50	C	C	C	B	A											
40	C	B	B	A												
25	B	B	A													
20	B	A														
15	A															

NOTES:

CODE	EXPLANATION OF CHARACTERS
A	Equal tee
B	Reducing tee
C	Branch outlet socket-weld end

Design limits are acc. flange rating ANSI B16.5 Material Group 1.1.
-Piston type check valves for horizontal mounting only.
- For level gages, recommended max. temperature differential (ambient to fluid) 256°C.
-Application of other types of branch connections is subject to company approval.
- For connections class 300, use equivalent class 300 for flange, bolting and gasket selection

D Pipe to pipe
E Branch outlet butt-weld end

Class No.:	AN01	Page:	2	Content:	Material Descriptions

* PIPE

PIPE	Pipe	DN	15-100	API 5L-B	SML
		DN	150-500	API 5L-B	ERW
		DN	600	API 5L-B	SAW
		DN	15-600	ASTM	A 106 B
PNPP	Pipe Nipple 50 mm	DN	15-40	ASTM	A 106 B

* FLANGES

BLFL	Blind Flange	DN	15-600	ASTM	A105
SBFL	Spectacle Blind Flange	DN	15-600	ASTM	A516-60
SPRT	Spacer Ring Type (ANS Flanges)	DN	15-600	ASTM	A516-60
WNFL	Welding Neck Flange	DN	15-600	ASTM	A105

* FITTINGS

CAPB	Cap	Butt-Weld. End	DN	15-600	ASTM	A234-WPB
E45B	Elbow 45 Deg.	Butt-Weld. End	DN	15-600	ASTM	A234-WPB
E90B	Elbow 90 Deg.	Butt-Weld. End	DN	15-600	ASTM	A234-WPB
TEEB	Equal Tee	Butt-Weld. End	DN	15-600	ASTM	A234-WPB
E45S	Elbow 45 Deg.	Socket-Weld. End	DN	15-40	ASTM	A105
E90S	Elbow 90 Deg.	Socket-Weld. End	DN	15-40	ASTM	A105
TEES	Equal Tee	Socket-Weld. End	DN	15-40	ASTM	A105
COUS	Coupling	Socket-Weld. End	DN	15-40	ASTM	A105
CAPT	Cap	Threaded Inside	DN	15-40	ASTM	A105

* REDUCING FITTINGS

BROS	Branch Outlet Socket-Weld. End	DN	15-40	ASTM	A105
BROB	Branch Outlet Butt-Weld. End	DN	50-600	ASTM	A105

* VALVES

CHVF	Check Valve Flanged	DN	15-40	Body:	ASTM	A216-WCB/WCC, A105
				Trim:	AISI	316 (L) + Stellite 6, 410
		DN	50-600	Body:	ASTM	A216-WCB/WCC, A105
				Trim:	AISI	410
CHVS	Check Valve Socke t	DN	15-40	Body:	ASTM	A216-WCB/WCC, A105
				Trim:	AISI	316 (L) + Stellite 6, 410
GAVF	Gate Valve Flanged	DN	15-40	Body:	ASTM	A216-WCB/WCC, A105
				Trim:	AISI	316 (L) + Stellite 6, 410
		DN	50-600	Body:	ASTM	A216-WCB/WCC, A105
				Trim:	AISI	410
GAVS	Gate Valve Sw	DN	15-40	Body:	ASTM	A216-WCB/WCC, A105
				Trim:	AISI	316 (L) + Stellite 6, 410
GLVF	Globe Valve Flanged	DN	15-40	Body:	ASTM	A216-WCB/WCC, A105
				Trim:	AISI	316 (L) + Stellite 6, 410
		DN	50-200	Body:	ASTM	A216-WCB/WCC, A105
				Trim:	AISI	410
GLVS	Globe Valve Socket	DN	15-40	Body:	ASTM	A216-WCB/WCC, A105
				Trim:	AISI	316 (L) + Stellite 6, 410

* MISCELLANEOUS

GKTI	Gasket, C.A.F	DN	15-600	C.A.F		
ORFS	Orifice Flange Set	DN	50-600		ASTM	A105
STBT	Stud Bolt with Nuts		---	Studs:	ASTM	A193-B7
				Nuts:	ASTM	A194-2H

RECB	Reducer Conc. Butt-Weld. End	DN	20-600	ASTM	A234-WPB
REEB	Reducer Ecc. Butt-Weld. End	DN	20-600	ASTM	A234-WPB
TERB	Tee Reducing Butt-Weld. End	DN	20-600	ASTM	A234-WPB
TERS	Tee Reducing Socket-Weld. End	DN	20-40	ASTM	A105

Notes:
- For full material description see relevant MESC buying description.
- Where both API 5L and ASTM A106 pipes are specified, preference is subject to company approval.
- Where both butt-weld end and socket weld end Fitings are specified, preference is subject to company approval.

Class No.: AN01	Page: 3	Content: Piping Components

ITEM DESCRIPTION		NOMINAL PIPE SIZE 15	20	25	40	50	80	100	150	200	250	300	350	400	450	500	600
* PIPE																	
Pipe API-5L GR.B SML	74.13.21	*	*	*	*	*	*	*									
API-5L GR.B ERW	74.13.23								*	*	*	*	*	*	*	*	
API-5L GR.B SAW	74.13.23																*
ASTM A 106 B	74.30.21	*	*	*	*	*	*	*	*	*	*	*	*	*	*	*	*
Pipe nipple (50 mm) ASTM A 106 B	76.05.56	*	*	*	*												
* FLANGES																	
Blind Flange	76.62.10	*	*	*	*	*	*	*	*	*	*	*	*	*	*	*	*
Spectacle Blind Flange	76.88.06	*	*	*	*	*	*	*	*	*	*	*	*	*	*	*	*
Spacer Ring Type (ANS Flanges)	76.88.16	*	*	*	*	*	*	*	*	*	*	*	*	*	*	*	*
Welding Neck Flange	76.62.79	*	*	*	*	*	*	*	*	*	*	*	*	*	*	*	*
* FITTINGS																	
Cap Butt-Weld. End	76.30.18	*	*	*	*	*	*	*	*	*	*	*	*	*	*	*	*
Elbow 45 Deg. Butt-Weld. End	76.30.38	*	*	*	*	*	*	*	*	*	*	*	*	*	*	*	*
Elbow 90 Deg. Butt-Weld. End	76.30.39	*	*	*	*	*	*	*	*	*	*	*	*	*	*	*	*
Elbow 90 Deg. Butt-Weld. End	76.30.40	*	*	*	*	*	*	*	*	*	*	*	*	*	*	*	*
Equal Tee Butt-Weld. End	76.30.84	*	*	*	*	*	*	*	*	*	*	*	*	*	*	*	*
Elbow 45 Deg. Socket-Weld. End	76.34.38	*	*	*	*												
Elbow 90 Deg. Socket-Weld. End	76.34.39	*	*	*	*												
Equal Tee Socket-Weld. End	76.34.84	*	*	*	*												
Coupling Socket-Weld. End	76.34.28	*	*	*	*												
Cap Threaded	76.05.18	*	*	*	*												
* VALVES																	
Check Valve Flanged	75.37.12	*	*	*	*	*	*	*	*	*	*	*	*	*	*	*	*
Check Valve Socket	75.56.13	*	*	*	*												
Gate Valve Flanged	75.37.32	*	*	*	*	*	*	*	*	*	*	*	*	*	*	*	*
Gate Valve Sw	75.56.35	*	*	*	*												

Globe Valve Flanged	75.37.42	*	*	*	*	*	*	*	*	*							
Globe Valve Socket	75.56.45	*	*	*	*												
* MISCELLANEOUS																	
Gasket, RF. C.A.F	85.31.15/17*	*	*	*	*	*	*	*	*	*	*	*	*	*	*	*	*
Orifice Flange set	76.83.00				*	*	*	*	*	*	*	*	*	*	*	*	*

Class No.: AN01 | Page: 4 | Content: Reducing Piping Components

Run	Br.	BROB 76.80.05	RECB 76.30.72	REEB 76.30.73	TERB 76.30.85	TERS 76.34.85
20 ×	15		*	*	*	*
25 ×	15		*	*	*	*
25 ×	20		*	*	*	*
40 ×	15		*	*	*	*
40 ×	20		*	*	*	*
40 ×	25		*	*	*	*
50 ×	20		*	*		*
50 ×	25		*	*		
50 ×	40		*	*	*	
80 ×	40		*	*		
80 ×	50	*	*	*	*	
100 ×	40		*	*		
100 ×	50	*	*	*	*	
100 ×	80	*	*	*	*	
150 ×	50	*				
150 ×	80	*	*	*	*	
150 ×	100	*	*	*	*	
200 ×	50	*				
200 ×	80	*				
200 ×	100		*	*	*	
200 ×	150		*	*	*	
250 ×	50	*				
250 ×	80	*				
250 ×	100	*	*	*	*	
250 ×	150		*	*	*	
250 ×	200			*	*	*
300 ×	50		*			
300 ×	80		*			
300 ×	100		*			
300 ×	150			*	*	*
300 ×	200			*	*	*
300 ×	250			*	*	*
350 ×	50		*			

Run	Br.	BROB 76.80.05	RECB 76.30.72	REEB 76.30.73	TERB 76.30.85
400 ×	50	*			
400 ×	80	*			
400 ×	100	*			
400 ×	150	*	*	*	*
400 ×	200		*	*	*
400 ×	250		*	*	*
400 ×	300		*	*	*
400 ×	350		*	*	*
450 ×	50	*			
450 ×	80	*			
450 ×	100	*			
450 ×	150	*			
450 ×	200	*	*	*	*
450 ×	250		*	*	*
450 ×	300		*	*	*
450 ×	350		*	*	*
450 ×	400		*	*	*
500 ×	50	*			
500 ×	80	*			
500 ×	100	*			
500 ×	150	*			
500 ×	200	*	*	*	*
500 ×	250		*	*	*
500 ×	300		*	*	*
500 ×	350		*	*	*
500 ×	400		*	*	*
500 ×	450	*	*	*	*
600 ×	50	*			
600 ×	80	*			
600 ×	100	*			
600 ×	150	*			
600 ×	200	*			
600 ×	250	*	*	*	*

COMP. NAME	DESCRIPTION
BROS	Branch Outlet Socket-Weld. End
BROB	Branch Outlet Butt-Weld. End
RECB	Reducer Conc. Butt-Weld. End
REEB	Reducer Ecc. Butt-Weld. End
TERB	Tee Reducing Butt-Weld. End
TERS	Tee Reducing Socket-Weld. End

RUN	Br.	BROS 76.80.28
40-150	15	*
200-600		*
40-80	20	*
100-600		*
50	25	*
80-100		*
150-600		*
80-100	40	*
150-300		*
35-600		*

350 ×	80	*						600 ×	300		*	*	*
350 ×	100	*						600 ×	350		*	*	*
350 ×	150		*	*	*			600 ×	400		*	*	*
350 ×	200		*	*	*			600 ×	450	*	*	*	*
350 ×	250		*	*	*			600 ×	500	*	*	*	*
350 ×	300		*	*	*								

Class No.: AN01	Page: 5	Content: Bolting and Assemblies

BOLT SET FLANGED JOINTS

DN	No.	Inch		mm	81.38.61
15	4	1/2	×	60	*
20	4	1/2	×	70	*
25	4	1/2	×	70	*
40	4	1/2	×	80	*
50	4	5/8	×	80	*
80	4	5/8	×	100	*
100	8	5/8	×	100	*
150	8	3/4	×	100	*
200	8	3/4	×	110	*
250	12	7/8	×	120	*
300	12	7/8	×	120	*
350	12	1	×	130	*
400	16	1	×	140	*
450	16	1-1/8	×	150	*
500	20	1-1/8	×	160	*
600	20	1-1/4	×	180	*

BOLT SET SPECTACLE/SPACER

DN	No.	Inch		mm	81.38.61
15	4	1/2	×	70	*
20	4	1/2	×	70	*
25	4	1/2	×	80	*
40	4	1/2	×	80	*
50	4	5/8	×	90	*
80	4	5/8	×	110	*
100	8	5/8	×	110	*
150	8	3/4	×	120	*
200	8	3/4	×	130	*
250	12	7/8	×	140	*
300	12	7/8	×	150	*
350	12	1	×	160	*
400	16	1	×	170	*
450	16	1-1/8	×	180	*
500	20	1-1/8	×	195	*
600	20	1-1/4	×	220	*

BOLT SET ORIFICE FLANGES

DN	No.	Inch		mm	81.38.61
15	4	5/8	×	120	*
20	4	5/8	×	120	*
25	4	5/8	×	120	*
40	4	3/4	×	130	*
50	8	5/8	×	150	*
80	8	3/4	×	150	*
100	12	3/4	×	140	*
150	12	3/4	×	140	*
200	12	7/8	×	150	*
250	16	1	×	170	*
300	16	1-1/8	×	190	*
350	20	1-1/8	×	195	*
400	20	1-1/4	×	210	*
450	24	1-1/4	×	220	*
500	24	1-1/4	×	230	*
600	24	1-1/2	×	260	*

* DRAIN POINT	Fig. 0B
Run DN 15-25 Br DN 15	NO.
Branch: Table Page 1	1
Cap Threaded	1
Gate Valve SW	1
Pipe Nipple 50 mm	1
Pipe Nipple Plain/Threaded	1

* DRAIN POINT	Fig. 0B
Run DN 40-600 Br DN 20	No.
Branch: Table Page 1	1
Cap Threaded	1
Gate Valve SW	1
Pipe Nipple 50 mm	1
Pipe Nipple Plain/Threaded	1

* VENT POINT	Fig. 1B
Run DN 15-25 Br DN 15	NO.
Branch: Table Page 1	1
Cap Threaded	1
Globe Valve Socket	1
Pipe Nipple 50 mm	1
Pipe Nipple Plain/Threaded	1

* VENT POINT	Fig. 1B
Run DN 40-600 Br DN 20	No.
Branch: Table Page 1	1
Cap Threaded	1
Globe Valve Socket	1
Pipe Nipple 50 mm	1
Pipe Nipple Plain/Threaded	1

Class No.: AN02	Page: 1	Content: General
Base Material: Carbon Steel	First Issue: Revision:	
Rating: PN 20 (Class 150)	Date:	
Corrosion Allowance: 1 mm	Sign:	

Temperature °C		0	50	75	100	125	150	175	300
Pressure Barg	DN 15-80	19.6	19.2	18.4	17.6	16.7	15.8	14.8	110
	DN 100-150	19.6	19.2	18.4	17.6	16.7	15.8	14.8	9.0
	DN 200-600	19.6	19.2	18.4	17.6	16.7	15.8	12.0	7.0

TABLE OF SCHEDULES

DN	Schedule
15	80
20	80
25	80
40	80
50	40
80	40
100	40
150	40
200	20
250	20
300	20
350	20
400	20
450	20
500	20
600	20

BRANCH CONNECTIONS 90 DEGREES
BRANCH SIZE

Run Size	15	20	25	40	50	80	100	150	200	250	300	350	400	450	500	600
600	C	C	C	C	E	E	E	E	E	E	E	E	E	E	E	A
500	C	C	C	C	E	E	E	E	E	E	E	E	E	E	A	
450	C	C	C	C	E	E	E	E	E	E	E	E	E	A		
400	C	C	C	C	E	E	E	E	E	E	E	E	A			
350	C	C	C	C	D	D	D	D	D	D	D	A				
300	C	C	C	C	E	E	E	E	E	E	A					
250	C	C	C	C	D	D	D	D	D	A						
200	C	C	C	C	D	D	D	D	A							
150	C	C	C	C	D	D	D	A								
100	C	C	C	C	D	D	A									
80	C	C	C	C	D	A										
50	C	C	C	B	A											
40	C	B	B	A												
25	B	B	A													
20	B	A														
15	A															

Notes:

-Design limits are acc. flange rating ANSI B16.5 Material Group 1.1 and ball valve rating acc. BS 5351.
-Piston type check valves for horizontal mounting only
-Application of other types of branch connections is subject to company approval
- For connections class 300, use equivalent class 300 for flange, bolting and gasket selection.

CODE	EXPLANATION OF CHARACTERS
A	Equal tee
B	Reducing tee
C	Branch outlet socket-weld. End
D	Pipe to pipe
E	Branch outlet butt-weld. end

Class No.: AN02	Page: 2	Content: Material Descriptions

* PIPE

PIPE	Pipe	DN	15-100	API 5L-B	SML
		DN	150-500	API 5L-B	ERW
		DN	600	API 5L-B	SAW
		DN	15-600	ASTM	A 106 B
PNPP	Pipe Nipple 50 mm	DN	15-40	ASTM	A 106 B

* FLANGES

BLFL	Blind Flange	DN	15-600	ASTM	A105
SBFL	Spectacle Blind Flange	DN	15-600	ASTM	A516-60
SPRT	Spacer Ring Type (ANS Flanges)	DN	15-600	ASTM	A516-60
WNFL	Welding Neck Flange	DN	15-600	ASTM	A105

* FITTINGS

CAPB	Cap	Butt-Weld. End	DN	15-600	ASTM	A234-WPB
E45B	Elbow 45 Deg.	Butt-Weld. End	DN	15-600	ASTM	A234-WPB
E90B	Elbow 90 Deg.	Butt-Weld. End	DN	15-600	ASTM	A234-WPB
TEEB	Equal Tee	Butt-Weld. End	DN	15-600	ASTM	A234-WPB
E45S	Elbow 45 Deg.	Socket-Weld. End	DN	15-40	ASTM	A105
E90S	Elbow 90 Deg.	Socket-Weld. End	DN	15-40	ASTM	A105
TEES	Equal Tee	Socket-Weld. End	DN	15-40	ASTM	A105
COUS	Coupling	Socket-Weld. End	DN	15-40	ASTM	A105
CAPT	Cap	Threaded Inside	DN	15-40	ASTM	A105

* REDUCING FITTINGS

BROS	Branch Outlet Socket-Weld. End	DN	15-40	ASTM	A105
BROB	Branch Outlet Butt-Weld. End	DN	50-600	ASTM	A105
RECB	Reducer Conc. Butt-Weld. End	DN	20-600	ASTM	A234-WPB
REEB	Reducer Ecc. Butt-Weld. End	DN	20-600	ASTM	A234-WPB
TERB	Tee Reducing Butt-Weld. End	DN	20-600	ASTM	A234-WPB
TERS	Tee Reducing Socket-Weld. End	DN	20-40	ASTM	A105

* VALVES

CHVF	Check Valve Flanged	DN	15-40	Body:	ASTM	A216-WCB/WCC, A105
				Trim:	AISI	316 (L) + Stellite 6, 410
		DN	50-600	Body:	ASTM	A216-WCB/WCC, A105
				Trim:	AISI	410
CHVS	Check Valve Socket	DN	15-40	Body:	ASTM	A216-WCB/WCC, A105
				Trim:	AISI	316 (L) + Stellite 6, 410
GAVF	Gate Valve Flanged	DN	15-40	Body:	ASTM	A216-WCB/WCC, A105
				Trim:	AISI	316 (L) + Stellite 6, 410
		DN	50-600	Body:	ASTM	A216-WCB/WCC, A105
				Trim:	AISI	410
GAVS	Gate Valve Sw	DN	15-40	Body:	ASTM	A216-WCB/WCC, A105
				Trim:	AISI	316 (L) + Stellite 6, 410
GLVF	Globe Valve Flanged	DN	15-40	Body:	ASTM	A216-WCB/WCC, A105
				Trim:	AISI	316 (L) + Stellite 6, 410
		DN	50-200	Body:	ASTM	A216-WCB/WCC, A105
				Trim:	AISI	410
GLVS	Globe Valve Socket	DN	15-40	Body:	ASTM	A216-WCB/WCC, A105
				Trim:	AISI	316 (L) + Stellite 6, 410

* MISCELLANEOUS

GKTI	Gasket, C.A.F	DN	15-600	C.A.F		
ORFS	Orifice Flange Set	DN	50-600		ASTM	A105
STBT	Stud Bolt with Nuts		---	Studs:	ASTM	A193-B7
				Nuts:	ASTM	A194-2H

Notes:

- For full material description see relevant MESC buying description.
- Where both API 5L and ASTM A106 pipes are specified, preference is subject to company approval.
- Where both butt-weld end and socket weld end Fitings are specified, preference is subject to company approval.

Class No.: AN02	Page: 3	Content: Piping Components

ITEM DESCRIPTION			NOMINAL PIPE SIZE 15	20	25	40	50	80	100	150	200	250	300	350	400	450	500	600	
* PIPE																			
Pipe	API-5L GR.B SML	74.13.21/23	*	*	*	*	*	*	*										
	API-5L GR.B EW	74.13.23								*	*	*	*	*	*	*	*		
	API-5L GR.B SAW	74.13.23																*	
	A-106 GR.B	74.30.21/31	*	*	*	*	*	*	*	*	*	*	*	*	*	*	*	*	
Pipe nipple (50 mm) ASTM A 106 B		76.05.56	*	*	*	*													
* FLANGES																			
Blind Flange		76.62.10	*	*	*	*	*	*	*	*	*	*	*	*	*	*	*	*	
Spectacle Blind Flange		76.88.06	*	*	*	*	*	*	*	*	*	*	*	*	*	*	*	*	
Spacer Ring Type (ANS Flanges)		76.88.16	*	*	*	*	*	*	*	*	*	*	*	*	*	*	*	*	
Welding Neck Flange		76.62.79	*	*	*	*	*	*	*	*	*	*	*	*	*	*	*	*	
* FITTINGS																			
Cap	Butt-Weld. End	76.30.18	*	*	*	*	*	*	*	*	*	*	*	*	*	*	*	*	
Elbow 45 Deg.	Butt-Weld. End	76.30.38	*	*	*	*	*	*	*	*	*	*	*	*	*	*	*	*	
Elbow 90 Deg.	Butt-Weld. End	76.30.39/40	*	*	*	*	*	*	*	*	*	*	*	*	*	*	*	*	
Equal Tee	Butt-Weld. End	76.30.84	*	*	*	*	*	*	*	*	*	*	*	*	*	*	*	*	
Elbow 45 Deg.	Socket-Weld. End	76.34.38	*	*	*	*													
Elbow 90 Deg.	Socket-Weld. End	76.34.39	*	*	*	*													
Equal Tee	Socket-Weld. End	76.34.84	*	*	*	*													
Coupling	Socket-Weld. End	76.34.28	*	*	*	*													
Cap	Socket-Weld. End	76.34.18		*	*	*	*												
* VALVES																			
Ball Valve Red. Bore Flanged		75.37.02	*	*	*	*	*	*	*	*	*	*							
Check Valve Flanged		75.37.12	*	*	*	*													
Check Valve Socket		75.56.13	*	*	*	*													
Gate Valve Flanged		75.37.32								*	*	*	*	*	*	*	*	*	
Globe Valve Flanged		75.37.42	*	*	*	*													
Globe Valve Socket		75.56.45	*	*	*	*													
* MISCELLANEOUS																			
Gasket, RF. C.A.F		85.31.15/17		*	*	*	*	*	*	*	*	*	*	*	*	*	*	*	*
Orifice Flange Set		76.83.00						*	*	*	*	*	*	*	*	*	*	*	*

Class No.:	AN02	Page:	4	Content:	Reducing Piping Components

Run		Br.	BROB 76.80.05	RECB 76.30.72	REEB 76.30.73	TERB 76.30.85	TERS 76.34.85
20	×	15		*	*	*	*
25	×	15		*	*	*	*
25	×	20		*	*	*	*
40	×	15		*	*	*	*
40	×	20		*	*	*	*
40	×	25		*	*	*	*
50	×	20		*	*		*
50	×	25		*	*		
50	×	40		*	*	*	
80	×	40		*	*		
80	×	50	*	*	*	*	
100	×	40		*	*		
100	×	50	*	*	*	*	
100	×	80	*	*	*	*	
150	×	50	*				
150	×	80	*	*	*	*	
150	×	100	*	*	*	*	
200	×	50	*				
200	×	80	*				
200	×	100		*	*	*	
200	×	150		*	*	*	
250	×	50	*				
250	×	80	*				
250	×	100	*	*	*	*	
250	×	150		*	*	*	
250	×	200		*	*	*	
300	×	50	*				
300	×	80	*				
300	×	100	*				
300	×	150		*	*	*	
300	×	200		*	*	*	
300	×	250		*	*	*	
350	×	50	*				
350	×	80	*				
350	×	100	*				
350	×	150		*	*	*	
350	×	200		*	*	*	
350	×	250		*	*	*	
350	×	300		*	*	*	

Run		Br.	BROB 76.80.05	RECB 76.30.72	REEB 76.30.73	TERB 76.30.85
400	×	50	*			
400	×	80	*			
400	×	100	*			
400	×	150	*	*	*	*
400	×	200		*	*	*
400	×	250		*	*	*
400	×	300		*	*	*
400	×	350		*	*	*
450	×	50	*			
450	×	80	*			
450	×	100	*			
450	×	150	*			
450	×	200		*	*	*
450	×	250		*	*	*
450	×	300		*	*	*
450	×	350		*	*	*
450	×	400		*	*	*
500	×	50	*			
500	×	80	*			
500	×	100	*			
500	×	150	*			
500	×	200	*	*	*	*
500	×	250		*	*	*
500	×	300		*	*	*
500	×	350		*	*	*
500	×	400		*	*	*
500	×	450	*	*	*	*
600	×	50	*			
600	×	80	*			
600	×	100	*			
600	×	150	*			
600	×	200	*			
600	×	250	*	*	*	*
600	×	300		*	*	*
600	×	350		*	**	
600	×	400		*	*	*
600	×	450	*	*	*	*
600	×	500	*	*	*	*

COMP. NAME	DESCRIPTION
BROS	Branch Outlet Socket-Weld. End
BROB	Branch Outlet Butt-Weld. End
RECB	Reducer Conc. Butt-Weld. End
REEB	Reducer Ecc. Butt-Weld. End
TERB	Tee Reducing Butt-Weld. End
TERS	Tee Reducing Socket-Weld. End

RUN	Br.	BROS 76.80.28
40-150	15	*
200-600		*
50-80	20	*
100-600		*
50	25	*
80-100		*
150-600		*
80-100	40	*
150-300		*
35-600		*

Class No.:	AN02	Page:	5	Content:	Bolting and Assemblies

DN	No.	Inch		mm	81.38.61
15	4	1/2	×	60	*
20	4	1/2	×	70	*
25	4	1/2	×	70	*
40	4	1/2	×	80	*
50	4	5/8	×	80	*
80	4	5/8	×	100	*
100	8	5/8	×	100	*
150	8	3/4	×	100	*
200	8	3/4	×	110	*
250	12	7/8	×	120	*
300	12	7/8	×	120	*
350	12	1	×	130	*
400	16	1	×	140	*
450	16	1-1/8	×	150	*
500	20	1-1/8	×	160	*
600	20	1-1/4	×	180	*

DN	No.	Inch		mm	81.38.61
15	4	5/8	×	120	*
20	4	5/8	×	120	*
25	4	5/8	×	120	*
40	4	3/4	×	130	*
50	8	5/8	×	150	*
80	8	3/4	×	150	*
100	12	3/4	×	140	*
150	12	3/4	×	140	*
200	12	7/8	×	150	*
250	16	1	×	170	*
300	16	1-1/8	×	190	*
350	20	1-1/8	×	195	*
400	20	1-1/4	×	210	*
450	24	1-1/4	×	220	*
500	24	1-1/4	×	230	*
600	24	1-1/2	×	260	*

BOLT SET SPECTACLE/SPACER

DN	No.	Inch		mm	81.38.61
15	4	1/2	×	70	*
20	4	1/2	×	70	*
25	4	1/2	×	80	*
40	4	1/2	×	80	*
50	4	5/8	×	90	*
80	4	5/8	×	110	*
100	8	5/8	×	110	*
150	8	3/4	×	120	*
200	8	3/4	×	130	*
250	12	7/8	×	140	*
300	12	7/8	×	150	*
350	12	1	×	160	*
400	16	1	×	170	*
450	16	1-1/8	×	180	*
500	20	1-1/8	×	195	*
600	20	1-1/4	×	220	*

DRAIN POINT Fig. 2I

Run	DN 15-25	Br	DN 15
Run	DN 40	Br	DN 20

	No.
Branch: Table Page 1	1
Ball Valve Red. Bore Flanged	1
Blind Flange	1
Gasket RF. Tanged Insert	2
Stud Bolt with Nuts	8
Welding Neck Flange	1

* DRAIN POINT Fig. 2J

Run	DN 50-600	Br	DN 20

	No.
Branch: Table Page 1	1
Ball Valve Red. Bore Flanged	1
Blind Flange	1
Gasket RF. Tanged Insert	2
Pipe Nipple 50 mm	1
Stud Bolt with Nuts	8
Welding Neck Flange	1

* VENT POINT Fig. 1I

Run	DN 15-25	Br	DN 15
Run	DN 40	Br	DN 20

	No.
Branch: Table Page 1	1
Blind Flange	1
Gasket RF. Tanged Insert	2
Globe Valve Flanged	1
Stud Bolt with Nuts	8
Welding Neck Flange	1

* VENT POINT Fig. 1J

Run	DN 50-600	Br	DN 20

	NO
Branch: Table Page 1	1
Blind Flange	1
Gasket RF. Tanged Insert	2
Globe Valve Flanged	1
Pipe Nipple 50 mm	1
Stud Bolt with Nuts	8
Welding Neck Flange	1

Class No.: AN04	Page: 1	Content: General
Base Material: Carbon Stee	First Issue: Revision:	

Rating: PN 20 (Class 150)	Date:	
Corrosion Allowance: 1 mm	Sign:	

Temperature °C		0	50	100	150	200	250	300	350	400
Pressure Barg	DN 15-600	19.6	19.2	17.6	15.8	13.9	12.0	10.2	8.3	6.5

TABLE OF SCHEDULES

DN	Schedule
15	80
20	80
25	80
40	80
50	40
80	40
100	40
150	40
200	20
250	20
300	20
350	20
400	20
450	20
500	20
600	20

BRANCH CONNECTIONS 90 DEGREES
BRANCH SIZE

Run Size	15	20	25	40	50	80	100	150	200	250	300	350	400	450	500	600
600	C	C	C	C	E	E	E	E	E	E	E	E	E	E	E	A
500	C	C	C	C	D	D	D	D	D	D	D	D	D	D	A	
450	C	C	C	C	E	D	D	D	E	E	E	E	E	A		
400	C	C	C	C	D	D	D	D	D	D	D	D	A			
350	C	C	C	C	D	D	D	D	D	D	D	A				
300	C	C	C	C	D	D	D	D	D	D	A					
250	C	C	C	C	D	D	D	D	D	A						
200	C	C	C	C	D	D	D	D	A							
150	C	C	C	C	D	D	D	A								
100	C	C	C	C	D	D	A									
80	C	C	C	C	D	A										
50	C	C	C	B	A											
40	C	B	B	A												
25	B	B	A													
20	B	A														
15	A															

Notes:
- Design limits are acc. flange rating ANSI B16.5.
- For connection class 300, use equivalent class 300 for flange, bolting and gasket selection
- Piston type check valves for horizontal mounting only.
- Application of other types of branch is subject to prior approval of company

CODE	EXPLANATION OF CHARACTERS
A	Equal tee
B	Reducing tee
C	Branch outlet socket-weld. End
D	Pipe to pipe
E	Branch outlet butt-weld. end

* PIPE

PIPE	Pipe	DN	15-600	ASTM	A 106 B
PNPP	Pipe Nipple 50 mm	DN	15-40	ASTM	A 106 B

* FLANGES

BLFL	Blind Flange	DN	15-600	ASTM	A105
SBFL	Spectacle Blind Flange	DN	15-600	ASTM	A516-60
SPRT	Spacer Ring Type (ANS Flanges)	DN	15-600	ASTM	A516-60
WNFL	Welding Neck Flange	DN	15-600	ASTM	A105

* FITTINGS

CAPB	Cap	Butt-Weld. End	DN	15-600	ASTM	A234-WPB
E45B	Elbow 45 Deg.	Butt-Weld. End	DN	15-600	ASTM	A234-WPB
E90B	Elbow 90 Deg.	Butt-Weld. End	DN	15-600	ASTM	A234-WPB
TEEB	Equal Tee	Butt-Weld. End	DN	15-600	ASTM	A234-WPB
E45S	Elbow 45 Deg.	Socket-Weld. End	DN	15-40	ASTM	A105
E90S	Elbow 90 Deg.	Socket-Weld. End	DN	15-40	ASTM	A105
TEES	Equal Tee	Socket-Weld. End	DN	15-40	ASTM	A105
COUS	Coupling	Socket-Weld. End	DN	15-40	ASTM	A105
CAPS	Cap	Socket-Weld. End	DN	15-40	ASTM	A105

* REDUCING FITTINGS

BROS	Branch Outlet Socket-Weld. End	DN	15-40	ASTM	A105
BROB	Branch Outlet Butt-Weld. End	DN	50-600	ASTM	A105
RECB	Reducer Conc. Butt-Weld. End	DN	20-600	ASTM	A234-WPB
REEB	Reducer Ecc. Butt-Weld. End	DN	20-600	ASTM	A234-WPB
TERB	Tee Reducing Butt-Weld. End	DN	20-600	ASTM	A234-WPB
TERS	Tee Reducing Socket-Weld. End	DN	20-40	ASTM	A105

* VALVES

CHVF	Check Valve Flanged	DN	15-600	Body:	ASTM	A216-WCB/WCC, A105
				Trim:	AISI	316 (L) + Stellite 6
GAVF	Gate Valve Flanged	DN	15-600	Body:	ASTM	A216-WCB/WCC, A105
				Trim:	AISI	316 (L) + Stellite 6
GLVF	Globe Valve Flanged	DN	15-200	Body:	ASTM	A216-WCB/WCC, A105
				Trim:	AISI	316 (L) + Stellite 6

* MISCELLANEOUS

GKTI	Gasket, C.A.F	DN	15-600	C.A.F		
ORFS	Orifice Flange Set	DN	50-600		ASTM	A105
STBT	Stud Bolt with Nuts		---	Studs:	ASTM	A193-B7
				Nuts:	ASTM	A194-2H

Note:
- For full material description see relevant MESC buying description.
- Where both butt-weld end and socket weld end Fitings are specified, preference is subject to company approval.

ITEM DESCRIPTION			NOMINAL PIPE SIZE 15	20	25	40	50	80	100	150	200	250	300	350	400	450	500	600
* PIPE																		
Pipe		74.30.21/31	*	*	*	*	*	*	*	*	*	*	*	*	*	*	*	*
Pipe nipple (50 mm)		76.05.00	*	*	*	*												
* FLANGES																		
Blind Flange		76.62.10	*	*	*	*	*	*	*	*	*	*	*	*	*	*	*	*
Spectacle Blind Flange		76.88.06	*	*	*	*	*	*	*	*	*	*	*	*	*	*	*	*
Spacer Ring Type (ANS Flanges)		76.88.16	*	*	*	*	*	*	*	*	*	*	*	*	*	*	*	*
Welding Neck Flange		76.62.79	*	*	*	*	*	*	*	*	*	*	*	*	*	*	*	*
* FITTINGS																		
Cap	Butt-Weld. End	76.30.18	*	*	*	*	*	*	*	*	*	*	*	*	*	*	*	*
Elbow 45 Deg.	Butt-Weld. End	76.30.38	*	*	*	*	*	*	*	*	*	*	*	*	*	*	*	*
Elbow 90 Deg.	Butt-Weld. End	76.30.39/40	*	*	*	*	*	*	*	*	*	*	*	*	*	*	*	*
Equal Tee	Butt-Weld. End	76.30.84	*	*	*	*	*	*	*	*	*	*	*	*	*	*	*	*
Elbow 45 Deg.	Socket-Weld. End	76.34.38	*	*	*	*												
Elbow 90 Deg.	Socket-Weld. End	76.34.39	*	*	*	*												
Equal Tee	Socket-Weld. End	76.34.84	*	*	*	*												
Coupling	Socket-Weld. End	76.34.28	*	*	*	*												
Cap	Socket-Weld. End	76.34.18	*	*	*	*												
* VALVES																		
Check Valve Flanged		75.42.13	*	*	*	*	*	*	*	*	*	*	*	*	*	*	*	*
Gate Valve Flanged		75.42.32	*	*	*	*	*	*	*	*	*	*	*	*	*	*	*	*
Globe Valve Flanged		75.42.40	*	*	*	*	*	*	*	*	*							
* MISCELLANEOUS																		
Gasket, RF. C.A.F		85.31.15/17	*	*	*	*	*	*	*	*	*	*	*	*	*	*	*	*
Orifice Flange Set		76.83.00					*	*	*	*	*	*	*	*	*	*	*	*

Class No.: AN04	Page: 4	Content: Reducing Piping Components

TERS Run	Br.	BROB 76.80.05	RECB 76.30.72	REEB 76.30.73	TERB 76.30.85	76.34.85
20 ×	15		*	*	*	*
25 ×	15		*	*	*	*
25 ×	20		*	*	*	*
40 ×	15		*	*	*	*
40 ×	20		*	*	*	*
40 ×	25		*	*	*	*
50 ×	20		*	*		*
50 ×	25		*	*		
50 ×	40		*	*	*	
80 ×	40		*	*		
80 ×	50	*	*	*	*	
100 ×	40		*	*		
100 ×	50	*	*	*	*	
100 ×	80	*	*	*	*	
150 ×	50	*				
150 ×	80	*	*	*	*	
150 ×	100	*	*	*	*	
200 ×	50	*				
200 ×	80	*				
200 ×	100		*	*	*	
200 ×	150		*	*	*	
250 ×	50	*				
250 ×	80	*				
250 ×	100	*	*	*	*	
250 ×	150		*	*	*	
250 ×	200		*	*	*	
300 ×	50	*				
300 ×	80	*				
300 ×	100	*				
300 ×	150		*	*	*	
300 ×	200		*	*	*	
300 ×	250		*	*	*	
350 ×	50	*				
350 ×	80	*				
350 ×	100	*				
350 ×	150		*	*	*	
350 ×	200		*	*	*	
350 ×	250		*	*	*	
350 ×	300		*	*	*	

Run	Br.	BROB 76.80.05	RECB 76.30.72	REEB 76.30.73	TERB 76.30.85
400 ×	50	*			
400 ×	80	*			
400 ×	100	*			
400 ×	150	*	*	*	*
400 ×	200		*	*	*
400 ×	250		*	*	*
400 ×	300		*	*	*
400 ×	350		*	*	*
450 ×	50	*			
450 ×	80	*			
450 ×	100	*			
450 ×	150	*			
450 ×	200	*	*	*	*
450 ×	250		*	*	*
450 ×	300		*	*	*
450 ×	350		*	*	*
450 ×	400		*	*	*
500 ×	50	*			
500 ×	80	*			
500 ×	100	*			
500 ×	150	*			
500 ×	200	*	*	*	*
500 ×	250		*	*	*
500 ×	300		*	*	*
500 ×	350		*	*	*
500 ×	400		*	*	*
500 ×	450	*	*	*	*
600 ×	50	*			
600 ×	80	*			
600 ×	100	*			
600 ×	150	*			
600 ×	200	*			
600 ×	250	*	*	*	*
600 ×	300		*	*	*
600 ×	350		*	*	*
600 ×	400		*	*	*
600 ×	450	*	*	*	*
600 ×	500	*	*	*	*

COMP. NAME	DESCRIPTION
BROS	Branch Outlet Socket-Weld. End
BROB	Branch Outlet Butt-Weld. End
RECB	Reducer Conc. Butt-Weld. End
REEB	Reducer Ecc. Butt-Weld. End
TERB	Tee Reducing Butt-Weld. End
TERS	Tee Reducing Socket-Weld. End

RUN	Br.	BROS 76.80.2
40-150	15	*
200-600		*
50-80	20	*
100-600		*
50	25	*
80-100		*
150-600		*
80-100	40	*
150-300		*
350-600		*

DN	No.	Inch		mm	81.38.61
15	4	1/2	×	60	*
20	4	1/2	×	70	*
25	4	1/2	×	70	*
40	4	1/2	×	80	*
50	4	5/8	×	80	*
80	4	5/8	×	100	*
100	8	5/8	×	100	*
150	8	3/4	×	100	*
200	8	3/4	×	110	*
250	12	7/8	×	120	*
300	12	7/8	×	120	*
350	12	1	×	130	*
400	16	1	×	140	*
450	16	1-1/8	×	150	*
500	20	1-1/8	×	160	*
600	20	1-1/4	×	180	*

DN	No.	Inch		mm	81.38.61
15	4	5/8	×	120	*
20	4	5/8	×	120	*
25	4	5/8	×	120	*
40	4	3/4	×	130	*
50	8	5/8	×	150	*
80	8	3/4	×	150	*
100	12	3/4	×	140	*
150	12	3/4	×	140	*
200	12	7/8	×	150	*
250	16	1	×	170	*
300	16	1-1/8	×	190	*
350	20	1-1/8	×	195	*
400	20	1-1/4	×	210	*
450	24	1-1/4	×	220	*
500	24	1-1/4	×	230	*
600	24	1-1/2	×	260	*

BOLT SET SPECTACLE/SPACER

DN	No.	Inch		mm	81.38.61
15	4	1/2	×	70	*
20	4	1/2	×	70	*
25	4	1/2	×	80	*
40	4	1/2	×	80	*
50	4	5/8	×	90	*
80	4	5/8	×	110	*
100	8	5/8	×	110	*
150	8	3/4	×	120	*
200	8	3/4	×	130	*
250	12	7/8	×	140	*
300	12	7/8	×	150	*
350	12	1	×	160	*
400	16	1	×	170	*
450	16	1-1/8	×	180	*
500	20	1-1/8	×	195	*
600	20	1-1/4	×	220	*

DRAIN POINT Fig. 0I

Run	DN 15-25	Br	DN 15	
Run	DN 40	Br	DN 20	
				No.
Branch: Table Page 1				1
Blind Flange				1
Gasket CAF. Oil Resistance				2
Gate Valve Flanged				1
Stud Bolt with Nuts				8
Welding Neck Flange				1

* DRAIN POINT Fig. 0J

Run	DN 50-600	Br	DN 20	NO.
Branch: Table Page 1				1
Blind Flange				1
Gasket CAF. Oil Resistance				2
Gate Valve Flanged				1
Pipe Nipple 50 mm				1
Stud Bolt with Nuts				8
Welding Neck Flange				1

* VENT POINT Fig. 1I

Run	DN 15-25	Br	DN 15	
Run	DN 40	Br	DN 20	NO
Branch: Table Page 1				1
Blind Flange				1
Gasket CAF. Oil Resistance				2
Globe Valve Flanged				1
Stud Bolt with Nuts				8
Welding Neck Flange				1

* VENT POINT Fig. 1J

Run	DN 50-600	Br	DN 20	NO
Branch: Table Page 1				1
Blind Flange				1
Gasket CAF. Oil Resistance				2
Globe Valve Flanged				1
Pipe Nipple 50 mm				1
Stud Bolt with Nuts				8
Welding Neck Flange				1

Rating: PN 20 (Class 150)	Date:	
Corrosion Allowance: 3 mm	Sign:	

Temperature °C		0	50	65
Pressure Barg	DN 25-300	19.6	19.2	18.8

TABLE OF SCHEDULES

DN	Schedule
15	160
20	160
25	160
40	160
50	80
80	80
100	80
150	80
200	40
250	40
300	40

BRANCH CONNECTIONS 90 DEGREES
BRANCH SIZE

Run	Size	25	40	50	80	100	150	200	250	300
300	C	C	X	X	X	X	X	X	X	
250	C	C	X	X	X	X	X	X		
200	C	C	X	X	X	X	X			
150	C	C	X	X	X	X				
100	C	C	X	X	X					
80	C	C	X	X						
50	C	B	A							
40	B	A								
25	A									

Notes:

Design limits are acc. flange rating ANSI B16.5 Material Group 1.1
- This piping class is orginally designed for acid service.
- Standard long radius elbows DN80 and larger shall be used for sweep-in connections
- DN 15-20 piping components only to be used for short branches e.g. pressure points.
- Application of other types of branch connections shall be subject to prior approval of owner.
- For connections class 300, use equivalent class 300 for flange, bolting and gasket selection.

CODE	EXPLANATION OF CHARACTERS
A	Equal tee
B	Reducing tee
C	Branch fitting socket-weld. End
X	Pipe to pipe connection to be made by sweep-in or lateral branch

* PIPE

PIPE	Pipe	DN	25-300	ASTM	A106-B

* FLANGES

BLFL	Blind Flange	DN	25-300	ASTM	A105
WNFL	Welding Neck Flange	DN	25-300	ASTM	A105

* FITTINGS

E45B	Elbow 45 Deg.	Butt-Weld. End	DN	25-300	ASTM	A234-WPB
E90B	Elbow 90 Deg.	Butt-Weld. End	DN	25-300	ASTM	A234-WPB
TEEB	Equal Tee	Butt-Weld. End	DN	25-300	ASTM	A234-WPB
E45S	Elbow 45 Deg.	Socket-Weld. End	DN	25-40	ASTM	A105
E90S	Elbow 90 Deg.	Socket-Weld. End	DN	25-40	ASTM	A105
TEES	Equal Tee	Socket-Weld. End	DN	25-40	ASTM	A105
COUS	Coupling	Socket-Weld. End	DN	25-40	ASTM	A105
CAPS	Cap	Socket-Weld. End	DN	25-40	ASTM	A105

* REDUCING FITTINGS

BROS	Branch Fitting Socket-Weld Outlet	DN	25-40	ASTM	A105
BNIP	Branch Fitting Plain-End Outlet	DN	15-50	ASTM	A105
RECB	Reducer Conc. Butt-Weld. End	DN	20-300	ASTM	A234-WPB
REEB	Reducer Ecc. Butt-Weld. End	DN	20-300	ASTM	A234-WPB
TERS	Tee Reducing Socket-Weld. End	DN	20-40	ASTM	A105

* VALVES

BAFF	Ball Valve Full Bore Flanged	DN	25-300	Body:	ASTM	A216-WCB/WCC, A105
				nt.:	Alloy 20/PTFE	
CHVF	Check Valve Flanged	DN	25-300	Body:	ASTM	A216-WCB/WCC, A105
				Trim:	Alloy 20	
GLVF	Globe Valve Flanged	DN	25-200	Body:	ASTM	A216-WCB/WCC, A105
				Trim:	Alloy 20	

* MISCELLANEOUS

GKRF	Gasket, Raised Face	DN	25-300	PTFE Reinf. with Mineral Filler		
STBT	Stud Bolt with Nuts		---	Studs:	ASTM	A193-B7
				Nuts:	ASTM	A194-2H

Note:
- For full material description see relevant MESC buying description.
- Where both socket weld and butt weld fittings are specified, preference is subject to company approval.

ITEM DESCRIPTION		15	20	25	40	50	80	100	150	200	250	300
* PIPE												
Pipe ASTM A106 B	74.30.21/31	*	*	*	*	*	*	*	*	*	*	*
* FLANGES												
Blind Flange	76.62.10	*	*	*	*	*	*	*	*	*	*	*
Welding Neck Flange	76.62.79	*	*	*	*	*	*	*	*	*	*	*
* FITTINGS												
Elbow 45 Deg. Butt-Weld. End	76.30.38	*	*	*	*	*	*	*	*	*	*	*
Elbow 90 Deg. Butt-Weld. End	76.30.39/40	*	*	*	*	*	*	*	*	*	*	*
Equal Tee Butt-Weld. End	76.30.84	*	*	*	*	*	*	*	*	*	*	*
Elbow 45 Deg. Socket-Weld. End	76.34.38	*	*	*	*							
Elbow 90 Deg. ocket-Weld. End	76.34.39	*	*	*	*							
Equal Tee Socket-Weld. End	76.34.84	*	*	*	*							
Coupling Socket-Weld. End	76.34.28	*	*	*	*							
Cap Socket-Weld. End	76.34.18	*	*	*	*							
* VALVES												
Ball Valve Full Bore Flanged	77.37.02	*	*	*	*	*	*	*	*	*		
Check Valve Flanged	75.37.12			*	*	*	*	*	*	*	*	*
Globe Valve Flanged	75.37.42	*	*	*	*	*	*	*	*	*		
* MISCELLANEOUS												
Gasket, Raised Face	85.31.15/17	*	*	*	*	*	*	*	*	*	*	*

		Components

Run		RECB Br.	REEB 76.30.72	TERS 76.30.73	TERB 76.34.85	76.30.85
20	×	15	*	*	*	*
25	×	20	*	*	*	*
40	×	25	*	*	*	*
50	×	40	*	*		*
80	×	50	*	*		
100	×	80	*	*		
150	×	100	*	*		
200	×	150	*	*		
250	×	200	*	*		
300	×	250	*	*		

COMP. NAME	DESCRIPTION
RECB	Reducer Conc. Butt-Weld. End
REEB	Reducer Ecc. Butt-Weld. End
TERS	Tee Reducing Socket-Weld. End
TERB	Tee Reducing Butt-Weld. End
BROS	Branch Outlet Socket-Weld. End

RUN	Br.	BROS 76.80.26
50	25	*
80-100		*
150-300		*
80-100	40	*
150-300		*

BOLT SET FLANGED JOINTS

DN	No.	Inch		mm	81.38.61
15	4	1/2	×	60	*
20	4	1/2	×	70	*
25	4	1/2	×	70	*
40	4	1/2	×	80	*
50	4	5/8	×	80	*
80	4	5/8	×	100	*
100	8	5/8	×	100	*
150	8	3/4	×	100	*
200	8	3/4	×	110	*
250	12	7/8	×	120	*
300	12	7/8	×	120	*

BOLT SET SPECTACLE/SPACER

DN	No.	Inch		mm	81.38.61
15	4	1/2	×	70	*
20	4	1/2	×	70	*
25	4	1/2	×	80	*
40	4	1/2	×	80	*
50	4	5/8	×	90	*
80	4	5/8	×	110	*
100	8	5/8	×	110	*
150	8	3/4	×	120	*
200	8	3/4	×	130	*
250	12	7/8	×	140	*
300	12	7/8	×	150	*

Rating: PN 20 (Class 150)	Date:	
Corrosion Allowance: 1 mm	Sign:	

Temperature °C		0	50	75	100	125	150	175	200
Pressure Barg	DN 15-80	19.6	19.2	18.4	17.6	16.7	15.8	14.8	11.0
	DN 100-150	19.6	19.2	18.4	17.6	16.7	15.8	14.8	9.0
	DN 200-600	19.6	19.2	18.4	17.6	16.7	15.8	12.0	7.0

TABLE OF SCHEDULES

DN	Schedule
15	80
20	80
25	80
40	80
50	40
80	40
100	40
150	40
200	20
250	20
300	20
350	20
400	20
450	20
500	20
600	20

BRANCH CONNECTIONS 90 DEGREES

Run Size	BRANCH SIZE 15	20	25	40	50	80	100	150	200	250	300	350	400	450	500	600
600	C	C	C	C	E	E	E	E	E	E	E	E	E	E	E	A
500	C	C	C	C	D	D	D	D	D	D	D	D	D	D	A	
450	C	C	C	C	E	D	D	D	E	E	E	E	E	A		
400	C	C	C	C	D	D	D	D	D	D	D	D	A			
350	C	C	C	C	D	D	D	D	D	D	D	A				
300	C	C	C	C	D	D	D	D	D	D	A					
250	C	C	C	C	D	D	D	D	D	A						
200	C	C	C	C	D	D	D	D	A							
150	C	C	C	C	D	D	D	A								
100	C	C	C	C	D	D	A									
80	C	C	C	C	D	A										
50	C	C	C	B	A											
40	C	B	B	A												
25	B	B	A													
20	B	A														
15	A															

Notes:

Design limits are acc. flange rating ANSI B16.5 Material Group 1.1 and ball valve rating acc. BS 5351.
- Piston type check valves for horizontal mounting only
- Cold bending is not allowed.
- Application of other types of branch connections shall be subject to prior approval of company.
-For connections class 300, use equivalent class 300 for flange, bolting and gasket selection.

CODE	EXPLANATION OF CHARACTERS
A	Equal tee
B	Reducing tee
C	Branch outlet socket-weld. End
D	Pipe to pipe
E	Branch outlet reducing butt-weld

* PIPE

PIPE	Pipe	DN	15-600	ASTM	A106-B
PNPP	Pipe Nipple 50 mm	DN	15-40	ASTM	A106-B

* FLANGES

BLFL	Blind Flange	DN	15-600	ASTM	A105
SBFL	Spectacle Blind Flange	DN	15-600	ASTM	A516-60
SPRT	Spacer Ring Type (ANS Flanges)	DN	15-600	ASTM	A516-60
WNFL	Welding Neck Flange	DN	15-600	ASTM	A105

* FITTINGS

CAPB	Cap	Butt-Weld. End	DN	15-600	ASTM	A234-WPB
E45B	Elbow 45 Deg.	Butt-Weld. End	DN	15-600	ASTM	A234-WPB
E90B	Elbow 90 Deg.	Butt-Weld. End	DN	15-600	ASTM	A234-WPB
TEEB	Equal Tee	Butt-Weld. End	DN	15-600	ASTM	A234-WPB
E45S	Elbow 45 Deg.	Socket-Weld. End	DN	15-40	ASTM	A105
E90S	Elbow 90 Deg.	Socket-Weld. End	DN	15-40	ASTM	A105
TEES	Equal Tee	Socket-Weld. End	DN	15-40	ASTM	A105
COUS	Coupling	Socket-Weld. End	DN	15-40	ASTM	A105
CAPS	Cap	Socket-Weld. End	DN	15-40	ASTM	A105

* REDUCING FITTINGS

BROS	Branch Fitting Outlet Socket-Weld. End	DN	15-40	ASTM	A105
BROB	Branch Outlet Red. Butt-Weld .	DN	50-600	ASTM	A105
RECB	Reducer Conc. Butt-Weld. End	DN	20-600	ASTM	A234-WPB
REEB	Reducer Ecc. Butt-Weld. End	DN	20-600	ASTM	A234-WPB
TERB	Tee Reducing Butt-Weld. End	DN	20-600	ASTM	A234-WPB
TERS	Tee Reducing Socket-Weld. End	DN	20-40	ASTM	A105

* VALVES

BARF	Ball Valve Red. Bore Flanged	DN	15-250	Body:	ASTM	A216-WCB/WCC, A105
				Int.:	AISI 316 (L) / PTFE	
CHVB	Check Valve Butt-Weld. End	DN	15-40	Body:	ASTM	A216-WCB/WCC, A105
				Trim:	AISI	316 (L)
CHVF	Check Valve Flanged	DN	15-600	Body:	ASTM	A216-WCB/WCC, A105
				Trim:	AISI	316 (L) + Stellite 6
GAVF	Gate Valve Flanged	DN	150-600	Body:	ASTM	A216-WCB/WCC, A105
				Trim:	AISI	316 (L) + Stellite 6
GLVB	Globe Valve Butt-Weld. End	DN	15-40	Body:	ASTM	A216-WCB/WCC, A105
				Trim:	AISI	316 (L) + Stellite 6
GLVF	Globe Valve Flanged	DN	15-200	Body:	ASTM	A216-WCB/WCC, A105
				Trim:	AISI	316 (L) + Stellite 6

* MISCELLANEOUS

GKTI	Gasket, RF.	DN	15-600	C.A.F		
ORFS	Orifice Flange Set	DN	50-600		ASTM	A105
STBT	Stud Bolt with Nuts		---	Studs:	ASTM	A193-B7M
				Nuts:	ASTM	A194-2HM

Note:
- For full material description see relevant MESC buying description.
- Where both socket weld and butt weld fittings are specified, preference is subject to company approval.

ITEM DESCRIPTION			15	20	25	40	50	80	100	150	200	250	300	350	400	450	500	600
* PIPE																		
Pipe	ASTM A106 B	74.30.21/31	*	*	*	*	*	*	*	*	*	*	*	*	*	*	*	*
Pipe nipple (50 mm)		76.05.56	*	*	*	*												
* FLANGES																		
Blind Flange		76.62.10	*	*	*	*	*	*	*	*	*	*	*	*	*	*	*	*
Spectacle Blind Flange		76.88.06	*	*	*	*	*	*	*	*	*	*	*	*	*	*	*	*
Welding Neck Flange		76.62.79	*	*	*	*	*	*	*	*	*	*	*	*	*	*	*	*
* FITTINGS																		
Cap	Butt-Weld. End	76.30.18	*	*	*	*	*	*	*	*	*	*	*	*	*	*	*	*
Elbow 45 Deg.	Butt-Weld. End	76.30.38	*	*	*	*	*	*	*	*	*	*	*	*	*	*	*	*
Elbow 90 Deg.	Butt-Weld. End	76.30.39/40	*	*	*	*	*	*	*	*	*	*	*	*	*	*	*	*
Equal Tee	Butt-Weld. End	76.30.84	*	*	*	*	*	*	*	*	*	*	*	*	*	*	*	*
Elbow 45 Deg.	Socket-Weld. End	76.34.38	*	*	*	*												
Elbow 90 Deg.	Socket-Weld. End	76.34.39	*	*	*	*												
Equal Tee	Socket-Weld. End	76.34.84	*	*	*	*												
Coupling	Socket-Weld. End	76.34.28	*	*	*	*												
Cap	Socket-Weld. End	76.34.18	*	*	*	*												
* VALVES																		
Ball Valve Red. Bore Flanged		75.37.02	*	*	*	*	*	*	*	*	*	*						
Check Valve Butt-Weld. End		75.56.19	*	*	*	*												
Check Valve Flanged		75.37.12	*	*	*	*	*	*	*	*	*	*	*	*	*	*	*	*
Gate Valve Flanged		75.37.32								*	*	*	*	*	*	*	*	*
Globe Valve Butt-Weld. End		75.56.50	*	*	*	*												
Globe Valve Flanged		75.37.42	*	*	*	*	*	*	*	*	*							
* MISCELLANEOUS																		
Gasket, RF. C.A.F		85.31.15/17	*	*	*	*	*	*	*	*	*	*	*	*	*	*	*	*
Orifice Flange Set		60.88.52					*	*	*	*	*	*	*	*	*	*	*	*

Class No.:	AN06	Page:	4	Content:	Reducing Piping Components

Run	Br.	BROB 76.80.05	RECB 76.30.72	REEB 76.30.73	TERB 76.30.85	TERS 76.34.85
20 ×	15		*	*	*	*
25 ×	15		*	*	*	*
25 ×	20		*	*	*	*
40 ×	15		*	*	*	*
40 ×	20		*	*	*	*
40 ×	25		*	*	*	*
50 ×	20		*	*		*
50 ×	25		*	*		
50 ×	40		*	*	*	
80 ×	40		*	*		
80 ×	50	*	*	*	*	
100 ×	40		*	*		
100 ×	50	*	*	*	*	
100 ×	80	*	*	*	*	
150 ×	50	*				
150 ×	80	*	*	*	*	
150 ×	100	*	*	*	*	
200 ×	50	*				
200 ×	80	*				
200 ×	100		*	*	*	
200 ×	150		*	*	*	
250 ×	50	*				
250 ×	80	*				
250 ×	100	*	*	*	*	
250 ×	150		*	*	*	
250 ×	200		*	*	*	
300 ×	50	*				
300 ×	80	*				
300 ×	100	*				
300 ×	150		*	*	*	
300 ×	200		*	*	*	
300 ×	250		*	*	*	
350 ×	50	*				
350 ×	80	*				
350 ×	100	*				
350 ×	150		*	*	*	
350 ×	200		*	*	*	
350 ×	250		*	*	*	
350 ×	300		*	*	*	

Run	Br.	BROB 76.80.05	RECB 76.30.72	REEB 76.30.73	TERB 76.30.85
400 ×	50	*			
400 ×	80	*			
400 ×	100	*			
400 ×	150	*	*	*	*
400 ×	200		*	*	*
400 ×	250		*	*	*
400 ×	300		*	*	*
400 ×	350		*	*	*
450 ×	50	*			
450 ×	80	*			
450 ×	100	*			
450 ×	150	*			
450 ×	200		*	*	*
450 ×	250		*	*	*
450 ×	300		*	*	*
450 ×	350		*	*	*
450 ×	400		*	*	*
500 ×	50	*			
500 ×	80	*			
500 ×	100	*			
500 ×	150	*			
500 ×	200	*	*	*	*
500 ×	250		*	*	*
500 ×	300		*	*	*
500 ×	350		*	*	*
500 ×	400		*	*	*
500 ×	450	*	*	*	*
600 ×	50	*			
600 ×	80	*			
600 ×	100	*			
600 ×	150	*			
600 ×	200	*			
600 ×	250	*	*	*	*
600 ×	300		*	*	*
600 ×	350		*	*	*
600 ×	400		*	*	*
600 ×	450	*	*	*	*
600 ×	500	*	*	*	*

COMP. NAME	DESCRIPTION
BROS	Branch Outlet Socket-Weld. End
BROB	Branch Outlet Butt-Weld. End
RECB	Reducer Conc. Butt-Weld. End
REEB	Reducer Ecc. Butt-Weld. End
TERB	Tee Reducing Butt-Weld. End
TERS	Tee Reducing Socket-Weld. End

RUN	Br.	BROS 76.80.2
40-150	15	*
200-600		*
50-80	20	*
100-600		*
50	25	*
80-100		*
150-600		*
80-100	40	*
150-300		*
350-600		*

Class No.: AN06	Page: 5	Content: Bolting and Assemblies

BOLT SET FLANGED JOINTS

DN	No.	Inch		mm	81.38.61
15	4	1/2	×	60	*
20	4	1/2	×	70	*
25	4	1/2	×	70	*
40	4	1/2	×	80	*
50	4	5/8	×	80	*
80	4	5/8	×	100	*
100	8	5/8	×	100	*
150	8	3/4	×	100	*
200	8	3/4	×	110	*
250	12	7/8	×	120	*
300	12	7/8	×	120	*
350	12	1	×	130	*
400	16	1	×	140	*
450	16	1-1/8	×	150	*
500	20	1-1/8	×	160	*
600	20	1-1/4	×	180	*

BOLT SET ORIFICE FLANGES

DN	No.	Inch		mm	81.38.61
15	4	5/8	×	120	*
20	4	5/8	×	120	*
25	4	5/8	×	120	*
40	4	3/4	×	130	*
50	8	5/8	×	150	*
80	8	3/4	×	150	*
100	12	3/4	×	140	*
150	12	3/4	×	140	*
200	12	7/8	×	150	*
250	16	1	×	170	*
300	16	1-1/8	×	190	*
350	20	1-1/8	×	195	*
400	20	1-1/4	×	210	*
450	24	1-1/4	×	220	*
500	24	1-1/4	×	230	*
600	24	1-1/2	×	260	*

BOLT SET SPECTACLE/SPACER

DN	No.	Inch		mm	81.38.61
15	4	1/2	×	70	*
20	4	1/2	×	70	*
25	4	1/2	×	80	*
40	4	1/2	×	80	*
50	4	5/8	×	90	*
80	4	5/8	×	110	*
100	8	5/8	×	110	*
150	8	3/4	×	120	*
200	8	3/4	×	130	*
250	12	7/8	×	140	*
300	12	7/8	×	150	*
350	12	1	×	160	*
400	16	1	×	170	*
450	16	1-1/8	×	180	*
500	20	1-1/8	×	195	*
600	20	1-1/4	×	220	*

* DRAIN POINT Fig. 2I

Run	DN 15-25	Br	DN 15	
Run	DN 40	Br	DN 20	NO
Branch: Table Page 1				1
Ball Valve Red. Bore Flanged				1
Blind Flange				1
Gasket RF. C.A.F.				2
Stud Bolt with Nuts				8
Welding Neck Flange				1

* DRAIN POINT Fig. 2J

Run	DN 50-600	Br	DN 20	NO.
Branch: Table Page 1				1
Ball Valve Red. Bore Flanged				1
Blind Flange				1
Gasket RF. C.A.F.				2
Pipe Nipple 50 mm				1
Stud Bolt with Nuts				8
Welding Neck Flange				1

* VENT POINT Fig. 1M

Run	DN 15-25	Br	DN 15	
Run	DN 40	Br	DN 20	NO.
Branch: Table Page 1				1
Blind Flange				1
Gasket RF. C.A.F.				1
Globe Valve Butt. Weld End				1
Stud Bolt with Nuts				4
Welding Neck Flange				1

* VENT POINT Fig. 1N

Run	DN 50-600	Br	DN 20	
				No.
Branch: Table Page 1				1
Blind Flange				1
Gasket RF. C.A.F.				1
Globe Valve Butt. Weld End				1
Pipe Nipple 50 mm				1
Stud Bolt with Nuts				4
Welding Neck Flange				1

Class No.: AN07	Page: 1	Content: General

Base Material: Carbon Steel, Fine Grained, LT	First Issue:	Revision:	
Rating: PN 20 (Class 150)		Date:	
Corrosion Allowance: 1 mm		Sign:	

Temperature °C		-50	0	50	75	100	125	150	175	200
Pressure Barg	DN 15-80	18.2	18.2	18.0	17.5	17.0	16.4	15.8	14.8	11.0
	DN 100-150	18.2	18.2	18.0	17.5	17.0	16.4	15.8	14.8	9.0
	DN 200-600	18.2	18.2	18.0	17.5	17.0	16.4	15.8	12.0	7.0

TABLE OF SCHEDULES

DN	Schedule
15	80
20	80
25	80
40	80
50	40
80	40
100	40
150	40
200	20
250	20
300	20
350	20
400	20
450	20
500	20
600	20

BRANCH CONNECTIONS 90 DEGREES

BRANCH SIZE

Run Size	15	20	25	40	50	80	100	150	200	250	300	350	400	450	500	600
600	C	C	C	C	E	E	E	E	E	E	E	E	E	E	E	A
500	C	C	C	C	D	D	D	D	D	D	D	D	D	D	A	
450	C	C	C	C	E	D	D	D	E	E	E	E	E	A		
400	C	C	C	C	D	D	D	D	D	D	D	D	A			
350	C	C	C	C	D	D	D	D	D	D	D	A				
300	C	C	C	C	D	D	D	D	D	D	A					
250	C	C	C	C	D	D	D	D	D	A						
200	C	C	C	C	D	D	D	D	A							
150	C	C	C	C	D	D	D	A								
100	C	C	C	C	D	D	A									
80	C	C	C	C	D	A										
50	C	C	C	B	A											
40	C	B	B	A												
25	B	B	A													
20	B	A														
15	A															

Notes:

-Design limits are acc. flange rating ANSI B16.5 Material Group 1.3 and ball valve rating acc. BS 5351
-Application of other types of branch connections shall be subject to prior approval of company
-Welds, attachment welds and cold formed piping parts shall be post weld heat treated.
- For connections class 300, use equivalent class 300 for flange, bolting and gasket selection

CODE	EXPLANATION OF CHARACTERS
A	Equal tee
B	Reducing tee
C	Branch outlet socket-weld. End
D	Pipe to pipe
E	Branch outlet reducing butt-weld

* PIPE

PIPE	Pipe	DN	15-400	ASTM	A333-6 (Seamless)	
		DN	450-600	ASTM	A671-CC65 (Welded)	
PNPP	Pipe Nipple 50 mm	DN	15-40	ASTM	A333-6 (Seamless)	

* FLANGES

BLFL	Blind Flange	DN	15-600	ASTM	A350-LF2
SBFL	Spectacle Blind Flange	DN	15-600	ASTM	A516-60
SPRT	Spacer Ring Type (ANS Flanges)	DN	15-600	ASTM	A516-60
WNFL	Welding Neck Flange	DN	15-600	ASTM	A350-LF2

* FITTINGS

CAPB	Cap	Butt-Weld. End	DN	15-600	ASTM	A420-WPL6
E45B	Elbow 45 Deg.	Butt-Weld. End	DN	15-600	ASTM	A420-WPL6
E90B	Elbow 90 Deg.	Butt-Weld. End	DN	15-600	ASTM	A420-WPL6
TEEB	Equal Tee	Butt-Weld. End	DN	15-600	ASTM	A420-WPL6
E45S	Elbow 45 Deg.	Socket-Weld. End	DN	15-40	ASTM	A350-LF2
E90S	Elbow 90 Deg.	Socket-Weld. End	DN	15-40	ASTM	A350-LF2
TEES	Equal Tee	Socket-Weld. End	DN	15-40	ASTM	A350-LF2
COUS	Coupling	Socket-Weld. End	DN	15-40	ASTM	A350-LF2
CAPT	Cap	Socket-Weld. End	DN	15-40	ASTM	A350-LF2

* REDUCING FITTINGS

BROS	Branch Outlet Socket-Weld. End	DN	15-50	ASTM	A350-LF2
BROB	Branch Outlet Red. Butt-Weld .	DN	50-500	ASTM	A350-LF2
RECB	Reducer Conc. Butt-Weld. End	DN	20-600	ASTM	A420-WPL6
REEB	Reducer Ecc. Butt-Weld. End	DN	20-600	ASTM	A420-WPL6
TERB	Tee Reducing Butt-Weld. End	DN	20-600	ASTM	A420-WPL6
TERS	Tee Reducing Socket-Weld. End	DN	20-40	ASTM	A350-LF2

Note:
- For full material description see relevant MESC buying description.
- Where both socket weld and butt weld fittings are specified, preference is subject to company approval.

* VALVES

BARF	Ball Valve Red. Bore Flanged	DN	15-250	Body:	ASTM	A352-LCB/C, A350-LF2
				Int.:	AISI 316 (L) / PTFE	
CHVF	Check Valve Flanged	DN	15-600	Body:	ASTM	A352-LCB/C, A350-LF2
				Trim:	AISI	316 (L) + Stellite 6
GAVF	Gate Valve Flanged	DN	150-600	Body:	ASTM	A352-LCB/C, A350-LF2
				Trim:	AISI	316 (L) + Stellite 6
GLVF	Globe Valve Flanged	DN	15-200	Body:	ASTM	A352-LCB/C, A350-LF2
				Trim:	AISI	316 (L) + Stellite 6

* MISCELLANEOUS

GKTI	Gasket,	DN	15-600	C.A.F		
ORFS	Orifice Flange Set	DN	50-600		ASTM	A350-LF2
STBT	Stud Bolt with Nuts		---	Studs:	ASTM	A320-L7
				Nuts:	ASTM	A194-4

Class No.: AN07	Page: 3	Content: Piping Components

ITEM DESCRIPTION			NOMINAL PIPE SIZE 15	20	25	40	50	80	100	150	200	250	300	350	400	450	500	600
* PIPE																		
Pipe		74.30.10														*	*	*
		74.14.23/31	*	*	*	*	*	*	*	*	*	*	*	*	*			
* FLANGES																		
Blind Flange		76.62.12	*	*	*	*	*	*	*	*	*	*	*	*	*	*	*	*
Welding Neck Flange		76.62.82	*	*	*	*	*	*	*	*	*	*	*	*	*	*	*	*
* FITTINGS																		
Cap	Butt-Weld. End	76.31.18	*	*	*	*	*	*	*	*	*	*	*	*	*	*	*	*
Elbow 45 Deg.	Butt-Weld. End	76.31.38	*	*	*	*	*	*	*	*	*	*	*	*	*	*	*	*
Elbow 90 Deg.	Butt-Weld. End	76.31.39	*	*	*	*	*	*	*	*	*	*	*	*	*	*	*	*
Equal Tee	Butt-Weld. End	76.31.84	*	*	*	*	*	*	*	*	*	*	*	*	*	*	*	*
Elbow 45 Deg.	Socket-Weld. End	76.35.38	*	*	*	*												
Elbow 90 Deg.	Socket-Weld. End	76.35.39	*	*	*	*												
Equal Tee	Socket-Weld. End	76.35.80	*	*	*	*												
Coupling	Socket-Weld. End	76.35.28	*	*	*	*												
Cap	Threaded	76.07.18	*	*	*	*												
* VALVES																		
Ball Valve Red. Bore Flanged		75.72.00	*	*	*	*	*	*	*	*	*	*						
Check Valve Flanged		75.42.13	*	*	*	*	*	*	*	*	*	*	*	*	*	*	*	*
Gate Valve Flanged		75.42.32								*	*	*	*	*	*	*	*	*
Globe Valve Flanged		75.42.40	*	*	*	*	*	*	*	*	*							
* MISCELLANEOUS																		
Gasket, C.A.F		85.31.16/17	*	*	*	*	*	*	*	*	*	*	*	*	*	*	*	*
Orifice Flange Set		60.88.00					*	*	*	*	*	*	*	*	*	*	*	*

Class No.:	AN06	Page:	4	Content:	Reducing Piping Components

Run	Br.	BROB 76.80.05	RECB 76.30.72	REEB 76.30.73	TERB 76.30.85	TERS 76.34.85
20 ×	15		*	*	*	*
25 ×	15		*	*	*	*
25 ×	20		*	*	*	*
40 ×	15		*	*	*	*
40 ×	20		*	*	*	*
40 ×	25		*	*	*	*
50 ×	20		*	*	*	*
50 ×	25		*	*	*	
50 ×	40		*	*	*	
80 ×	40		*	*	*	
80 ×	50	*	*	*	*	
100 ×	40		*	*	*	
100 ×	50	*	*	*	*	
100 ×	80	*	*	*	*	
150 ×	50	*				
150 ×	80	*	*	*	*	
150 ×	100	*	*	*	*	
200 ×	50	*				
200 ×	80	*				
200 ×	100		*	*	*	
200 ×	150		*	*	*	
250 ×	50	*				
250 ×	80	*				
250 ×	100	*	*	*	*	
250 ×	150		*	*	*	
250 ×	200		*	*	*	
300 ×	50	*				
300 ×	80	*				
300 ×	100	*				
300 ×	150		*	*	*	
300 ×	200		*	*	*	
300 ×	250		*	*	*	
350 ×	50	*				
350 ×	80	*				
350 ×	100	*				
350 ×	150		*	*	*	
350 ×	200		*	*	*	
350 ×	250		*	*	*	
350 ×	300		*	*	*	

Run	Br.	BROB 76.80.05	RECB 76.30.72	REEB 76.30.73	TERB 76.30.85
400 ×	50	*			
400 ×	80	*			
400 ×	100	*			
400 ×	150	*	*	*	*
400 ×	200		*	*	*
400 ×	250		*	*	*
400 ×	300		*	*	*
400 ×	350		*	*	*
450 ×	50	*			
450 ×	80	*			
450 ×	100	*			
450 ×	150	*			
450 ×	200		*	*	*
450 ×	250		*	*	*
450 ×	300		*	*	*
450 ×	350		*	*	*
450 ×	400		*	*	*
500 ×	50	*			
500 ×	80	*			
500 ×	100	*			
500 ×	150	*			
500 ×	200	*	*	*	*
500 ×	250		*	*	*
500 ×	300		*	*	*
500 ×	350		*	*	*
500 ×	400		*	*	*
500 ×	450	*	*	*	*
600 ×	50	*			
600 ×	80	*			
600 ×	100	*			
600 ×	150	*			
600 ×	200	*			
600 ×	250	*	*	*	*
600 ×	300		*	*	*
600 ×	350		*	*	*
600 ×	400		*	*	*
600 ×	450	*	*	*	*
600 ×	500	*	*	*	*

COMP. NAME	DESCRIPTION
BROS	Branch Outlet, Socket-Weld. End
BROB	Branch Outlet Red. Butt-Weld
RECB	Reducer Conc. Butt-Weld. End
REEB	Reducer Ecc. Butt-Weld. End
TERB	Tee Reducing Butt-Weld. End
TERS	Tee Reducing Socket-Weld. End

RUN	Br.	BROS 76.80.28
40-150	15	*
200-600		*
50-80	20	*
100-600		*
50	25	*
80-100		*
150-600		*
80-100	40	*
150-300		*
350-600		*

Class No.: AN06	Page: 5	Content: Bolting and Assemblies

BOLT SET FLANGED JOINTS

DN	No.	Inch		mm	81.38.61
15	4	1/2	×	60	*
20	4	1/2	×	70	*
25	4	1/2	×	70	*
40	4	1/2	×	80	*
50	4	5/8	×	80	*
80	4	5/8	×	100	*
100	8	5/8	×	100	*
150	8	3/4	×	100	*
200	8	3/4	×	110	*
250	12	7/8	×	120	*
300	12	7/8	×	120	*
350	12	1	×	130	*
400	16	1	×	140	*
450	16	1-1/8	×	150	*
500	20	1-1/8	×	160	*
600	20	1-1/4	×	180	*

BOLT SET SPECTACLE/SPACER

DN	No.	Inch		mm	81.38.61
15	4	1/2	×	70	*
20	4	1/2	×	70	*
25	4	1/2	×	80	*
40	4	1/2	×	80	*
50	4	5/8	×	90	*
80	4	5/8	×	110	*
100	8	5/8	×	110	*
150	8	3/4	×	120	*
200	8	3/4	×	130	*
250	12	7/8	×	140	*
300	12	7/8	×	150	*
350	12	1	×	160	*
400	16	1	×	170	*
450	16	1-1/8	×	180	*
500	20	1-1/8	×	195	*
600	20	1-1/4	×	220	*

BOLT SET ORIFICE FLANGES

DN	No.	Inch		mm	81.38.61
15	4	5/8	×	120	*
20	4	5/8	×	120	*
25	4	5/8	×	120	*
40	4	3/4	×	130	*
50	8	5/8	×	150	*
80	8	3/4	×	150	*
100	12	3/4	×	140	*
150	12	3/4	×	140	*
200	12	7/8	×	150	*
250	16	1	×	170	*
300	16	1-1/8	×	190	*
350	20	1-1/8	×	195	*
400	20	1-1/4	×	210	*
450	24	1-1/4	×	220	*
500	24	1-1/4	×	230	*
600	24	1-1/2	×	260	*

* DRAIN POINT	Fig. 2I		
Run	DN 15-25	Br	DN 15
Run	DN 40	Br	DN 20 NO.
Branch: Table Page 1			1
Ball Valve Red. Bore Flanged			1
Blind Flange			1
Gasket RF. C.A.F.			2
Pipe Nipple 50 mm			1
Stud Bolt with Nuts			8
Welding Neck Flange			1

* DRAIN POINT	Fig. 2J		
Run	DN 50-600	Br	DN 20 No.
Branch: Table Page 1			1
Ball Valve Red. Bore Flanged			1
Blind Flange			1
Gasket RF. C.A.F.			2
Pipe Nipple 50 mm			1
Stud Bolt with Nuts			8
Welding Neck Flange			1

* VENT POINT	Fig. 1J		
Run	DN 15-25	Br	DN 15
Run	DN 40	Br	DN 20 NO.
Branch: Table Page 1			1
Blind Flange			1
Gasket RF. C.A.F.			2
Globe Valve Flanged			1
Pipe Nipple 50 mm			1
Stud Bolt with Nuts			8
Welding Neck Flange			1

* VENT POINT	Fig. 1J		
Run	DN 50-600	Br	DN 20 NO
Branch: Table Page 1			1
Blind Flange			1
Gasket RF. C.A.F.			2
Globe Valve Flanged			1
Pipe Nipple 50 mm			1
Stud Bolt with Nuts			8
Welding Neck Flange			1

Class No.: AN09	Page: 1	Content: General
Base Material: Carbon Steel	First Issue: Revision:	
Rating: PN 20 (Class 150)	Date:	
Corrosion Allowance: 1 mm	Sign:	

Temperature °C		0	50	60
Pressure Barg	DN 15-80	16.0	16.0	16.0

TABLE OF SCHEDULES

DN	Schedule
15	80
20	80
25	80
40	80
50	40
80	40
100	40
150	40
200	20
250	20
300	20
350	20
400	20
450	20
500	20
600	20

BRANCH CONNECTIONS 90 DEGREES
BRANCH SIZE

Run Size	15	20	25	40	50	80	100	150	200	250	300	350	400	450	500	600
600	C	C	C	C	D	D	D	D	D	D	D	D	D	D	D	A
500	C	C	C	C	D	D	D	D	D	D	D	D	D	D	A	
450	C	C	C	C	D	D	D	D	D	D	D	D	D	A		
400	C	C	C	C	D	D	D	D	D	D	D	D	A			
350	C	C	C	C	D	D	D	D	D	D	D	A				
300	C	C	C	C	D	D	D	D	D	D	A					
250	C	C	C	C	D	D	D	D	D	A						
200	C	C	C	C	D	D	D	D	A							
150	C	C	C	C	D	D	D	A								
150	C	C	C	C	D	D	D	A								
80	C	C	C	C	D	A										
50	C	C	C	B	A											
40	C	B	B	A												
25	B	B	A													
20	B	A														
15	A															

Notes:

-Design limits are acc. butterfly valve rating BS5155.
- API 5L-B welded pipe is normally the most economic choice.
- Application of other types of branch connections shall be subject to prior approval of company
- For connections class 300, use equivalent class 300 for flange, bolting and gasket selection.

CODE	EXPLANATION OF CHARACTERS
A	Equal tee
B	Reducing tee
C	Branch fitting outlet socket-weld end
D	Pipe to pipe

Class No.: AN09	Page: 2	Content: Material Descriptions

* PIPE

PIPE	Pipe	DN	15-100	API 5L-B	(Seamless)
		DN	150-500	API 5L-B	(Welded)
		DN	600-600	API 5L-B	(Welded)
PNPP	Pipe Nipple 50 mm	DN	15-40	ASTM	A 106 B

* FLANGES

BLFL	Blind Flange	DN	15-600	ASTM	A105
SBFL	Spectacle Blind Flange	DN	15-600	ASTM	A516-60
SOFL	Slip-On Flange	DN	15-600	ASTM	A105
SPRT	Spacer Ring Type (ANS Flanges)	DN	15-600	ASTM	A516-60
WNFL	Welding Neck Flange	DN	15-600	ASTM	A105

* FITTINGS

CAPB	Cap	Butt-Weld. End	DN	15-600	ASTM	A234-WPB
E45B	Elbow 45 Deg.	Butt-Weld. End	DN	15-600	ASTM	A234-WPB
E90B	Elbow 90 Deg.	Butt-Weld. End	DN	15-600	ASTM	A234-WPB
TEEB	Equal Tee	Butt-Weld. End	DN	15-600	ASTM	A234-WPB
E45S	Elbow 45 Deg.	Socket-Weld. End	DN	15-40	ASTM	A105
E90S	Elbow 90 Deg.	Socket-Weld. End	DN	15-40	ASTM	A105
TEES	Equal Tee	Socket-Weld. End	DN	15-40	ASTM	A105
COUS	Coupling	Socket-Weld. End	DN	15-40	ASTM	A105
CAPS	Cap	Socket-Weld. End	DN	15-40	ASTM	A105

* REDUCING FITTINGS

BROS	Branch Fitting Outlet Socket-Weld. End	DN	15-40	ASTM	A105
BROT	Branch Fitting Outlet Threaded End	DN	15-40	ASTM	A105
BROB	Branch Outlet Red. Butt-Weld.	DN	50-600	ASTM	A105
RECB	Reducer Conc. Butt-Weld. End	DN	20-600	ASTM	A234-WPB
REEB	Reducer Ecc. Butt-Weld. End	DN	20-600	ASTM	A234-WPB
TERB	Tee Reducing Butt-Weld. End	DN	20-600	ASTM	A234-WPB
TERS	Tee Reducing Socket-Weld. End	DN	20-40	ASTM	A105

Note:
- For full material description see relevant MESC buying description.
- Where both socket weld and butt weld fittings are specified, preference is subject to company approval.

* VALVES

BARF	Ball Valve Red. Bore Flanged	DN	15-250	Body:	ASTM	A216-WCB/WCC, A105
				Ball/Stem:	AISI 316, 316L	
				Seats:	PTFE	
BART	Ball Valve Red. Bore	DN	15-40	Body:	ASTM	A216-WCB/WCC, A105
				Ball/Stem:	AISI 316, 316L	
				Seats:	PTFE	
BUVW	Butterfly Valve Wafer Type	DN	50-600	Body:	ASTM	A216-WCB/WCC, A105
					Rubber Lined, Cr	
				Disc:	ASTM	A351-CD8M
CHVF	Check Valve Flanged	DN	15-600	Body:	ASTM	A216-WCB/WCC, A105
				Trim:	AISI	410
CHVW	Check Valve Wafer Type	DN	15-600	Body:	ASTM	A216-WCB/WCC, A105
				Plate:	AISI	410
				Seat:	PTFE or FKM	
GAVF	Gate Valve Flanged	DN	15-600	Body:	ASTM	A216-WCB/WCC, A105
				Trim:	AISI	410

* MISCELLANEOUS

GKRF	Gasket, Raised Face	DN	15-600	CAF, Oil Resistant 1.5 mm		
ORFS	Orifice Flange Set	DN	50-600		ASTM	A350-LF2
STBT	Stud Bolt with Nuts		----	Studs:	ASTM	A193-B7
				Nuts:	ASTM	A194-2H

Class No.: AN09	Page: 3	Content: Piping Components

ITEM DESCRIPTION			NOMINAL PIPE SIZE 15	20	25	40	50	80	100	150	200	250	300	350	400	450	500	600
* PIPE																		
Pipe	API-5L GR.B SML	74.13.21/23	*	*	*	*	*	*	*									
	API-5L GR.B ERW	74.13.23								*	*	*	*	*	*	*	*	
	API-5L GR.B SAW	74.30.21/23																*
Pipe nipple (50 mm) ASTM A 106 B		76.05.56	*	*	*	*												
* FLANGES																		
Blind Flange		76.62.10	*	*	*	*	*	*	*	*	*	*	*	*	*	*	*	*
Spectacle Blind Flange		76.88.06	*	*	*	*	*	*	*	*	*	*	*	*	*	*	*	*
Slip-On Flange		76.62.30	*	*	*	*	*	*	*	*	*	*	*	*	*	*	*	*
Welding Neck Flange		76.62.79	*	*	*	*	*	*	*	*	*	*	*	*	*	*	*	*
* FITTINGS																		
Cap	Butt-Weld. End	76.30.18	*	*	*	*	*	*	*	*	*	*	*	*	*	*	*	*
Elbow 45 Deg.	Butt-Weld. End	76.30.38	*	*	*	*	*	*	*	*	*	*	*	*	*	*	*	*
Elbow 90 Deg.	Butt-Weld. End	76.30.40	*	*	*	*	*	*	*	*	*	*	*	*	*	*	*	*
Equal Tee	Butt-Weld. End	76.30.84	*	*	*	*	*	*	*	*	*	*	*	*	*	*	*	*
Elbow 45 Deg.	Socket-Weld. End	76.34.38	*	*	*	*												
Elbow 90 Deg.	Socket-Weld. End	76.34.39	*	*	*	*												
Equal Tee	Socket-Weld. End	76.34.84	*	*	*	*												
Coupling	Socket-Weld. End	76.34.28	*	*	*	*												
Cap	Threaded	76.05.56	*	*	*	*												
* VALVES																		
Ball Valve Red. Bore Flanged		75.37.02	*	*	*	*	*	*	*	*	*	*						
Ball Valve Red. Bore Threaded		75.72.00	*	*	*	*												
Butterfly Valve Wafer Type		75.72.00				*	*	*	*	*	*	*	*	*	*	*	*	
Check Valve Flanged		75.37.12	*	*	*	*	*	*	*	*	*	*	*	*	*	*	*	*
Check Valve Wafer Type		75.37.12				*	*	*	*	*	*	*	*	*	*	*	*	
Gate Valve Flanged		75.37.32	*	*	*	*	*	*	*	*	*	*	*	*	*	*	*	*
* MISCELLANEOUS																		
Gasket, Raised Face		85.31.15/17	*	*	*	*	*	*	*	*	*	*	*	*	*	*	*	*
Orifice Flange Set		60.88.52					*	*	*	*	*	*	*	*	*	*	*	*

Class No.: AN09	Page: 4	Content: Reducing Piping Components

Run		Br.	BROB 76.80.05	RECB 76.30.72	REEB 76.30.73	TERB 76.30.85	TERS 76.34.85
20	×	15		*	*	*	*
25	×	15		*	*	*	*
25	×	20		*	*	*	*
40	×	15				*	*
40	×	20		*	*	*	*
40	×	25		*	*	*	*
50	×	25		*	*		
50	×	40		*	*		
80	×	40		*	*		
80	×	50	*	*	*	*	
100	×	50	*	*	*	*	
100	×	80	*	*	*	*	
150	×	50	*				
150	×	80	*	*	*	*	
150	×	100	*	*	*	*	
200	×	50	*				
200	×	80	*				
200	×	100	*	*	*	*	
200	×	150	*	*	*	*	
250	×	50	*				
250	×	80	*				
250	×	100	*			*	
250	×	150	*	*	*	*	
250	×	200	*	*	*	*	
300	×	50	*				
300	×	80	*				
300	×	100	*				
300	×	150	*	*	*	*	
300	×	200	*	*	*	*	
300	×	250	*	*	*	*	
350	×	50	*				
350	×	80	*				
350	×	100	*				
350	×	150	*			*	
350	×	200	*	*	*	*	
350	×	250	*	*	*	*	
350	×	300	*	*	*	*	

Run		Br.	BROB 76.80.05	RECB 76.30.72	REEB 76.30.73	TERB 76.30.85
400	×	50	*			
400	×	80	*			
400	×	100	*			
400	×	150	*			
400	×	200	*	*	*	*
400	×	250	*	*	*	*
400	×	300	*	*	*	*
400	×	350	*	*	*	*
450	×	50	*			
450	×	80	*			
450	×	100	*			
450	×	150	*			
450	×	200	*			
450	×	250	*	*	*	
450	×	300	*	*	*	
450	×	350	*	*	*	
450	×	400	*	*	*	
500	×	50	*			
500	×	80	*			
500	×	100	*			
500	×	150	*			
500	×	200	*			
500	×	250	*			
500	×	300	*	*	*	
500	×	350	*	*	*	
500	×	400	*	*	*	
500	×	450	*	*	*	*
600	×	50	*			
600	×	80	*			
600	×	100	*			
600	×	150	*			
600	×	200	*			
600	×	250	*			
600	×	300	*			
600	×	350	*			
600	×	400	*	*	*	
600	×	450	*	*	*	*
600	×	500	*	*	*	*

COMP. NAME	DESCRIPTION
BROS	Branch Fitting Outlet Socket-Weld. End
BROT	Branch Fitting Outlet Threaded End
BROB	Branch Outlet Red. Butt-Weld
RECB	Reducer Conc. Butt-Weld. End
REEB	Reducer Ecc. Butt-Weld. End
TERB	Tee Reducing Butt-Weld. End

RUN	Br.	BROS 76.80.28	BROT 76.80.0
40-150	15	*	*
200-600		*	*
50-80	20	*	*
100-600		*	*
50	25	*	*
80-100		*	*
150-600		*	*
80-100	40	*	*
150-300		*	*
350-600		*	*

Class No.: AN06	Page: 5	Content: Bolting and Assemblies

BOLT SET FLANGED JOINTS

DN	No.	Inch		mm	81.38.61
15	4	1/2	×	60	*
20	4	1/2	×	65	*
25	4	1/2	×	70	*
40	4	1/2	×	75	*
50	4	5/8	×	80	*
80	4	5/8	×	95	*
100	8	5/8	×	95	*
150	8	3/4	×	100	*
200	8	3/4	×	110	*
250	12	7/8	×	120	*
300	12	7/8	×	120	*
350	12	1	×	130	*
400	16	1	×	140	*
450	16	1-1/8	×	150	*
500	20	1-1/8	×	160	*
600	20	1-1/4	×	180	*

BOLT SET SPECTACLE/SPACER

DN	No.	Inch		mm	81.38.61
15	4	1/2	×	70	*
20	4	1/2	×	70	*
25	4	1/2	×	80	*
40	4	1/2	×	80	*
50	4	5/8	×	90	*
80	4	5/8	×	110	*
100	8	5/8	×	110	*
150	8	3/4	×	120	*
200	8	3/4	×	125	*
250	12	7/8	×	140	*
300	12	7/8	×	145	*
350	12	1	×	160	*
400	16	1	×	170	*
450	16	1-1/8	×	180	*
500	20	1-1/8	×	195	*
600	20	1-1/4	×	215	*

BOLT SET ORIFICE FLANGES

DN	No.	Inch		mm	81.38.61
15	4	5/8	×	120	*
20	4	5/8	×	120	*
25	4	5/8	×	120	*
40	4	3/4	×	130	*
50	8	5/8	×	150	*
80	8	3/4	×	150	*
100	12	3/4	×	140	*
150	12	3/4	×	140	*
200	12	7/8	×	150	*
250	16	1	×	170	*
300	16	1-1/8	×	190	*
350	20	1-1/8	×	195	*
400	20	1-1/4	×	210	*
450	24	1-1/4	×	220	*
500	24	1-1/4	×	230	*
600	24	1-1/2	×	260	*

* DRAIN POINT	Fig. 2B		
Run	DN 15-25	Br	DN 15
Run	DN 40	Br	DN 20

	No.
Branch: Table Page 1	1
Ball Valve Red. Bore Threaded	1
Cap Threaded	1
Pipe Nipple Plain/Threaded	1
Pipe Nipple Thrd. Ends L = 50 mm	1

* DRAIN POINT	Fig. 2B		
Run	DN 50-600	Br	DN 20

	No.
Branch: Table Page 1	1
Ball Valve Red. Bore Threaded	1
Cap Threaded	1
Pipe Nipple Thrd. Ends L = 50 mm	1

* VENT POINT	Fig. 2B		
Run	DN 15-25	Br	DN 15
Run	DN 40	Br	DN 20

	No.
Branch: Table Page 1	1
Ball Valve Red. Bore Threaded	1
Cap Threaded	1
Pipe Nipple Plain/Threaded	1
Pipe Nipple Thrd. Ends L = 50 mm	1

* VENT POINT	Fig. 2B		
Run	DN 50-600	Br	DN 20

	No.
Branch: Table Page 1	1
Ball Valve Red. Bore Threaded	1
Cap Threaded	1
Pipe Nipple Thrd. Ends L = 50 mm	1

Class No.: AN10	Page: 1	Content: General
Base Material: Carbon Steel	First Issue: Revision:	
Rating: PN 20 (Class 150)	Date:	
Corrosion Allowance: 1 mm	Sign:	

Temperature °C		0	50	100	150	200	250	300	350	400
Pressure Barg	DN 15-80	19.6	19.2	17.6	15.8	13.9	12.0	10.2	8.3	6.5

TABLE OF SCHEDULES

DN	Schedule
15	80
20	80
25	80
40	80
50	40
80	40
100	40
150	40
200	20
250	20
300	20
350	20
400	20
450	20
500	20
600	20

BRANCH CONNECTIONS 90 DEGREES
BRANCH SIZE

Run Size	15	20	25	40	50	80	100	150	200	250	300	350	400	450	500	600
600	C	C	C	C	E	E	E	E	E	E	E	E	E	E	E	A
500	C	C	C	C	D	D	D	D	D	D	D	D	D	D	A	
450	C	C	C	C	E	D	D	D	E	E	E	E	E	A		
400	C	C	C	C	D	D	D	D	D	D	D	D	A			
350	C	C	C	C	D	D	D	D	D	D	D	A				
300	C	C	C	C	D	D	D	D	D	D	A					
250	C	C	C	C	D	D	D	D	D	A						
200	C	C	C	C	D	D	D	D	A							
150	C	C	C	C	D	D	D	A								
100	C	C	C	C	D	D	A									
80	C	C	C	C	D	A										
50	C	C	C	B	A											
40	C	B	B	A												
25	B	B	A													
20	B	A														
15	A															

Notes:

- Design limits are acc. flange rating ANSI B16.5 Material Group 1.1.
- Piston type check valves for horizontal mounting only.
- Application of other types of branch connections shall be subject to prior approval of company
- For connections class 300, use equivalent class 300 for flange, bolting and gasket selection.

CODE	EXPLANATION OF CHARACTERS
A	Equal tee
B	Reducing tee
C	Branch fitting outlet socket-weld end
D	Pipe to pipe
E	Branch outlet reducing butt-weld

Class No.: AN10	Page: 2	Content: Material Descriptions

* PIPE

PIPE	Pipe	DN	15-100	API	5L-B (Seamless)
		DN	150-500	API	5L-B ERW
		DN	600-600	API	5L-B SAW
PNPP	Pipe Nipple 50 mm	DN	15-40	ASTM	A106 B

* FLANGES

BLFL	Blind Flange	DN	15-600	ASTM	A105
SBFL	Spectacle Blind Flange	DN	15-600	ASTM	A516-60
SOFL	Slip-On Flange	DN	15-600	ASTM	A105
SPRT	Spacer Ring Type (ANS Flanges)	DN	15-600	ASTM	A516-60
WNFL	Welding Neck Flange	DN	15-600	ASTM	A105

* FITTINGS

CAPB	Cap	Butt-Weld. End	DN	15-600	ASTM	A234-WPB
E45B	Elbow 45 Deg.	Butt-Weld. End	DN	15-600	ASTM	A234-WPB
E90B	Elbow 90 Deg.	Butt-Weld. End	DN	15-600	ASTM	A234-WPB
TEEB	Equal Tee	Butt-Weld. End	DN	15-600	ASTM	A234-WPB
E45S	Elbow 45 Deg.	Socket-Weld. End	DN	15-40	ASTM	A105
E90S	Elbow 90 Deg.	Socket-Weld. End	DN	15-40	ASTM	A105
TEES	Equal Tee	Socket-Weld. End	DN	15-40	ASTM	A105
COUS	Coupling	Socket-Weld. End	DN	15-40	ASTM	A105
CAPS	Cap	Socket-Weld. End	DN	15-40	ASTM	A105

* REDUCING FITTINGS

BROS	Branch Fitting Outlet Socket-Weld. End	DN	15-40	ASTM	A105
BROB	Branch Outlet Red. Butt-Weld.	DN	50-500	ASTM	A105
RECB	Reducer Conc. Butt-Weld. End	DN	20-600	ASTM	A234-WPB
REEB	Reducer Ecc. Butt-Weld. End	DN	20-600	ASTM	A234-WPB
TERB	Tee Reducing Butt-Weld. End	DN	20-600	ASTM	A234-WPB
TERS	Tee Reducing Socket-Weld. End	DN	20-40	ASTM	A105

Note:
- For full material description see relevant MESC buying description.
- Where both socket weld and butt weld fittings are specified, preference is subject to company approval.

* VALVES

CHVF	Check Valve Flanged	DN	15-600	Body:	ASTM	A216-WCB/WCC, A105
				Trim:	AISI	410
CHVS	Check Valve Socket	DN	15-40	Body:	ASTM	A216-WCB/WCC, A105
				Trim:	AISI	410
GAVF	Gate Valve Flanged	DN	15-600	Body:	ASTM	A216-WCB/WCC, A105
				Trim:	AISI	410
GAVS	Gate Valve Sw	DN	15-40	Body:	ASTM	A216-WCB/WCC, A105
				Trim:	AISI	410
GLVF	Globe Valve Flanged	DN	15-200	Body:	ASTM	A216-WCB/WCC, A105
				Trim:	AISI	410
GLVS	Globe Valve Socket	DN	15-40	Body:	ASTM	A216-WCB/WCC, A105
				Trim:	AISI	410

* MISCELLANEOUS

GKRF	Gasket,	DN	15-600	CAF, Oil, Resistant 1.5 mm		
ORFS	Orifice Flange Set	DN	50-600		ASTM	A105
STBT	Stud Bolt with Nuts		----	Studs:	ASTM	A193-B7
				Nuts:	ASTM	A194-2H

Class No.: AN10	Page: 3	Content: Piping Components

ITEM DESCRIPTION			NOMINAL PIPE SIZE 15	20	25	40	50	80	100	150	200	250	300	350	400	450	500	600
* PIPE																		
Pipe	API-5L GR.B SML	74.13.21/23	*	*	*	*	*	*	*									
	API-5L GR.B ERW	74.13.23								*	*	*	*	*	*	*	*	
	API-5L GR.B SAW	74.30.21/23																*
Pipe nipple (50 mm) ASTM A 106 B		76.05.56	*	*	*	*												
* FLANGES																		
Blind Flange		76.62.10	*	*	*	*	*	*	*	*	*	*	*	*	*	*	*	*
Spectacle Blind Flange		76.88.06	*	*	*	*	*	*	*	*	*	*	*	*	*	*	*	*
Slip-On Flange		76.62.30	*	*	*	*	*	*	*	*	*	*	*	*	*	*	*	*
Welding Neck Flange		76.62.79	*	*	*	*	*	*	*	*	*	*	*	*	*	*	*	*
* FITTINGS																		
Cap	Butt-Weld. End	76.30.18	*	*	*	*	*	*	*	*	*	*	*	*	*	*	*	*
Elbow 45 Deg.	Butt-Weld. End	76.30.38	*	*	*	*	*	*	*	*	*	*	*	*	*	*	*	*
Elbow 90 Deg.	Butt-Weld. End	76.30.40	*	*	*	*	*	*	*	*	*	*	*	*	*	*	*	*
Equal Tee	Butt-Weld. End	76.30.84	*	*	*	*	*	*	*	*	*	*	*	*	*	*	*	*
Elbow 45 Deg.	Socket-Weld. End	76.34.38	*	*	*	*												
Elbow 90 Deg.	Socket-Weld. End	76.34.39	*	*	*	*												
Equal Tee	Socket-Weld. End	76.34.84	*	*	*	*												
Coupling	Socket-Weld. End	76.34.28	*	*	*	*												
Cap	Threaded	76.05.56	*	*	*	*												
* VALVES																		
Check Valve Flanged	75.37.12		*	*	*	*	*	*	*	*	*	*	*	*	*	*	*	*
Check Valve Socket	75.56.13		*	*	*	*												
Gate Valve Flanged	75.37.32		*	*	*	*	*	*	*	*	*	*	*	*	*	*	*	*
Gate Valve Sw	75.56.35		*	*	*	*												
Globe Valve Flanged	75.37.42		*	*	*	*	*	*	*	*	*							
Globe Valve Socket	75.56.45		*	*	*	*												
* MISCELLANEOUS																		
Gasket, Raised Face		85.31.15/17	*	*	*	*	*	*	*	*	*	*	*	*	*	*	*	*
Orifice Flange Set		60.88.52					*	*	*	*	*	*	*	*	*	*	*	*

Class No.: AN09	Page: 4	Content: Reducing Piping Components

Run	Br.	BROB 76.80.05	RECB 76.30.72	REEB 76.30.73	TERB 76.30.85	TERS 76.34.85
20 ×	15		*	*	*	*
25 ×	15		*	*	*	*
25 ×	20		*	*	*	*
40 ×	15				*	*
40 ×	20		*	*	*	*
40 ×	25		*	*	*	*
50 ×	25		*	*		
50 ×	40		*	*		
80 ×	40		*	*		
80 ×	50	*	*	*	*	
100 ×	50	*	*	*	*	
100 ×	80	*	*	*	*	
150 ×	50	*				
150 ×	80	*	*	*	*	
150 ×	100	*	*	*	*	
200 ×	50	*				
200 ×	80	*				
200 ×	100	*	*	*	*	
200 ×	150	*	*	*	*	
250 ×	50	*				
250 ×	80	*				
250 ×	100	*			*	
250 ×	150	*	*	*	*	
250 ×	200	*	*	*	*	
300 ×	50	*				
300 ×	80	*				
300 ×	100	*				
300 ×	150	*	*	*	*	
300 ×	200	*	*	*	*	
300 ×	250	*	*	*	*	
350 ×	50	*				
350 ×	80	*				
350 ×	100	*				
350 ×	150	*			*	
350 ×	200	*	*	*	*	
350 ×	250	*	*	*	*	
350 ×	300	*	*	*	*	

Run	Br.	BROB 76.80.05	RECB 76.30.72	REEB 76.30.73	TERB 76.30.85
400 ×	50	*			
400 ×	80	*			
400 ×	100	*			
400 ×	150	*			
400 ×	200	*	*	*	*
400 ×	250	*	*	*	*
400 ×	300	*	*	*	*
400 ×	350	*	*	*	*
450 ×	50	*			
450 ×	80	*			
450 ×	100	*			
450 ×	150	*			
450 ×	200	*			
450 ×	250	*	*	*	
450 ×	300	*	*	*	
450 ×	350	*	*	*	
450 ×	400	*	*	*	
500 ×	50	*			
500 ×	80	*			
500 ×	100	*			
500 ×	150	*			
500 ×	200	*			
500 ×	250	*			
500 ×	300	*	*	*	
500 ×	350	*	*	*	
500 ×	400	*	*	*	
500 ×	450	*	*	*	*
600 ×	50	*			
600 ×	80	*			
600 ×	100	*			
600 ×	150	*			
600 ×	200	*			
600 ×	250	*			
600 ×	300	*			
600 ×	350	*			
600 ×	400	*	*	*	
600 ×	450	*	*	*	*
600 ×	500	*	*	*	*

COMP. NAME	DESCRIPTION
BROS	Branch Fitting Outlet Socket-Weld. End
BROB	Branch Outlet Red. Butt-Weld
RECB	Reducer Conc. Butt-Weld. End
REEB	Reducer Ecc. Butt-Weld. End
TERB	Tee Reducing Butt-Weld. End
TERS	Tee Reducing Socket-Weld. End

RUN	Br.	BROS 76.80.2
40-150	15	*
200-600		*
50-80	20	*
100-600		*
50	25	*
80-100		*
150-600		*
80-100	40	*
150-300		*
350-600		*

Class No.: AN06	Page: 5	Content: Bolting and Assemblies

BOLT SET FLANGED JOINTS

DN	No.	Inch		mm	81.38.61
15	4	1/2	×	60	*
20	4	1/2	×	65	*
25	4	1/2	×	70	*
40	4	1/2	×	75	*
50	4	5/8	×	80	*
80	4	5/8	×	95	*
100	8	5/8	×	95	*
150	8	3/4	×	100	*
200	8	3/4	×	110	*
250	12	7/8	×	120	*
300	12	7/8	×	120	*
350	12	1	×	130	*
400	16	1	×	140	*
450	16	1-1/8	×	150	*
500	20	1-1/8	×	160	*
600	20	1-1/4	×	180	*

BOLT SET SPECTACLE/SPACER

DN	No.	Inch		mm	81.38.61
15	4	1/2	×	70	*
20	4	1/2	×	70	*
25	4	1/2	×	80	*
40	4	1/2	×	80	*
50	4	5/8	×	90	*
80	4	5/8	×	110	*
100	8	5/8	×	110	*
150	8	3/4	×	120	*
200	8	3/4	×	125	*
250	12	7/8	×	140	*
300	12	7/8	×	145	*
350	12	1	×	160	*
400	16	1	×	170	*
450	16	1-1/8	×	180	*
500	20	1-1/8	×	195	*
600	20z	1-1/4	×	215	*

BOLT SET ORIFICE FLANGES

DN	No.	Inch		mm	81.38.61
15	4	5/8	×	120	*
20	4	5/8	×	120	*
25	4	5/8	×	120	*
40	4	3/4	×	130	*
50	8	5/8	×	150	*
80	8	3/4	×	150	*
100	12	3/4	×	140	*
150	12	3/4	×	140	*
200	12	7/8	×	150	*
250	16	1	×	170	*
300	16	1-1/8	×	190	*
350	20	1-1/8	×	195	*
400	20	1-1/4	×	210	*
450	24	1-1/4	×	220	*
500	24	1-1/4	×	230	*
600	24	1-1/2	×	260	*

DRAIN POINT Fig. 0B

Run	DN 15-25	Br	DN 15
Run	DN 40	Br	DN 20

	No.
Branch: Table Page 1	1
Cap Threaded	1
Gate Valve Sw	1
Pipe Nipple 50 mm	1
Pipe Nipple Plain/Threaded	1

* DRAIN POINT Fig. 0B

Run	DN 50-600	Br	DN 20

	No.
Branch: Table Page 1	1
Cap Threaded	1
Gate Valve Sw	1
Pipe Nipple Plain/Threaded	1
Pipe Nipple 50 mm	1

* VENT POINT Fig. 1B

Run	DN 15-25	Br	DN 15
Run	DN 40	Br	DN 20

	No.
Branch: Table Page 1	1
Cap Threaded	1
Globe Valve Socket	1
Pipe Nipple 50 mm	1
Pipe Nipple Plain/Threaded	1

* VENT POINT Fig. 1B

Run	DN 50-600	Br	DN 20

	No.
Branch: Table Page 1	1
Cap Threaded	1
Globe Valve Socket	1
Pipe Nipple Plain/Threaded	1
Pipe Nipple 50 mm	1

Class No.: AP04	Page: 1	Content: General
Base Material: Alloy Steel (5 Cr. - 0.5 Mo)	First Issue: Revision:	
Rating: PN 20 (Class 150)	Date:	
Corrosion Allowance: 1 mm	Sign:	

Temperature °C		0	50	100	150	200	250	300	350	400
Pressure Barg	DN 15-80	19.9	19.5	17.6	15.8	13.9	12.0	10.2	8.3	4.6

TABLE OF SCHEDULES

DN	Schedule
15	80
20	80
25	80
40	80
50	40
80	40
100	40
150	40
200	20
250	20
300	20
350	20
400	20
450	20
500	20
600	20

BRANCH CONNECTIONS 90 DEGREES
BRANCH SIZE

Run Size	15	20	25	40	50	80	100	150	200	250	300	350	400	450	500	600
600	C	C	C	C	E	E	E	E	E	E	E	E	E	E	E	A
500	C	C	C	C	D	D	D	D	D	D	D	D	D	D	A	
450	C	C	C	C	E	D	D	D	E	E	E	E	E	A		
400	C	C	C	C	D	D	D	D	D	D	D	D	A			
350	C	C	C	C	D	D	D	D	D	D	D	A				
300	C	C	C	C	D	D	D	D	D	D	A					
250	C	C	C	C	D	D	D	D	D	A						
200	C	C	C	C	D	D	D	D	A							
150	C	C	C	C	D	D	D	A								
100	C	C	C	C	D	D	A									
80	C	C	C	C	D	A										
50	C	C	C	B	A											
40	C	B	B	A												
25	B	B	A													
20	B	A														
15	A															

Notes:

-Design limits are acc. flange rating ANSI B16.5 Material Group 1.13.
- For design temperatures of 400°C, and below application of ASTM A193-B7 bolting material and asbestos filled gaskets is possible.
- For connections class 300, use equivalent class 300 for flange, bolting and gasket selection.
- Application of other types of branch connections is subject to company approval

CODE	EXPLANATION OF CHARACTERS
A	Equal tee
B	Reducing tee
C	Branch fitting outlet socket-weld end
D	Pipe to pipe
E	Branch outlet reducing butt-weld

Class No.: AP04	Page: 2	Content: Material Descriptions

* PIPE

PIPE	Pipe	DN	15-400	ASTM	A 335-P5 (Seamless)
		DN	450-600	ASTM	A691-5CR (Welded)
PNPP	Pipe Nipple 50 mm	DN	15-40	ASTM	A335-P5 (Seamless)

* FLANGES

BLFL	Blind Flange	DN	15-600	ASTM	A182-F5
SBFL	Spectacle Blind Flange	DN	15-600	ASTM	A387-5 CL.2
SPRT	Spacer Ring Type (ANS Flanges)	DN	15-600	ASTM	A387-5 CL.2
WNFL	Welding Neck Flange	DN	15-600	ASTM	A182-F5

* FITTINGS

CAPB	Cap	Butt-Weld. End	DN	15-600	ASTM	A234-WP5
E45B	Elbow 45 Deg.	Butt-Weld. End	DN	15-600	ASTM	A234-WP5
E90B	Elbow 90 Deg.	Butt-Weld. End	DN	15-600	ASTM	A234-WP5
TEEB	Equal Tee	Butt-Weld. End	DN	15-600	ASTM	A234-WP5
E45S	Elbow 45 Deg.	Socket-Weld. End	DN	15-40	ASTM	A182-F5
E90S	Elbow 90 Deg.	Socket-Weld. End	DN	15-40	ASTM	A182-F5
TEES	Equal Tee	Socket-Weld. End	DN	15-40	ASTM	A182-F5
COUS	Coupling	Socket-Weld. End	DN	15-40	ASTM	A182-F5
CAPS	Cap	Socket-Weld. End	DN	15-40	ASTM	A182-F5

* REDUCING FITTINGS

BROS	Branch Fitting Socket-Weld Outlet	DN	15-40	ASTM	A182-F5
BROB	Branch Outlet Red. Butt-Weld.	DN	50-600	ASTM	A182-F5
RECB	Reducer Conc. Butt-Weld. End	DN	20-600	ASTM	A234-WP5
REEB	Reducer Ecc. Butt-Weld. End	DN	20-600	ASTM	A234-WP5
TERB	Tee Reducing Butt-Weld. End	DN	20-25	ASTM	A234-WP5
TERS	Tee Reducing Socket-Weld. End	DN	20-40	ASTM	A182-F5

Note:
- For full material description see relevant MESC buying description.
- Where both socket weld and butt weld fittings are specified, preference is subject to company approval.

* VALVES

CHVF	Check Valve Flanged	DN	15-400	Body:	ASTM	A217-C5, A182-F5
				Trim:	AISI	316, 316L
GAVF	Gate Valve Flanged	DN	15-600	Body:	ASTM	A217-C5, A182-F5
				Trim:	AISI	316, 316L
GLVF	Globe Valve Flanged	DN	15-200	Body:	ASTM	A217-C5, A182-F5
				Trim:	AISI	316, 316L

* MISCELLANEOUS

GKSW	Gasket, Spiral Wound	DN	15-600	AISI 304, Graphite Filled, CS Centring-, AISI 304 Inner-Ring		
ORFS	Orifice Flange Set	DN	50-600		ASTM	A182-F5
STBT	Stud Bolt with Nuts		----	Studs:	ASTM	A193-B16
				Nuts:	ASTM	A194-4

Class No.: AN10	Page: 3	Content: Piping Components

ITEM DESCRIPTION		NOMINAL PIPE SIZE 15	20	25	40	50	80	100	150	200	250	300	350	400	450	500	600
* PIPE																	
Pipe	74.33.31	*	*	*	*	*	*	*	*	*	*	*	*	*			
	74.33.32														*	*	*
* FLANGES																	
Blind Flange	76.64.10	*	*	*	*	*	*	*	*	*	*	*	*	*	*	*	*
Spectacle Blind Flange	76.88.07	*	*	*	*	*	*	*	*	*	*	*	*	*	*	*	*
Spacer Ring Type (ANS Flanges)	76.88.00	*	*	*	*	*	*	*	*	*	*	*	*	*	*	*	*
Welding Neck Flange	76.64.84	*	*	*	*	*	*	*	*	*	*	*	*	*	*	*	*
* FITTINGS																	
Cap Butt-Weld. End	76.32.18	*	*	*	*	*	*	*	*	*	*	*	*	*	*	*	*
Elbow 45 Deg. Butt-Weld. End	76.32.38	*	*	*	*	*	*	*	*	*	*	*	*	*	*	*	*
Elbow 90 Deg. Butt-Weld. End	76.32.39/40	*	*	*	*	*	*	*	*	*	*	*	*	*	*	*	*
Equal Tee Butt-Weld. End	76.32.84	*	*	*	*	*	*	*	*	*	*	*	*	*	*	*	*
Elbow 45 Deg. Socket-Weld. End	76.36.38	*	*	*	*												
Elbow 90 Deg. Socket-Weld. End	76.36.39	*	*	*	*												
Equal Tee Socket-Weld. End	76.36.84	*	*	*	*												
Coupling Socket-Weld. End	76.36.28	*	*	*	*												
Cap Socket-Weld. End	76.36.18	*	*	*	*												
* VALVES																	
Check Valve Flanged	75.39.13	*	*	*	*	*	*	*	*	*	*	*	*	*			
Gate Valve Flanged	75.39.33	*	*	*	*	*	*	*	*	*	*	*	*	*	*	*	*
Globe Valve Flanged	75.39.43	*	*	*	*	*	*	*	*	*							
* MISCELLANEOUS																	
Gasket, Spiral Wound	85.41.33	*	*	*	*	*	*	*	*	*	*	*	*	*	*	*	*
Orifice Flange Set	60.00.00					*	*	*	*	*	*	*	*	*	*	*	*

Class No.: AN09	Page: 4	Content: Reducing Piping Components

Run		Br.	BROB 76.80.00	RECB 76.32.70	REEB 76.32.71	TERB 76.32.85	TERS 76.36.85
20	×	15		*	*	*	*
25	×	15		*	*	*	*
25	×	20		*	*	*	*
40	×	15		*	*		*
40	×	20		*	*		*
40	×	25		*	*		*
50	×	25		*	*		
50	×	40		*	*		
80	×	40		*	*		
80	×	50	*	*	*		
100	×	50	*	*	*		
100	×	80	*	*	*		
150	×	50	*				
150	×	80	*	*	*		
150	×	100	*	*	*		
200	×	50	*				
200	×	80	*				
200	×	100	*	*	*		
200	×	150	*	*	*		
250	×	50	*				
250	×	80	*				
250	×	100	*				
250	×	150	*	*	*		
250	×	200	*	*	*		
300	×	50	*				
300	×	80	*				
300	×	100	*				
300	×	150	*	*	*		
300	×	200	*	*	*		
300	×	250	*	*	*		
350	×	50	*				
350	×	80	*				
350	×	100	*				
350	×	150	*				
350	×	200	*	*	*		
350	×	250	*	*	*		
350	×	300	*	*	*		

Run		Br.	BROB 76.80.00	RECB 76.32.70	REEB 76.32.71	TERB 76.32.85
400	×	50	*			
400	×	80	*			
400	×	100	*			
400	×	150	*			
400	×	200	*	*	*	*
400	×	250	*	*	*	*
400	×	300	*	*	*	*
400	×	350	*	*	*	*
450	×	50	*			
450	×	80	*			
450	×	100	*			
450	×	150	*			
450	×	200	*			
450	×	250	*	*	*	
450	×	300	*	*	*	
450	×	350	*	*	*	
450	×	400	*	*	*	
500	×	50	*			
500	×	80	*			
500	×	100	*			
500	×	150	*			
500	×	200	*			
500	×	250	*			
500	×	300	*	*	*	
500	×	350	*	*	*	
500	×	400	*	*	*	
500	×	450	*	*	*	*
600	×	50	*			
600	×	80	*			
600	×	100	*			
600	×	150	*			
600	×	200	*			
600	×	250	*			
600	×	300	*			
600	×	350	*		*	
600	×	400	*	*	*	
600	×	450	*	*	*	*
600	×	500	*	*		*

COMP. NAME	DESCRIPTION
BROS	Branch Fitting Outlet Socket-Weld. End
BROB	Branch Outlet Red. Butt-Weld
RECB	Reducer Conc. Butt-Weld. End
REEB	Reducer Ecc. Butt-Weld. End
TERB	Tee Reducing Butt-Weld. End
TERS	Tee Reducing Socket-Weld. End

RUN	Br.	BROS 76.80.26
40-150	15	*
200-600		*
50-80	20	*
100-600		*
50	25	*
80-100		*
150-600		*
80-100	40	*
150-300		*
350-600		*

Class No.: AN06	Page: 5	Content: Bolting and Assemblies

BOLT SET FLANGED JOINTS

DN	No.	Inch		mm	81.38.96
15	4	1/2	×	60	*
20	4	1/2	×	65	*
25	4	1/2	×	70	*
40	4	1/2	×	75	*
50	4	5/8	×	80	*
80	4	5/8	×	95	*
100	8	5/8	×	95	*
150	8	3/4	×	100	*
200	8	3/4	×	110	*
250	12	7/8	×	120	*
300	12	7/8	×	120	*
350	12	1	×	130	*
400	16	1	×	140	*
450	16	1-1/8	×	150	*
500	20	1-1/8	×	160	*
600	20	1-1/4	×	180	*

BOLT SET SPECTACLE/SPACER

DN	No.	Inch		mm	81.38.96
15	4	1/2	×	70	*
20	4	1/2	×	70	*
25	4	1/2	×	80	*
40	4	1/2	×	80	*
50	4	5/8	×	90	*
80	4	5/8	×	110	*
100	8	5/8	×	110	*
150	8	3/4	×	120	*
200	8	3/4	×	125	*
250	12	7/8	×	140	*
300	12	7/8	×	145	*
350	12	1	×	160	*
400	16	1	×	170	*
450	16	1-1/8	×	180	*
500	20	1-1/8	×	195	*
600	20	1-1/4	×	215	*

BOLT SET ORIFICE FLANGES

DN	No.	Inch		mm	81.38.96
15	4	5/8	×	120	*
20	4	5/8	×	120	*
25	4	5/8	×	120	*
40	4	¾	×	130	*
50	8	5/8	×	150	*
80	8	¾	×	150	*
100	12	¾	×	140	*
150	12	¾	×	140	*
200	12	7/8	×	150	*
250	16	1	×	170	*
300	16	1-1/8	×	190	*
350	20	1-1/8	×	195	*
400	20	1-1/4	×	210	*
450	24	1-1/4	×	220	*
500	24	1-1/4	×	230	*
600	24	1-1/2	×	260	*

DRAIN POINT	Fig. 0I		
Run DN 15-25	Br	DN 15	
Run DN 40	Br	DN 20	No.
Branch: Table Page 1			1
Blind Flange			1
Gasket Spiral Wound			2
Gate Valve Flanged			1
Stud Bolt with Nuts			8
Welding Neck Flange			1

* DRAIN POINT	Fig. 0J		
Run DN 50-600	Br	DN 20	NO.
Branch: Table Page 1			1
Blind Flange			1
Gasket Spiral Wound			2
Gate Valve Flanged			1
Pipe Nipple 50 mm			1
Stud Bolt with Nuts			8
Welding Neck Flange			1

* VENT POINT	Fig. 1I		
Run DN 15-25	Br	DN 15	
Run DN 40	Br	DN 20	NO.
Branch: Table Page 1			1
Blind Flange			1
Gasket Spiral Wound			2
Globe Valve Flanged			1
Stud Bolt with Nuts			8
Welding Neck Flange			1

* VENT POINT	Fig. 1J		
Run DN 50-600	Br	DN 20	NO.
Branch: Table Page 1			1
Blind Flange			1
Gasket Spiral Wound			2
Globe Valve Flanged			1
Pipe Nipple 50 mm			1
Stud Bolt with Nuts			8
Welding Neck Flange			1

Class No.: AS02	Page: 1	Content: General
Base Material: Stainless Steel AISI 316	First Issue: Revision:	
Rating: PN 20 (Class 150)	Date:	
Corrosion Allowance: 0 mm	Sign:	

Temperature °C		0	50	100	150	200	250	300	350	400
Pressure Barg	DN 15-600	18.9	18.4	16.3	14.7	13.5	12.0	10.2	8.3	6.5

TABLE OF SCHEDULES

DN	Schedule
15	40S
20	40S
25	10S
40	10S
50	10S
80	10S
100	10S
150	10S
200	10S
250	10S
300	10S
350	10S
400	10S
450	10S
500	10S

BRANCH CONNECTIONS 90 DEGREES
BRANCH SIZE

Run Size	15	20	25	40	50	80	100	150	200	250	300	350	400	450	500
500	C	C	C	C	E	E	E	E	E	E	E	E	E	E	A
450	C	C	C	C	E	E	E	E	E	E	E	E	E	A	
400	C	C	C	C	E	E	E	E	E	E	E	E	A		
350	C	C	C	C	E	E	E	E	E	E	E	A			
300	C	C	C	C	E	E	E	E	E	E	A				
250	C	C	C	C	E	E	E	E	E	A					
200	C	C	C	C	D	D	E	E	A						
150	C	C	C	C	D	D	D	A							
100	C	C	C	C	D	D	A								
80	C	C	C	C	D	A									
50	C	C	C	B	A										
40	C	B	B	A											
25	B	B	A												
20	B	A													
15	A														

Notes:

-Design limits are acc. flange rating ANSI B16.5 Material Group 2.2
- Blind flanges to be provided with liner.
- For economic reasons use lap-joint flanges from DN 15 up to DN 200.
- Spectacle blinds to be installed between welding neck flanges.
- Application of other types of branch connections is subject to company approva
- For connections class 300, use equivalent class 300 for flange, bolting and gasket selection.

CODE	EXPLANATION OF CHARACTERS
A	Equal tee
B	Reducing tee
C	Branch fitting outlet socket-weld end
D	Pipe to pipe
E	Branch outlet reducing butt-weld

Class No.: AS02	Page: 2	Content: Material Descriptions

* PIPE

PIPE	Pipe	DN	15-300	ASTM	A312-TP316L (Seamless or Welded)
		DN	350-500	ASTM	A358-Gr. 316L (Welded)

* FLANGES

BLFL	Blind Flange	DN	15-500	ASTM	A182-F316
LJFL	Lap-Joint Flange	DN	15-200	ASTM	A105
SBFL	Spectacle Blind Flange	DN	15-500	ASTM	A240-TP316
SPRT	Spacer Ring Type (ANS Flanges)	DN	15-500	ASTM	A240-TP316
WNFL	Welding Neck Flange	DN	15-500	ASTM	A182-F316

* FITTINGS

CAPB	Cap	Butt-Weld. End	DN	15-500	ASTM	A403-WP316L
E45B	Elbow 45 Deg.	Butt-Weld. End	DN	15-500	ASTM	A403-WP316L
E90B	Elbow 90 Deg.	Butt-Weld. End	DN	15-500	ASTM	A403-WP316L
STBE	Stub-End		DN	15-200	ASTM	A403-316L
TEEB	Equal Tee	Butt-Weld. End	DN	15-500	ASTM	A403-WP316L
E45S	Elbow 45 Deg.	Socket-Weld. End	DN	15-40	ASTM	A182-F316
E90S	Elbow 90 Deg.	Socket-Weld. End	DN	15-40	ASTM	A182-F3165
TEES	Equal Tee	Socket-Weld. End	DN	15-40	ASTM	A182-F316
COUS	Coupling	Socket-Weld. End	DN	15-40	ASTM	A182-F316
CAPS	Cap	Socket-Weld. End	DN	15-40	ASTM	A182-F316

* REDUCING FITTINGS

BROS	Branch Fitting Socket-Weld. Outlet	DN	15-40	ASTM	A182-316
BROB	Branch Outlet Red. Butt-Weld.	DN	50-450	ASTM	A182-316
RECB	Reducer Conc. Butt-Weld. End	DN	20-500	ASTM	A403-316L
REEB	Reducer Ecc. Butt-Weld. End	DN	20-500	ASTM	A403-316L
TERB	Tee Reducing Butt-Weld. End	DN	20-500	ASTM	A403-316L
TERS	Tee Reducing Socket-Weld. End	DN	20-40	ASTM	A182-F316

Note:
- For full material description see relevant MESC buying description.
- Where both socket weld and butt weld fittings are specified, preference is subject to company approval.

* VALVES

CHVF	Check Valve Flanged	DN	15-400	Body:	ASTM	A351-CF8M, A182-F316
				Trim:	AISI	316, 316L
GAVF	Gate Valve Flanged	DN	15-500	Body:	ASTM	A351-CF8M, A182-F316
				Trim:	AISI	316, 316L
GLVF	Globe Valve Flanged	DN	15-200	Body:	ASTM	A351-CF8M, A182-F316
				Trim:	AISI	316, 316L

* MISCELLANEOUS

GKTI	Gasket, C.A.F	DN	15-500	C.A.F		
ORFS	Orifice Flange Set	DN	50-500		ASTM	A182-F316
STBT	Stud Bolt with Nuts		----	Studs:	ASTM	A193-B7
				Nuts:	ASTM	A194-2H

Class No.: AS02	Page: 3	Content: Piping Components

ITEM DESCRIPTION			NOMINAL PIPE SIZE 15	20	25	40	50	80	100	150	200	250	300	350	400	450	500
* PIPE																	
Pipe		74.36.40	*	*	*	*	*	*	*	*	*	*	*				
		74.36.00												*	*	*	*
* FLANGES																	
Blind Flange		76.65.10	*	*	*	*	*	*	*	*	*	*	*	*	*	*	*
Lap-Joint Flanged		76.62.20	*	*	*	*	*	*	*	*	*						
Spectacle Blind Flange		76.88.10	*	*	*	*	*	*	*	*	*	*	*	*	*	*	*
Spacer Ring Type (ANS Flanges)		76.88.00	*	*	*	*	*	*	*	*	*	*	*	*	*	*	*
Welding Neck Flange		76.65.80	*	*	*	*	*	*	*	*	*	*	*	*	*	*	*
* FITTINGS																	
Cap	Butt-Weld. End	76.33.18	*	*	*	*	*	*	*	*	*	*	*	*	*	*	*
Elbow 45 Deg.	Butt-Weld. End	76.33.38	*	*	*	*	*	*	*	*	*	*	*	*	*	*	*
Elbow 90 Deg.	Butt-Weld. End	76.33.40	*	*	*	*	*	*	*	*	*	*	*	*	*	*	*
Stub-End		76.33.53	*	*	*	*	*	*	*	*	*						
Equal Tee	Butt-Weld. End	76.33.84	*	*	*	*	*	*	*	*	*	*	*	*	*	*	*
Elbow 45 Deg.	Socket-Weld. End	76.37.38	*	*	*	*											
Elbow 90 Deg.	Socket-Weld. End	76.37.39	*	*	*	*											
Equal Tee	Socket-Weld. End	76.37.84	*	*	*	*											
Coupling	Socket-Weld. End	76.37.28	*	*	*	*											
Cap	Socket-Weld. End	76.37.18	*	*	*	*											
* VALVES																	
Check Valve Flanged		75.40.13	*	*	*	*	*	*	*	*	*	*	*	*	*		
Gate Valve Flanged		75.40.33	*	*	*	*	*	*	*	*	*	*	*	*	*	*	*
Globe Valve Flanged		75.40.40	*	*	*	*	*	*	*	*	*						
* MISCELLANEOUS																	
Gasket, RF C.A.F.		85.31.16/17	*	*	*	*	*	*	*	*	*	*	*	*	*	*	*
Orifice Flange Set		60.00.00					*	*	*	*	*	*	*	*	*	*	*

Class No.: AS02	Page: 4	Content: Reducing Piping Components

Run	Br.	BROB 76.00.00	RECB 76.33.70	REEB 76.33.73	TERB 76.33.85	TERS 76.37.85
20 ×	15		*	*	*	*
25 ×	15		*	*	*	*
25 ×	20		*	*	*	*
40 ×	15				*	*
40 ×	20		*	*	*	*
40 ×	25		*	*	*	*
50 ×	20				*	
50 ×	25		*	*	*	
50 ×	40		*	*	*	
80 ×	40		*	*	*	
80 ×	50	*	*	*	*	
100 ×	40				*	
100 ×	50	*	*	*	*	
100 ×	80	*	*	*	*	
150 ×	50	*				
150 ×	80	*	*	*	*	
150 ×	100	*	*	*	*	
200 ×	50	*				
200 ×	80	*				
200 ×	100	*	*	*	*	
200 ×	150	*	*	*	*	
250 ×	50	*				
250 ×	80	*				
250 ×	100	*			*	
250 ×	150	*	*	*	*	
250 ×	200	*	*	*	*	
300 ×	50	*				
300 ×	80	*				
300 ×	100	*				
300 ×	150	*	*	*	*	
300 ×	200	*	*	*	*	
300 ×	250	*	*	*	*	
350 ×	50	*				
350 ×	80	*				
350 ×	100	*				
350 ×	150	*			*	
350 ×	200	*	*	*	*	
350 ×	250	*	*	*	*	
350 ×	300	*	*	*	*	

Run	Br.	BROB 76.00.00	RECB 76.33.70	REEB 76.33.73	TERB 76.33.85
400 ×	50	*			
400 ×	80	*			
400 ×	100	*			
400 ×	150	*			*
400 ×	200	*	*	*	*
400 ×	250	*	*	*	*
400 ×	300	*	*	*	*
400 ×	350	*	*	*	*
450 ×	50	*			
450 ×	80	*			
450 ×	100	*			
450 ×	150	*			
450 ×	200	*			
450 ×	250	*	*	*	
450 ×	300	*	*	*	
450 ×	350	*	*	*	
450 ×	400	*	*	*	
500 ×	50				
500 ×	80				
500 ×	100				
500 ×	150				
500 ×	200			*	
500 ×	250			*	
500 ×	300	*	*	*	
500 ×	350	*		*	
500 ×	400	*	*	*	
500 ×	450	*	*	*	

COMP. NAME	DESCRIPTION
BROS	**Branch Fitting Outlet Socket-Weld. End**
BROB	Branch Outlet Red. Butt-Weld
RECB	Reducer Conc. Butt-Weld. End
REEB	Reducer Ecc. Butt-Weld. End
TERB	Tee Reducing Butt-Weld. End
TERS	Tee Reducing Socket-Weld. End

RUN	Br.	BROS 76.80.26
40-150	15	*
200-500		*
50-80	20	*
100-500		*
50	25	*
80-100		*
150-500		*
80-100	40	*
150-300		*
350-500		*

Class No.: AS02	Page: 5	Content: Bolting and Assemblies

BOLT SET FLANGED JOINTS

DN	No.	Inch		mm	81.38.61
15	4	1/2	×	60	*
20	4	1/2	×	65	*
25	4	1/2	×	70	*
40	4	1/2	×	75	*
50	4	5/8	×	80	*
80	4	5/8	×	95	*
100	8	5/8	×	95	*
150	8	3/4	×	100	*
200	8	3/4	×	110	*
250	12	7/8	×	120	*
300	12	7/8	×	120	*
350	12	1	×	130	*
400	16	1	×	140	*
450	16	1-1/8	×	150	*
500	20	1-1/8	×	160	*

BOLT SET SPECTACLE/SPACER

DN	No.	Inch		mm	81.38.61
15	4	1/2	×	70	*
20	4	1/2	×	70	*
25	4	1/2	×	80	*
40	4	1/2	×	80	*
50	4	5/8	×	90	*
80	4	5/8	×	110	*
100	8	5/8	×	110	*
150	8	3/4	×	120	*
200	8	3/4	×	125	*
250	12	7/8	×	140	*
300	12	7/8	×	145	*
350	12	1	×	160	*
400	16	1	×	170	*
450	16	1-1/8	×	180	*
500	20	1-1/8	×	195	*

BOLT SET ORIFICE FLANGES

DN	No.	Inch		mm	81.38.61
15	4	5/8	×	120	*
20	4	5/8	×	120	*
25	4	5/8	×	120	*
40	4	¾	×	130	*
50	8	5/8	×	150	*
80	8	¾	×	150	*
100	12	¾	×	140	*
150	12	¾	×	140	*
200	12	7/8	×	150	*
250	16	1	×	170	*
300	16	1-1/8	×	190	*
350	20	1-1/8	×	195	*
400	20	1-1/4	×	210	*
450	24	1-1/4	×	220	*
500	24	1-1/4	×	230	*

DRAIN POINT Fig. 0V

Run	DN 15-25	Br	DN 15	
Run	DN 40	Br	DN 20	No.
Branch: Table Page 1				1
Blind Flange				1
Blind Flange Liner				1
Gasket RF. C.A.F.				2
Gate Valve Flanged				1
Lap-Joint Flange				1
Stub-End				1
Stud Bolt with Nuts				4

* DRAIN POINT Fig. 0R

Run	DN 50-500	Br	DN 20	No.
Branch: BROB				1
Blind Flange				1
Blind Flange Liner				1
Gasket RF. C.A.F.				2
Gate Valve Flanged				1
Stud Bolt with Nuts				8
Welding Neck Flange				1

* VENT POINT Fig. 1V

Run	DN 15-25	Br	DN 15	
Run	DN 40	Br	DN 20	No.
Branch: Table Page 1				1
Blind Flange				1
Blind Flange Liner				1
Gasket RF. C.A.F.				2
Globe Valve Flanged				1
Lap-Joint Flange				1
Stub-End				1
Stud Bolt with Nuts				4

* VENT POINT Fig. 1R

Run	DN 50-500	Br	DN 20	No.
Branch: BROB				1
Blind Flange				1
Blind Flange Liner				1
Gasket RF. C.A.F.				2
Globe Valve Flanged				1
Stud Bolt with Nuts				8
Welding Neck Flange				1

Class No.: AS04	Page: 1	Content: General

Base Material: Stainless Steel AISI 304, LT	First Issue:	Revision:	
Rating: PN 20 (Class 150)		Date:	
Corrosion Allowance: 0 mm		Sign:	

Temperature °C		-200	0	50	100	150
Pressure Barg	DN 15-600	18.9	18.9	18.3	15.9	14.1

TABLE OF SCHEDULES

DN	Schedule
15	40S
20	40S
25	10S
40	10S
50	10S
80	10S
100	10S
150	10S
200	10S
250	10S
300	10S
350	10S
400	10S
450	10S
500	10S
600	10S

BRANCH CONNECTIONS 90 DEGREES
BRANCH SIZE

Run Size	15	20	25	40	50	80	100	150	200	250	300	350	400	450	500	600
600	C	C	C	C	E	E	E	E	E	E	E	E	E	E	E	A
500	C	C	C	C	E	E	E	E	E	E	E	E	E	E	A	
450	C	C	C	C	E	E	E	E	E	E	E	E	E	A		
400	C	C	C	C	E	E	E	E	E	E	E	E	A			
350	C	C	C	C	E	E	E	E	E	E	E	A				
300	C	C	C	C	D	E	E	E	E	E	A					
250	C	C	C	C	D	D	D	D	D	A						
200	C	C	C	C	D	D	D	D	A							
150	C	C	C	C	D	D	D	A								
100	C	C	C	C	D	D	A									
80	C	C	C	C	D	A										
50	C	C	C	B	A											
40	C	B	B	A												
25	B	B	A													
20	B	A														
15	A															

Notes:

-Design limits are acc. flange rating ANSI B16.5 Material Group 2.1.
- Application of other types of branch connections is subject to company approval
- For connections class 300, use equivalent class 300 for flange, bolting and gasket selection

CODE	EXPLANATION OF CHARACTERS
A	Equal tee
B	Reducing tee
C	Branch fitting outlet socket-weld end
D	Pipe to pipe
E	Branch outlet reducing butt-weld

* PIPE

PIPE	Pipe	DN	15-300	ASTM	A312-TP304 (Seamless or Welded)
		DN	350-600	ASTM	A358-Gr. 304 (Welded)
PNPP	Pipe Nipple 50 mm	DN	15-40	ASTM	A312-TP304 (Seamless)

* FLANGES

BLFL	Blind Flange	DN	15-600	ASTM	A182-F304
SBFL	Spectacle Blind Flange	DN	15-600	ASTM	A240-TP304
SPRT	Spacer Ring Type (ANS Flanges)	DN	15-600	ASTM	A240-TP304
WNFL	Welding Neck Flange	DN	15-600	ASTM	A182-F304

* FITTINGS

CAPB	Cap	Butt-Weld. End	DN	15-600	ASTM	A403-WP304
E45B	Elbow 45 Deg.	Butt-Weld. End	DN	15-600	ASTM	A403-WP304
E90B	Elbow 90 Deg.	Butt-Weld. End	DN	15-600	ASTM	A403-WP304
TEEB	Equal Tee	Butt-Weld. End	DN	15-600	ASTM	A403-WP304
E45S	Elbow 45 Deg.	Socket-Weld. End	DN	15-40	ASTM	A182-F304
E90S	Elbow 90 Deg.	Socket-Weld. End	DN	15-40	ASTM	A182-F304
TEES	Equal Tee	Socket-Weld. End	DN	15-40	ASTM	A182-F304
COUS	Coupling	Socket-Weld. End	DN	15-40	ASTM	A182-F304
CAPS	Cap	Socket-Weld. End	DN	15-40	ASTM	A182-F304

* REDUCING FITTINGS

BROS	Branch Fitting Socket-Weld Outlet	DN	15-40	ASTM	A182-F304
BROB	Branch Outlet Red. Butt-Weld.	DN	50-600	ASTM	A182-F304
RECB	Reducer Conc. Butt-Weld. End	DN	20-600	ASTM	A403-WP304
REEB	Reducer Ecc. Butt-Weld. End	DN	20-600	ASTM	A403-WP304
TERB	Tee Reducing Butt-Weld. End	DN	20-50	ASTM	A403-WP304
TERS	Tee Reducing Socket-Weld. End	DN	20-40	ASTM	A182-F304

Note:
- For full material description see relevant MESC buying description.
- Where both socket weld and butt weld fittings are specified, preference is subject to company approval.

* VALVES

BARF	Ball Valve Red. Bore Flanged	DN 15-250	Body:	A351-CF8M, A182-F316	
			Ball/Stem:	AISI 316, 316L	
			Seats:	PTFE	
CHVF	Check Valve Flanged	DN 15-400	Body:	ASTM	A351-CF8M, A182-F316
			Trim:	AISI	316, 316L
GAVF	Gate Valve Flanged	DN 15-600	Body:	ASTM	A351-CF8M, A182-F316
			Trim:	AISI	316, 316L
GLVF	Globe Valve Flanged	DN 15-200	Body:	ASTM	A351-CF8M, A182-F316
			Trim:	AISI	316, 316L

* MISCELLANEOUS

GKTI	Gasket, C.A.F	DN15-600	C.A.F		
ORFS	Orifice Flange Set	DN50-600		ASTM	A182-F304
STBT	Stud Bolt with Nuts		Bolts (Dia. > 1 ½")	ASTM A193 B8M2,	
			Nuts:	A194 Gr. 8M	
			Studs:	ASTM	A193-B8
			Nuts:	ASTM	A194-8

Class No.: AS04	Page: 3	Content: Piping Components

ITEM DESCRIPTION			NOMINAL PIPE SIZE 15	20	25	40	50	80	100	150	200	250	300	350	400	450	500	600
* PIPE																		
Pipe		74.36.10	*	*	*	*	*	*	*	*	*	*	*					
		74.36.00												*	*	*	*	*
* FLANGES																		
Blind Flange		76.65.10	*	*	*	*	*	*	*	*	*	*	*	*	*	*	*	*
Spectacle Blind Flange		76.88.09	*	*	*	*	*	*	*	*	*	*	*	*	*	*	*	*
Spacer Ring Type (ANS Flanges)		76.88.00	*	*	*	*	*	*	*	*	*	*	*	*	*	*	*	*
Welding Neck Flange		76.65.80	*	*	*	*	*	*	*	*	*	*	*	*	*	*	*	*
* FITTINGS																		
Cap	Butt-Weld. End	76.33.18	*	*	*	*	*	*	*	*	*	*	*	*	*	*	*	*
Elbow 45 Deg.	Butt-Weld. End	76.33.38	*	*	*	*	*	*	*	*	*	*	*	*	*	*	*	*
Elbow 90 Deg.	Butt-Weld. End	76.33.40	*	*	*	*	*	*	*	*	*	*	*	*	*	*	*	*
Equal Tee	Butt-Weld. End	76.33.84	*	*	*	*	*	*	*	*	*	*	*	*	*	*	*	*
Elbow 45 Deg.	Socket-Weld. End	76.37.38	*	*	*	*												
Elbow 90 Deg.	Socket-Weld. End	76.37.39	*	*	*	*												
Equal Tee	Socket-Weld. End	76.37.84	*	*	*	*												
Coupling	Socket-Weld. End	76.37.28	*	*	*	*												
Cap	Socket-Weld. End	76.37.18	*	*	*	*												
* VALVES																		
Ball Valve Red. Bore Flanged		75.40.08	*	*	*	*	*	*	*	*	*	*						
Check Valve Flanged		75.40.13	*	*	*	*	*	*	*	*	*	*	*	*	*			
Gate Valve Flanged		75.40.33	*	*	*	*	*	*	*	*	*	*	*	*	*	*	*	*
Globe Valve Flanged		75.40.40	*	*	*	*	*	*	*	*	*							
* MISCELLANEOUS																		
Gasket, RF C.A.F.		85.31.16/17	*	*	*	*	*	*	*	*	*	*	*	*	*	*	*	*
Orifice Flange Set		60.00.00					*	*	*	*	*	*	*	*	*	*	*	*

Class No.: AS04	Page: 4	Content: Reducing Piping Components

Run	Br.	BROB 76.00.00	RECB 76.33.70	REEB 76.33.73	TERB 76.33.85	TERS 76.37.8
20 ×	15		*	*	*	*
25 ×	15		*	*	*	*
25 ×	20		*	*		*
40 ×	20		*	*	*	*
40 ×	25		*	*	*	*
50 ×	25		*	*		
50 ×	40		*	*	*	
80 ×	40		*	*		
80 ×	50	*	*	*		
100 ×	50	*	*	*		
100 ×	80	*	*	*		
150 ×	50	*				
150 ×	80	*	*	*		
150 ×	100	*	*	*		
200 ×	50	*				
200 ×	80	*				
200 ×	100	*	*	*		
200 ×	150	*	*	*		
250 ×	50	*				
250 ×	80	*				
250 ×	100	*				
250 ×	150	*	*	*		
250 ×	200	*	*	*		
300 ×	50	*				
300 ×	80	*				
300 ×	100	*				
300 ×	150	*	*	*		
300 ×	200	*	*	*		
300 ×	250	*	*	*		
350 ×	50	*				
350 ×	80	*				
350 ×	100	*				
350 ×	150	*				
350 ×	200	*				
350 ×	250	*	*	*		
350 ×	300	*	*	*		

Run	Br.	BROB 76.00.00	RECB 76.33.70	REEB 76.33.73
400 ×	50	*		
400 ×	80	*		
400 ×	100	*		
400 ×	150	*		
400 ×	200	*	*	*
400 ×	250	*		
400 ×	300	*	*	*
400 ×	350	*	*	*
450 ×	50	*		
450 ×	80	*		
450 ×	100	*		
450 ×	150	*		
450 ×	200	*		
450 ×	250	*	*	*
450 ×	300	*	*	*
450 ×	350	*	*	*
450 ×	400	*	*	*
500 ×	50	*		
500 ×	80	*		
500 ×	100	*		
500 ×	150	*		
500 ×	200	*		
500 ×	250	*		
500 ×	300	*	*	*
500 ×	350	*	*	*
500 ×	400	*	*	*
500 ×	450	*	*	*
600 ×	50	*		
600 ×	80	*		
600 ×	100	*		
600 ×	150	*		
600 ×	200	*		
600 ×	250	*		
600 ×	300	*		
600 ×	350	*		
600 ×	400	*		
600 ×	450	*	*	*
600 ×	500	*	*	*

COMP. NAME	DESCRIPTION
BROS	Branch Fitting Outlet Socket-Weld. End
BROB	Branch Outlet Red. Butt-Weld
RECB	Reducer Conc. Butt-Weld. End
REEB	Reducer Ecc. Butt-Weld. End
TERB	Tee Reducing Butt-Weld. End
TERS	Tee Reducing Socket-Weld. End

RUN	Br.	BROS 76.80.2
40-150	15	*
200-600		*
50-80	20	*
100-600		*
50	25	*
80-100		*
150-600		*
80-100	40	*
150-300		*
350-600		*

Class No.: AS04	Page: 5	Content: Bolting and Assemblies

BOLT SET FLANGED JOINTS

DN	No.	Inch	mm	81.38.43/44	
15	4	1/2	×	60	*
20	4	1/2	×	65	*
25	4	1/2	×	70	*
40	4	1/2	×	75	*
50	4	5/8	×	80	*
80	4	5/8	×	95	*
100	8	5/8	×	95	*
150	8	3/4	×	100	*
200	8	3/4	×	110	*
250	12	7/8	×	120	*
300	12	7/8	×	120	*
350	12	1	×	130	*
400	16	1	×	140	*
450	16	1-1/8	×	150	*
500	20	1-1/8	×	160	*
600	20	1-1/4	×	180	*

BOLT SET SPECTACLE/SPACER

DN	No.	Inch	mm	81.38.43/44	
15	4	1/2	×	70	*
20	4	1/2	×	70	*
25	4	1/2	×	80	*
40	4	1/2	×	80	*
50	4	5/8	×	90	*
80	4	5/8	×	110	*
100	8	5/8	×	110	*
150	8	3/4	×	120	*
200	8	3/4	×	125	*
250	12	7/8	×	140	*
300	12	7/8	×	145	*
350	12	1	×	160	*
400	16	1	×	170	*
450	16	1-1/8	×	180	*
500	20	1-1/8	×	195	*
600	20	1-1/4	×	215	*

BOLT SET ORIFICE FLANGES

DN	No.	Inch		mm	81.38.43/44
15	4	5/8	×	120	*
20	4	5/8	×	120	*
25	4	5/8	×	120	*
40	4	¾	×	130	*
50	8	5/8	×	150	*
80	8	¾	×	150	*
100	12	¾	×	140	*
150	12	¾	×	140	*
200	12	7/8	×	150	*
250	16	1	×	170	*
300	16	1-1/8	×	190	*
350	20	1-1/8	×	195	*
400	20	1-1/4	×	210	*
450	24	1-1/4	×	220	*
500	24	1-1/4	×	230	*
600	24	1-½	×	260	*

DRAIN POINT Fig. 2J

Run	DN 15-25	Br	DN 15	
Run	DN 40	Br	DN 20	NO.
Branch: Table Page 1				1
Ball Valve Red. Bore Flanged				1
Blind Flange				1
Gasket RF. C.A.F.				2
Pipe Nipple 50 mm				1
Stud Bolt with Nuts				8
Welding Neck Flange				1

* DRAIN POINT Fig. 2J

Run	DN 50-600	Br	DN 20	No.
Branch: Table Page 1				1
Ball Valve Red. Bore Flanged				1
Blind Flange				1
Gasket RF. C.A.F.				2
Pipe Nipple 50 mm				1
Stud Bolt with Nuts				8
Welding Neck Flange				1

* VENT POINT Fig. 1J

Run	DN 15-25	Br	DN 15	
Run	DN 40	Br	DN 20	No.
Branch: Table Page 1				1
Blind Flange				1
Gasket RF. C.A.F.				2
Globe Valve Socket				1
Pipe Nipple 50 mm				1
Stud Bolt with Nuts				8
Welding Neck Flange				1

* VENT POINT Fig. 1J

Run	DN 50-600	Br	DN 20	No.
Branch: Table Page 1				1
Blind Flange				1
Gasket RF. C.A.F.				2
Globe Valve Socket				1
Pipe Nipple 50 mm				1
Stud Bolt with Nuts				8
Welding Neck Flange				1

Class No.: AS05	Page: 1	Content: General
Base Material: Stainless Steel AISI 321/347	First Issue: Revision:	
Rating: PN 20 (Class 150)	Date:	
Corrosion Allowance: 0 mm	Sign:	

Temperature °C		0	50	75	100	125	150	175	200
Pressure Barg	DN 15-80	18.9	18.4	17.3	16.3	15.5	14.7	14.1	11.0
	DN 100-150	18.9	18.4	17.3	16.3	15.5	14.7	14.1	9.0
	DN 200-600	18.9	18.4	17.3	16.3	15.5	14.7	12.0	7.0

TABLE OF SCHEDULES

DN	Schedule
15	40S
20	40S
25	10S
40	10S
50	10S
80	10S
100	10S
150	10S
200	10S
250	10S
300	10S
350	10S
400	10S
450	10S
500	10S
600	10S

BRANCH CONNECTIONS 90 DEGREES
BRANCH SIZE

Run Size	15	20	25	40	50	80	100	150	200	250	300	350	400	450	500	600
600	C	C	C	C	E	E	E	E	E	E	E	E	E	E	E	A
500	C	C	C	C	E	E	E	E	E	E	E	E	E	E	A	
450	C	C	C	C	E	E	E	E	E	E	E	E	E	A		
400	C	C	C	C	E	E	E	E	E	E	E	E	A			
350	C	C	C	C	E	E	E	E	E	E	E	A				
300	C	C	C	C	E	E	E	E	E	E	A					
250	C	C	C	C	E	E	E	E	E	A						
200	C	C	C	C	D	D	E	E	A							
150	C	C	C	C	D	D	D	A								
100	C	C	C	C	D	D	A									
80	C	C	C	C	D	A										
50	C	C	C	B	A											
40	C	B	B	A												
25	B	B	A													
20	B	A														
15	A															

Notes:
- For connections class 300, use equivalent class 300 for flange, bolting and gasket selection
- Blind flanges to be provided with liner
- For economic reasons use lap-joint flanges from DN 15 to DN 200
- Spectacle blinds to be installed between welding neck flanges.
- Application of other types of branch connections is subject to company approval.
- For connections class 300, use equivalent class 300 for flange, bolting and gasket selection

CODE	EXPLANATION OF CHARACTERS
A	Equal tee
B	Reducing tee
C	Branch fitting outlet socket-weld end
D	Pipe to pipe
E	Branch outlet reducing butt-weld

Class No.: AS05	Page: 2	Content: Material Descriptions

* PIPE

PIPE	Pipe	DN	15-300	ASTM	A312-TP316L (Seamless or Welded)
		DN	350-600	ASTM	A358-Gr. 316L (Welded)

* FLANGES

BLFL	Blind Flange	DN	15-600	ASTM	A105
FLIN	Blind Flange Liner	DN	15-600	ASTM	A240-TP316
LJFL	Lap-Joint Flange	DN	15-200	ASTM	A105
SBFL	Spectacle Blind Flange	DN	15-600	ASTM	A240-TP316
SPRT	Spacer Ring Type (ANS Flanges)	DN	15-600	ASTM	A240-TP316
WNFL	Welding Neck Flange	DN	15-600	ASTM	A182-F316

* FITTINGS

CAPB	Cap	Butt-Weld. End	DN	15-600	ASTM	A403-WP316L
E45B	Elbow 45 Deg.	Butt-Weld. End	DN	15-600	ASTM	A403-WP316L
E90B	Elbow 90 Deg.	Butt-Weld. End	DN	15-600	ASTM	A403-WP316L
STBE	Stub-End		DN	15-200	ASTM	A403-WP316L
TEEB	Equal Tee	Butt-Weld. End	DN	15-600	ASTM	A403-WP316L
E45S	Elbow 45 Deg.	Socket-Weld. End	DN	15-40	ASTM	A182-F316
E90S	Elbow 90 Deg.	Socket-Weld. End	DN	15-40	ASTM	A182-F316
TEES	Equal Tee	Socket-Weld. End	DN	15-40	ASTM	A182-F316
COUS	Coupling	Socket-Weld. End	DN	15-40	ASTM	A182-F316
CAPS	Cap	Socket-Weld. End	DN	15-40	ASTM	A182-F316

* REDUCING FITTINGS

BROS	Branch Fitting Socket-Weld Outlet	DN	15-40	ASTM	A182-F316
BROB	Branch Outlet Red. Butt-Weld.	DN	50-500	ASTM	A182-F316
RECB	Reducer Conc. Butt-Weld. End	DN	20-600	ASTM	A403-WP316
REEB	Reducer Ecc. Butt-Weld. End	DN	20-600	ASTM	A403-WP316
TERB	Tee Reducing Butt-Weld. End	DN	20-50	ASTM	A403-WP316
TERS	Tee Reducing Socket-Weld. End	DN	20-40	ASTM	A182-F316

Note:
- For full material description see relevant MESC buying description.
- Where both socket weld and butt weld fittings are specified, preference is subject to company approval.

* VALVES

BARF	Ball Valve Red. Bore Flanged	DN 15-250	Body:	A351-CF8M, A182-F316	
			Int:	AISI 316L/PTFE	
			Seats:	PTFE	
CHVF	Check Valve Flanged	DN 15-40	Body:	ASTM	A351-CF8M, A182-F316
			Trim:	AISI	316L + Stellite
			Gask:	SS/PTFE	
CHWL	Check Valve Wafer lug	DN 50-400	Body:	ASTM	A351-CF8M, A182-F316
			Plate:	AISI	316L
GAVF	Gate Valve Flanged	DN 50-400	Body:	ASTM	A351-CF8M, A182-F316
			Trim:	AISI	316L + Stellite
			Gask:	SS/PTFE	
GLBF	Globe Valve Flanged. Bellows	DN 15-200	Body:	ASTM	A351-CF8m, A182-F316
			Trim:	AISI	321
			Gask:	SS/PTFE	

* MISCELLANEOUS

GKSW	Gasket, Spiral Wound	DN 15-600	AISI 316, 316L Graphite Filled CS Centring-, SS Inner-Ring.		
ORFS	Orifice Flange Set	DN 50-600	ASTM	A182-F316	
STBT	Stud Bolt with Nuts		Studs:	ASTM	A193-B7
			Nuts:	ASTM	A194-2H

Class No.: AS05	Page: 3	Content: Piping Components

ITEM DESCRIPTION			NOMINAL PIPE SIZE 15	20	25	40	50	80	100	150	200	250	300	350	400	450	500	600
* PIPE																		
Pipe		74.36.40	*	*	*	*	*	*	*	*	*	*	*					
		74.36.00												*	*	*	*	*
* FLANGES																		
Blind Flange		76.62.10	*	*	*	*	*	*	*	*	*	*	*	*	*	*	*	*
Blind Flange Liner		76.80.00	*	*	*	*	*	*	*	*	*	*	*	*	*	*	*	*
Lap-Joint Flanged		76.62.20	*	*	*	*	*	*	*	*	*							
Spectacle Blind Flange		76.88.09	*	*	*	*	*	*	*	*	*	*	*	*	*	*	*	*
Spacer Ring Type (ANS Flanges)		76.88.00	*	*	*	*	*	*	*	*	*	*	*	*	*	*	*	*
Welding Neck Flange		76.65.80	*	*	*	*	*	*	*	*	*	*	*	*	*	*	*	*
* FITTINGS																		
Cap	Butt-Weld. End	76.33.18	*	*	*	*	*	*	*	*	*	*	*	*	*	*	*	*
Elbow 45 Deg.	Butt-Weld. End	76.33.38	*	*	*	*	*	*	*	*	*	*	*	*	*	*	*	*
Elbow 90 Deg.	Butt-Weld. End	76.33.40	*	*	*	*	*	*	*	*	*	*	*	*	*	*	*	*
Equal Tee	Butt-Weld. End	76.33.84	*	*	*	*	*	*	*	*	*	*	*	*	*	*	*	*
Elbow 45 Deg.	Socket-Weld. End	76.37.38	*	*	*	*												
Elbow 90 Deg.	Socket-Weld. End	76.37.39	*	*	*	*												
Equal Tee	Socket-Weld. End	76.37.84	*	*	*	*												
Coupling	Socket-Weld. End	76.37.28	*	*	*	*												
Cap	Socket-Weld. End	76.37.18	*	*	*	*												
* VALVES																		
Ball Valve Red. Bore Flanged		75.40.08	*	*	*	*	*	*	*	*	*	*						
Check Valve Flanged		75.40.13	*	*	*	*	*	*	*	*	*	*	*	*	*			
Gate Valve Flanged		75.40.33	*	*	*	*	*	*	*	*	*	*	*	*	*			
Globe Valve Flanged		75.40.40	*	*	*	*	*	*	*	*	*							
* MISCELLANEOUS																		
Gasket, Spiral Wound		85.41.37	*	*	*	*	*	*	*	*	*	*	*	*	*	*	*	*
Orifice Flange Set		60.00.00					*	*	*	*	*	*	*	*	*	*	*	*

Class No.: AS05	Page: 4	Content: Reducing Piping Components

Run		Br.	BROB 76.00.00	RECB 76.33.70	REEB 76.33.73	TERB 76.33.85	TERS 76.37.85
20	×	15		*	*	*	*
25	×	15		*	*	*	*
25	×	20		*	*	*	*
40	×	20		*	*		*
40	×	25		*	*	*	*
50	×	25		*	*		
50	×	40		*	*	*	
80	×	40		*	*		
80	×	50	*	*	*		
100	×	50	*	*	*		
100	×	80	*	*	*		
150	×	50	*				
150	×	80	*	*	*		
150	×	100	*	*	*		
200	×	50	*				
200	×	80	*				
200	×	100	*	*	*		
200	×	150	*	*	*		
250	×	50	*				
250	×	80	*				
250	×	100	*				
250	×	150	*	*	*		
250	×	200	*	*	*		
300	×	50	*				
300	×	80	*				
300	×	100	*				
300	×	150	*	*	*		
300	×	200	*	*	*		
300	×	250	*	*	*		
350	×	50	*				
350	×	80	*				
350	×	100	*				
350	×	150	*				
350	×	200	*				
350	×	250	*	*	*		
350	×	300	*	*	*		

Run		Br.	BROB 76.00.00	RECB 76.33.70	REEB 76.33.73
400	×	50	*		
400	×	80	*		
400	×	100	*		
400	×	150	*		
400	×	200	*	*	*
400	×	250	*	*	*
400	×	300	*	*	*
400	×	350	*	*	*
450	×	50	*		
450	×	80	*		
450	×	100	*		
450	×	150	*		
450	×	200	*		
450	×	250	*	*	*
450	×	300	*	*	*
450	×	350	*	*	*
450	×	400	*	*	*
500	×	50	*		
500	×	80	*		
500	×	100	*		
500	×	150	*		
500	×	200	*		
500	×	250	*		
500	×	300	*	*	*
500	×	350	*	*	*
500	×	400	*	*	*
500	×	450	*	*	*
600	×	50	*		
600	×	80	*		
600	×	100	*		
600	×	150	*		
600	×	200	*		
600	×	250	*		
600	×	300	*		
600	×	350	*		
600	×	400	*	*	*
600	×	450	*	*	*
600	×	500	*	*	*

COMP.	NAME	DESCRIPTION
BROS	Branch Fitting Outlet	Socket-Weld. End
BROB	Branch Outlet Red.	Butt-Weld
RECB	Reducer Conc.	Butt-Weld. End
REEB	Reducer Ecc.	Butt-Weld. End
TERB	Tee Reducing	Butt-Weld. End
TERS	Tee Reducing	Socket-Weld. End

RUN	Br.	BROS 76.80.26
40-150	15	*
200-600		*
50-80	20	*
100-600		*
50	25	*
80-100		*
150-600		*
80-100	40	*
150-300		*
350-600		*

Class No.: AS05	Page: 5	Content: Bolting and Assemblies

BOLT SET FLANGED JOINTS

DN	No.	Inch		mm	81.38.61
15	4	1/2	×	60	*
20	4	1/2	×	65	*
25	4	1/2	×	70	*
40	4	1/2	×	75	*
50	4	5/8	×	80	*
80	4	5/8	×	95	*
100	8	5/8	×	95	*
150	8	3/4	×	100	*
200	8	3/4	×	110	*
250	12	7/8	×	120	*
300	12	7/8	×	120	*
350	12	1	×	130	*
400	16	1	×	140	*
450	16	1-1/8	×	150	*
500	20	1-1/8	×	160	*
600	20	1-1/4	×	180	*

BOLT SET SPECTACLE/SPACER

DN	No.	Inch		mm	81.38.61
15	4	1/2	×	70	*
20	4	1/2	×	70	*
25	4	1/2	×	80	*
40	4	1/2	×	80	*
50	4	5/8	×	90	*
80	4	5/8	×	110	*
100	8	5/8	×	110	*
150	8	3/4	×	120	*
200	8	3/4	×	125	*
250	12	7/8	×	140	*
300	12	7/8	×	145	*
350	12	1	×	160	*
400	16	1	×	170	*
450	16	1-1/8	×	180	*
500	20	1-1/8	×	195	*
600	20	1-1/4	×	215	*

BOLT SET ORIFICE FLANGES

DN	No.	Inch		mm	81.38.61
15	4	5/8	×	120	*
20	4	5/8	×	120	*
25	4	5/8	×	120	*
40	4	¾	×	130	*
50	8	5/8	×	150	*
80	8	¾	×	150	*
100	12	¾	×	140	*
150	12	¾	×	140	*
200	12	7/8	×	150	*
250	16	1	×	170	*
300	16	1-1/8	×	190	*
350	20	1-1/8	×	195	*
400	20	1-1/4	×	210	*
450	24	1-1/4	×	220	*
500	24	1-1/4	×	230	*
600	24	1-½	×	260	*

DRAIN POINT Fig. 2V

Run DN 15-25	Br DN 15	
Run DN 40	Br DN 20	No.
Branch: Table Page 1		1
Ball Valve Red. Bore Flanged		1
Blind Flange		1
Blind Flange Liner		1
Gasket Spiral Wound		2
Lap-Joint Flange		1
Stub-End		1
Stud Bolt with Nuts		8

* DRAIN POINT Fig. 2R

Run DN 50-600	Br DN 20	No.
Branch: BROB		1
Ball Valve Red. Bore Flanged		1
Blind Flange		1
Blind Flange Liner		1
Gasket Spiral Wound		2
Stud Bolt with Nuts		8
Welding Neck Flange		1

* VENT POINT Fig. 1V

Run DN 15-25	Br DN 15	
Run DN 40	Br DN 20	No.
Branch: Table Page 1		1
Blind Flange		1
Blind Flange Liner		1
Gasket Spiral Wound		2
Globe Valve Flanged		1
Lap-Joint Flange		1
Stub-End		1
Stud Bolt with Nuts		8

* VENT POINT Fig. 1R

Run DN 50-600	Br DN 20	No.
Branch: BROB		1
Blind Flange		1
Blind Flange Liner		1
Gasket Spiral Wound		2
Globe Valve Flanged		1
Stud Bolt with Nuts		8
Welding Neck Flange		1

Class No.: AX01	Page: 1	Content: General
Base Material: Glass-Fiber Reinforced Epoxy	First Issue: Revision:	
Rating: PN 20 (Class 150)	Date:	
Corrosion Allowance: 0 mm	Sign:	

Temperature °C		0	90
Pressure Barg	DN 25-600	10.0	10.0

TABLE OF SCHEDULES

DN	Schedule
25	*
40	*
50	*
80	*
100	*
150	*
200	*
250	*
300	*
350	*
400	*
450	*
500	*
600	*

Notes:
- Design limits are based on nominal pressure (PN 10) of class components.
- For "requirements for GRE pipe and fittings", see Appendix J.
- For GRE flanges, bolts to be provided with washers.
- Flat face GRE flanges connected to raised face flanges must have a steel backing ring behind the GRE flanges.
- Pipe, fittings and flanges - DN 25 - 400 (adhesive bonded joint system).
- Pipe, fittings and flanges - DN 450 - 600 (laminated joints, custom made pipe work).
- For dimensions of pipe and fittings see product list of selected manufacturer.
- Flanges to be drilled in accordance with ANSI B16.5, CL.150.
- Diaphragm valves not to be used as liquid static head shutt-off valves on equipment.

Class No.: AX01	Page: 2	Content: Material Descriptions

* VALVES

BARF	Ball Valve Red. Bore Flanged	DN	25-200	Body:	ASTM A216-WCB/WCC, A105
				Ball:	Lined Body Mat. or Alum.
				Stem:	ASTM B574
				Lining:	PTFE or PFA
BUVW	Butterfly Valve Wafer Type	DN	50-600	Body:	ASTM A216-WCB/WCC, A105
				Disc:	ASTM A182-F316, 316L
				Shaft:	ASTM A182-F316, 316L
				Lining:	PTFE or PFA
CHVF	Check Valve Flanged	DN	25-150	Body:	ASTM A216-WCB/WCC, A105
				Ball:	Lined Body Mat. or Alum.
				Lining:	PTFE or PFA
DIVF	Diaphragm Valve Flanged	DN	25-150	Body:	ASTM A216-WCB/WCC Polypropylene Lined
				Diaph:	PTFE with IIR Backing

* MISCELLANEOUS

GKFF	Gasket, Flat Face	DN	25-600	Chloroprene Rubber MIN Hardness 65 Shore A	
GKRF	Gasket, Raised Face	DN	25-600	Chloroprene Rubber MIN Hardness 65 Shore A	
STBT	Stud Bolt with Nuts		---	Studs:	ASTM A193-B7
				Nuts:	ASTM A194-2H
WABL	Washer Black		---	ASTM A307-B	

Class No.: AX01	Page: 3	Content: Piping Components

ITEM DESCRIPTION	MESC	NOMINAL PIPE SIZE 25	40	50	80	100	150	200	250	300	350	400	450	500	600
* VALVES															
Ball Valve Red. Bore Flanged	75.72.13/15	*	*	*	*	*	*	*							
Butterfly Valve Wafer Type	75.78.80			*	*	*	*	*	*	*	*	*	*	*	*
Check Valve Flanged	75.37.12	*	*	*	*	*	*								
Diaphragm Valve Flanged	75.74.00	*	*	*	*	*	*								
* MISCELLANEOUS															
Gasket, Flat Face	85.00.00	*	*	*	*	*	*	*	*	*	*	*	*	*	*
Gasket, Raised Face	85.00.00	*	*	*	*	*	*	*	*	*	*	*	*	*	*

Class No.:	AX01	Page:	4	Content:	Reducing Piping Components

Class No.:	AX01	Page:	5	Content:	Bolting and Assemblies

BLACK WASHER SET

DN	No.	Inch		mm	81.78.54
25	8	1/2	×	01	*
40	8	1/2	×	01	*
50	8	5/8	×	01	*
80	8	5/8	×	01	*
100	12	5/8	×	01	*
150	12	3/4	×	01	*
200	12	3/4	×	01	*
250	24	7/8	×	01	*
300	24	7/8	×	01	*
350	24	1	×	01	*
400	32	1	×	01	*
450	32	11/8	×	01	*
500	40	11/8	×	01	*
600	40	11/4	×	01	*

BOLT SET GRE PN 10/WAFER

DN	No.	Inch		mm	81.38.61
50	4	5/8	×	195	*
80	4	5/8	×	215	*
100	8	5/8	×	230	*
150	8	3/4	×	250	*
200	8	3/4	×	255	*
250	12	7/8	×	295	*
300	12	7/8	×	310	*
350	12	1	×	340	*
400	16	1	×	355	*
450	16	11/8	×	400	*
500	20	11/8	×	420	*
600	20	11/4	×	490	*

BOLT SET FOR GRE FLANGES

DN	No.	Inch		mm	81.38.61
25	4	½	×	80	*
40	4	½	×	90	*
50	4	5/8	×	110	*
80	4	5/8	×	110	*
100	8	5/8	×	110	*
150	8	¾	×	130	*
200	8	¾	×	140	*
250	12	7/8	×	160	*
300	12	7/8	×	170	*
350	12	1	×	190	*
400	16	1	×	210	*
450	16	11/8	×	240	*
500	20	11/8	×	250	*
600	20	11/4	×	275	*

BOLT SET FOR GRE PN 10/STEEL FLANGES

DN	No.	Inch		mm	81.38.61
25	4	1/2	×	100	*
40	4	1/2	×	100	*
50	4	5/8	×	110	*
80	4	5/8	×	130	*
100	8	5/8	×	130	*
150	8	3/4	×	150	*
200	8	3/4	×	150	*
250	12	7/8	×	170	*
300	12	7/8	×	170	*
350	12	1	×	190	*
400	16	1	×	195	*
450	16	11/8	×	210	*
500	20	11/8	×	220	*
600	20	11/4	×	245	*

Class No.: AZ01	Page: 1	Content: General
Base Material: Carbon Steel Galvanized (Threaded)	First Issue: Revision:	
Rating: PN 20 (Class 150)	Date:	
Corrosion Allowance: 0 mm	Sign:	

Temperature °C		0	100
Pressure Barg	DN 15-50	16.0	16.0

TABLE OF SCHEDULES

DN	Schedule
15	80
20	80
25	80
40	80
50	80

BRANCH CONNECTIONS 90 DEGREES

Run Size	BRANCH SIZE 15	20	25	40	50
50	R	R	R	R	T
40	R	R	R	T	
25	R	R	T		
20	R	T			
15	T				

Notes:

-Design limits are acc. valve rating BS 5154
- Galvanized pipe and pipe spools may be joined by field welds (for wet systems only)
- Piston type check valves for horizontal mounting only.
- Under ground carbon steel components (incl. bolting) shall be protected by coating as per IPS-E-TP-270.
- Flanged joints are preferred above threaded joints.
- For pipes, fittings and flanges, sizes DN 80 and above use class AZ05.
- After shop fabrication, pipe spools shall be galvanized in accordance to ASTM A53.
- Pre-fabricated pipe spools shall have flanged ends and be limited to L-or Z-shapes.
- Application of other types of branch connections is subject to company approval.

CODE	EXPLANATION OF CHARACTERS
R	Reducing tee (threaded)
T	Equal tee (threaded)

Class No.: AZ01	Page: 2	Content: Material Descriptions

* PIPE				
PIPE	Pipe	DN	15-50	API 5L-B Hot Dip Galvanized To: ASTM A53 or BS 729
PNTT	Pipe Nipple Thrd. Ends L = 50 mm	DN	15-25	ASTM A105, Hot Dip Galvanized To: ASTM A153-B or BS 729
PT80	Pipe Nipple Thrd. Ends L = 80 mm	DN	15-50	ASTM A105, Hot Dip Galvanized To: ASTM A153-B or BS 729
PT99	Pipe Nipple Thrd. Ends L = 100 mm	DN	15-100	ASTM A105, Hot Dip Galvanized To: ASTM A153-B or BS 729
* FLANGES				
BLFL	Blind Flange	DN	15-250	ASTM A105, Hot Dip Galvanized To: ASTM A153-B or BS 729
FLTR	Flange Threaded	DN	15-150	ASTM A105, Hot Dip Galvanized To: ASTM A153-B or BS 729
LJFL	Lap-Joint Flange		---	ASTM A105, Hot Dip Galvanized To: ASTM A153-B or BS 729
* FITTINGS				
CAPB	Cap Threaded	DN	15-100	ASTM A105, Hot Dip Galvanized To: ASTM A153-B or BS 729
COUT	Coupling Threaded Ends	DN	15-100	ASTM A105, Hot Dip Galvanized To: ASTM A153-B or BS 729
E45T	Elbow 45 Deg. Thrd. End	DN	15-100	ASTM A105, Hot Dip Galvanized To: ASTM A153-B or BS 729
E90T	Elbow 90 Deg. Thrd.End	DN	15-100	ASTM A105, Hot Dip Galvanized To: ASTM A153-B or BS 729
PLUG	Plug NPT	DN	15-100	ASTM A105, Hot Dip Galvanized To: ASTM A153-B or BS 729
TEET	Tee Threaded Ends	DN	15-100	ASTM A105, Hot Dip Galvanized To: ASTM A153-B or BS 729
UNIT	Union Threaded Ends	DN	15-100	ASTM A105, Hot Dip Galvanized To: ASTM A153-B or BS 729
* REDUCING FITTINGS				
REBT	Reduced Bushing Thrd. Ends	DN	20-100	ASTM A105, Hot Dip Galvanized To: ASTM A153-B or BS 729
RECT	Reducer Conc. Thrd. Ends	DN	20-100	ASTM A105, Hot Dip Galvanized To: ASTM A153-B or BS 729
REFT	Reducer Flanged Thrd. Ends	DN	20-100	ASTM A105, Hot Dip Galvanized To: ASTM A153-B or BS 729
TERT	Tee Reducing Thrd. Ends	DN	20-100	ASTM A105, Hot Dip Galvanized To: ASTM A153-B or BS 729

Note: For full material description see relevant MESC buying description.

* VALVES				
BUVW	Butterfly Valve Wafer Type	DN	50-250	Body:ASTM A216-WCB/WCC, A105 Rubber Lined Disc: ASTM B148
CHVT	Check Valve Threaded Ends	DN	15-50	Body/TrimASTM B148
GAVP	Gate Valve Flanged Flat Face	DN	15-80	Body/Trim:ASTM B148
GAVT	Gate Valve Threaded Ends	DN	15-50	Body/Trim:ASTM B148
GLVT	Globe Valve Threaded Ends	DN	15-40	Body/Trim:ASTM B148
* MISCELLANEOUS				
GKGF	Gasket Full Face	DN	15-250	C.A.F
GKTI	Gasket, RF.	DN	15-250	C.A.F
STBT	Stud Bolt with Nuts		---	Studs: ASTM A193-B7 Nuts: ASTM A194-2H

Class No.: AZ01	Page: 3	Content: Piping Components

ITEM DESCRIPTION		MESC	NOMINAL PIPE SIZE 15	20	25	40	50	80	100	150	200	250
* PIPE												
Pipe		74.13.11	*	*	*	*	*					
Pipe Nipple Thrd. Ends L = 50 mm		76.06.56	*	*	*							
Pipe Nipple Thrd. Ends L = 80 mm		76.06.56	*	*	*	*	*					
Pipe Nipple Thrd. Ends L = 100 mm		76.06.56	*	*	*	*	*					
* FLANGES												
Blind Flange		76.62.15	*	*	*	*	*	*	*	*	*	*
Flange Treaded		76.62.61	*	*	*	*	*					
* FITTINGS												
Cap	Threaded	76.06.18	*	*	*	*	*	*				
Coupling	Threaded Ends	76.06.28	*	*	*	*	*	*				
Elbow 45 Deg.	Threaded Ends	76.06.38	*	*	*	*	*	*				
Elbow 90 Deg.	Threaded Ends	76.06.39	*	*	*	*	*	*				
Plug NPT		76.06.66	*	*	*	*	*	*				
Tee	Threaded Ends	76.06.84	*	*	*	*	*	*				
Union	Threaded Ends	76.06.91	*	*	*	*	*	*				
* VALVES												
Butterfly Valve Wafer Type		75.72.78					*	*	*	*	*	*
Check Valve Threaded Ends		75.21.12	*	*	*	*	*					
Gate Valve Flanged Flat Face7		75.21.00	*	*	*	*	*	*				
Gate Valve Threaded Ends		75.21.16	*	*	*	*	*					
Globe Valve Threaded Ends		75.21.18	*	*	*	*	*					
* MISCELLANEOUS												
Gasket, Full Face		85.31.07	*	*	*	*	*	*	*	*	*	*
Gasket, RF.		85.31.02	*	*	*	*	*	*	*	*	*	*

Class No.: AZ01	Page: 4	Content: Reducing Piping Components

Run		Br.	REBT 76.06.14	RECT 76.06.70	REFT 76.62.61	TERT 76.06.85
20	×	15	*	*	*	*
25	×	15	*	*	*	*
25	×	20	*	*	*	*
40	×	15	*	*	*	*
40	×	20	*	*	*	*
40	×	25	*	*	*	*
50	×	15	*	*	*	*
50	×	20	*	*	*	*
50	×	25	*	*	*	*
50	×	40	*	*	*	*
80	×	15			*	
80	×	20			*	
80	×	25	*	*	*	*
80	×	40	*	*	*	*
80	×	50	*	*	*	*
100	×	15			*	
100	×	20			*	
100	×	25			*	
100	×	40	*	*	*	*
100	×	50	*	*	*	*
100	×	80	*	*	*	*

COMP. NAME	DESCRIPTION
REBT	Reduced Bushing Thrd. Ends
RECT	Reduced Conc. Thrd. Ends
REFT	Reducing Flange Threaded End
TERT	Tee Reducing Threaded Ends

Class No.: AS05	Page: 5	Content: Bolting and Assemblies

BOLTS.WA. LUG BUTTFY VALVE

DN	No.	Inch		mm	81.38.61
15	4	5/8	×	130	*
80	4	5/8	×	150	*
100	8	5/8	×	150	*
150	8	3/4	×	160	*
200	8	3/4	×	170	*
250	12	7/8	×	190	*

BOLT SET FLANGED JOINTS

DN	No.	Inch		mm	81.38.61
15	4	1/2	×	60	*
20	4	1/2	×	70	*
25	4	1/2	×	70	*
40	4	1/2	×	80	*
50	4	5/8	×	80	*
80	4	5/8	×	100	*
100	8	5/8	×	100	*
150	8	3/4	×	100	*
200	8	3/4	×	110	*
250	12	7/8	×	120	*

BOLT SET SPECTACLE/SPACER

DN	No.	Inch		mm	81.38.61
15	4	1/2	×	70	*
20	4	1/2	×	70	*
25	4	1/2	×	80	*
40	4	1/2	×	80	*
50	4	5/8	×	90	*
80	4	5/8	×	110	*
100	8	5/8	×	110	*
150	8	3/4	×	120	*
200	8	3/4	×	130	*
250	12	7/8	×	140	*

* DRAIN POINT Fig. 0C

Run DN 15-25 Br DN 15

	No.
Branch: Table Page 1	1
Cap Threaded	1
Gate Valve Threaded Ends	1
Pipe Nipple Thrd. Ends L = 50 mm	2

* DRAIN POINT Fig. 0C

Run DN 40-50 Br DN 20

	No.
Branch: Table Page 1	1
Cap Threaded	1
Gate Valve Threaded Ends	1
Pipe Nipple Thrd. Ends L = 50 mm	2

* VENT POINT Fig. 1C

Run DN 15-25 Br DN 15

	No.
Branch: Table Page 1	1
Cap Threaded	1
Globe Valve Threaded Ends	1
Pipe Nipple Thrd. Ends L = 50 mm	2

* VENT POINT Fig. 1C

Run DN 40-50 Br DN 20

	No.
Branch: Table Page 1	1
Cap Threaded	1
Globe Valve Threaded Ends	1
Pipe Nipple Thrd. Ends L = 50 mm	2

Class No.: AZ02	Page: 1	Content: General
Base Material: Carbon Steel Rubber Lined	First Issue: Revision:	
Rating: PN 20 (Class 150)	Date:	
Corrosion Allowance: 0 mm	Sign:	

Temperature °C		0	30	80
Pressure Barg.	DN 25-150	10.0	10.0	10.0
	DN 200-300	6.0	6.0	6.0
Pressure MBar Abs	DN 25-300	130.0	130.0	

TABLE OF SCHEDULES

DN	Schedule
25	40
40	40
50	40
80	40
100	40
150	40
200	40
250	40
300	40

BRANCH CONNECTIONS 90 DEGREES

Run Size	BRANCH SIZE 25	40	50	80	100	150	200	250	300
300	D	D	D	D	D	B	B	B	A
250	D	D	D	D	B	B	B	A	
200	D	D	D	D	B	B	A		
150	D	D	D	B	B	A			
100	D	B	B	B	A				
80	D	B	B	A					
50	B	B	A						
40	B	A							
25	A								

Notes:
-Design limits are based on allowable pressure rating of valves
- For requirements for rubber linings of process equipment and piping, see Appendix H.
-All prefabricated piping parts and blind flanges shall be lined with hard natural rubber, minimum hardness = 60 shore D.
- Diaphragm valves not to be used as liquid static head shut-off valves on equipment.
- For type and overall dimensions of (combined) flanged fittings see drawing 4 of Appendix H.
- For overall dimensions of flanged pipe see drawing 5 of Appendix H.
- Branch pieces are intended for instrument connections and (where applicable) for vent-, and drain points.
- Application of other types of branch connections shall be subject to the prior approval of company.

CODE	EXPLANATION OF CHARACTERS
A	Equal tee
B	Reducing tee
D	Pipe to pipe

Class No.: AZ02	Page: 2	Content: Material Descriptions

* PIPE

PIPE	Pipe	DN	25-300	ASTM	A106-B

* FLANGES

BLFM	Blind Flange Modified	DN	25-300	ASTM	A105
SOFM	Slip-On Flange Modified	DN	25-300	Special Face, ASTM A105	
WNFM	Welding Neck Flange Modified	DN	25-300	Special Face, ASTM A105	

* FITTINGS

E45B	Elbow 45 Deg.	Butt-Weld. Ends	DN	25-300	ASTM	A234-WPB
E90B	Elbow 90 Deg.	Butt-Weld. Ends	DN	25-300	ASTM	A234-WPB
SP12	Spacer Straight	L = 12	DN	25-300	ASTM	A285-C
SP18	Spacer Straight	L = 18	DN	25-300	ASTM	A285-C
SP25	Spacer Straight	L = 25	DN	25-300	ASTM	A285-C
TEEB	Equal Tee	Butt-Weld. Ends	DN	25-300	ASTM	A234-WPB

* REDUCING FITTINGS

RECB	Reducer Conc.	Butt-Weld. Ends	DN	40-300	ASTM	A234-WPB
REEB	Reducer Ecc.	Butt-Weld. Ends	DN	40-300	ASTM	A234-WPB
TERB	Tee Reducing	Butt-Weld. Ends	DN	40-300	ASTM	A234-WPB

Note:
For full material description see relevant MESC buying description.

* VALVES

BARF	Ball Valve Red. Bore Flanged	DN	25-200	Body:	ASTM A216-WCB/WCC, A105
				Ball:	Lined Body Mat., Alum.
				Stem:	ASTM B574
				lining:	PTFE, PFA
BUVW	Butterfly Valve Wafer Type	DN	50-300	Body:	ASTM A216-WCB/WCC, A105
					Rubber Lined
				Disc:	ASTM B148
CHVF	Check Valve Flanged	DN	25-150	Body:	ASTM A216-WCB/WCC, A105
				Ball:	Lined Body Mat., Alum.
				l ining:	PTFE, PFA
DIVF	Diaphragm Valve Flanged	DN	25-300	Body:	ASTM A216 or A105
				lining:	NR (Natural Rubber)
				Diaph:	IRR (Butyl Rubber)

* MISCELLANEOUS

GKRF	Gasket, Raised Face	DN	25-300	Natural Rubber, Black	
STBT	Stud Bolt with Nuts			Hardness 56 Shore A	
			---	Studs:	ASTM A193-B7
				Nuts:	ASTM A194-2H

Class No.: AZ02	Page: 3	Content: Piping Components

ITEM DESCRIPTION		MESC	NOMINAL PIPE SIZE 25	40	50	80	100	150	200	250	300
* PIPE											
Pipe		74.30.05	*	*	*	*	*	*	*	*	*
* FLANGES											
Blind Flange Modified		76.62.10	*	*	*	*	*	*	*	*	*
Slip-On Flange Modified		76.62.30	*	*	*	*	*	*	*	*	*
Welding Neck Flange Modified		76.62.79	*	*	*	*	*	*	*	*	*
* FITTINGS											
Elbow 45 Deg.	Butt-Weld. End	76.30.38	*	*	*	*	*	*	*	*	*
Elbow 90 Deg.	Butt-Weld. End	76.30.40	*	*	*	*	*	*	*	*	*
Spacer Straight	L = 12	76.82.68	*	*	*	*	*	*	*	*	*
Spacer Straight	L =18	76.82.68	*	*	*	*	*	*	*	*	*
Spacer Straight	L =25	76.82.68	*	*	*	*	*	*	*	*	*
Equal Tee	Butt-Weld. EndS	76.30.84	*	*	*	*	*	*	*	*	*
* VALVES											
Ball Valve Red. Bore Flanged		75.72.13/15	*	*	*	*	*	*	*		
Butterfly Valve Wafer Type		75.72.78/80			*	*	*	*	*	*	*
Check Valve Flanged		75.37.12	*	*	*	*	*	*			
Diaphragm Valve Flanged		75.74.00	*	*	*	*	*	*	*	*	*
* MISCELLANEOUS											
Gasket, Raised Face		85.45.02	*	*	*	*	*	*	*	*	*

Class No.: AZ02	Page: 4	Content: Reducing Piping Components

Run		Br.	BRPW 76.82.00	RECB 76.30.72	REEB 76.30.73	TERB 76.30.85
40	×	25		*	*	*
50	×	25		*	*	*
50	×	40		*	*	*
80	×	25	*			
80	×	40	*	*	*	*
80	×	50		*	*	*
100	×	25	*			
100	×	40	*	*	*	
100	×	50		*	*	*
100	×	80		*	*	*
150	×	25	*			
150	×	40	*			
150	×	80		*	*	*
150	×	100		*	*	*
200	×	25	*			
200	×	40	*			
200	×	100		*	*	*
200	×	150		*	*	*
250	×	25	*			
250	×	40	*			
250	×	100		*	*	*
250	×	150		*	*	*
250	×	200		*	*	*
300	×	25	*			
300	×	40	*			
300	×	150		*	*	*
300	×	200		*	*	*
300	×	250		*	*	*

COMP. NAME	DESCRIPTION
BRPW	Branch Piece, Wafer Type
RECB	Reducer Conc. Butt-Weld. Ends
REEB	Reducer Ecc. Butt-Weld. Ends
TERB	Tee Reducing Butt-Weld. Ends

Class No.: AZ02	Page: 5	Content: Bolting and Assemblies

BOLT SET BRANCH PIECE

DN	No.	Inch		mm	81.38.61
80	4	5/8	×	170	*
100	8	5/8	×	170	*
150	8	3/4	×	170	*
200	8	3/4	×	180	*
250	12	7/8	×	190	*
300	12	7/8	×	190	*

BOLT SET FLANGED JOINTS

DN	No.	Inch		mm	81.38.61
25	4	1/2	×	70	*
40	4	1/2	×	80	*
50	4	5/8	×	80	*
80	4	5/8	×	100	*
100	8	5/8	×	100	*
150	8	3/4	×	100	*
200	8	3/4	×	110	*
250	12	7/8	×	120	*
300	12	7/8	×	120	*

BOLT SET SPACER L = 12

DN	No.	Inch		mm	81.38.61
25	4	1/2	×	90	*
40	4	1/2	×	90	*
50	4	5/8	×	100	*
80	4	5/8	×	110	*
100	8	5/8	×	110	*
150	8	3/4	×	120	*
200	8	3/4	×	130	*
250	12	7/8	×	140	*
300	12	7/8	×	140	*

BOLT SET SPACER L = 18

DN	No.	Inch		mm	81.38.61
25	4	1/2	×	90	*
40	4	1/2	×	100	*
50	4	5/8	×	100	*
80	4	5/8	×	120	*
100	8	5/8	×	120	*
150	8	3/4	×	120	*
200	8	3/4	×	130	*
250	12	7/8	×	140	*
300	12	7/8	×	140	*

BOLT SET SPACER L = 25

DN	No.	Inch		mm	81.38.61
25	4	1/2	×	100	*
40	4	1/2	×	100	*
50	4	5/8	×	110	*
80	4	5/8	×	120	*
100	8	5/8	×	120	*
150	8	3/4	×	130	*
200	8	3/4	×	140	*
250	12	7/8	×	150	*
300	12	7/8	×	150	*

Class No.: AZ03	Page: 1	Content: General
Base Material: Carbon Steel, Cement Lined	First Issue: Revision:	
Rating: PN 20 (Class 150)	Date:	
Corrosion Allowance: 0 mm	Sign:	

Temperature °C		0	45
urePress Barg.	DN 100-600	16.0	16.0
	DN 650-900	10.0	10.0

TABLE OF SCHEDULES

DN	Schedule
100	40
150	40
200	30
250	30
300	30
350	30
400	30
450	20
500	20
600	20
650	STD
700	STD
750	STD
800	STD
850	STD
900	STD

BRANCH CONNECTIONS 90 DEGREES

BRANCH SIZE

Run Size	100	150	200	250	300	350	400	450	500	600	650	700	750	800	850	900
900	D	D	D	D	D	D	M	M	M	M	B	B	B	B	B	A
850	D	D	D	D	D	D	M	M	M	M	B	B	B	B	A	
800	D	D	D	D	D	M	M	M	M	M	B	B	B	A		
750	D	D	D	D	M	M	M	M	M	M	B	B	A			
700	D	D	D	D	M	M	M	M	M	M	B	A				
650	D	D	D	D	M	M	M	M	M	M	A					
600	N	N	N	N	N	N	N	N	N	Q						
500	N	N	N	N	N	N	N	N	Q							
450	N	N	N	N	N	N	N	Q								
400	N	N	N	N	N	N	Q									
350	N	N	N	N	N	Q										
300	N	N	N	N	Q											
250	N	N	N	Q												
200	N	N	Q													
150	N	Q														
100	Q															

Notes:

- For requirements of cement-lined pipe and fittings see Appendix I.
- Pipe

Plain/spigot end	DN100-400	API 5L-B (Seamless)	
Plain/spigot end	DN450-600	API 5L-B (Welded)	
Butt-weld ends	DN650-900	API 5L-B (Welded)	

- Flanges

Slip-On, Spigot End	DN100-600	ASTM A105/API 5L-B
Welding Neck Flange	DN650-900	ASTM A105
Blind Flange	DN100-900	ASTM A105

- Fittings

Fabricated, Dwg. No. I-3	DN100-600	ASTM A234-WPB/API 5L-B ASTM A105
Fabricated, Dwg. No. I-4	DN650-600	ASTM A234-WPB/API 5L-B ASTM A105
Factory-Made, Butt-Weld	DN650-900	ASTM A234-WPB

For type and overall dimensions of fabricated fittings see Dwg. No. I-3 and Dwg. No. I-4

Factory-Made, butt-welding fittings to be in accordance with ASME/ANSI B16.9.

Relevant Drawings:

For dimensions of sleeves and tolerances of pipe ends see Dwg. No. I-5.

For flanged ends see Dwg. No. I-6.

For typical detail of set-on branch see Dwg. No. I-7.

CODE	EXPLANATION OF CHARACTERS
A	Equal tee, Factory made
B	Reducing tee, Factory made
D	Pipe to pipe
M	Reducing tee Dwg. No. I-4
N	Reducing tee Dwg. No. I-3
Q	Equal tee Dwg. No. I-3

Class No.: AZ03	Page: 2	Content: Material Descriptions

* FLANGES

BLFL	Blind Flange	DN	100-900	ASTM A105	

* FITTINGS

TEEB	Equal Tee	Butt-Weld. Ends	DN	100-900	ASTM	A234-WPB

* REDUCING FITTINGS

TERB	Tee Reducing Butt-Weld. Ends	DN	150-900	ASTM	A234-WPB

Note:
For full material description see relevant MESC buying description.
Carbon steel blind flanges to be protected as follow:
* Blast cleaning to SA 2½
* 400 mM (MIN) Epoxy coal tar paint.

* VALVES

BUVW	Butterfly Valve Wafer Type	DN	100-900	Body:	ASTM A216-WCB/WCC, A105 Rubber Lined
				Disc:	ASTM B148
CHWL	Dual PL. Check Valve Wafer Lug	DN	100-900	Body:	ASTM B148
				Int:	ASTM B148/NBR

* MISCELLANEOUS

GKFC	Gasket, Flat Face	DN	100-600	Chloroprene Rubber MIN Hardmess 70.5 Shore A	
GKRC	Gasket, Raised Face	DN	100-900	Chloroprene Rubber MIN Hardmess 70.5 Shore A	
STBT	Stud Bolt with Nuts		---	Studs:	ASTM A193-B7
				Nuts:	ASTM A194-2H

Class No.: AZ03	Page: 3	Content: Piping Components

ITEM DESCRIPTION		MESC	NOMINAL PIPE SIZE 100	150	200	250	300	350	400	450	500	600	650	700	750	800	850	900
* FLANGES																		
Blind Flange		76.62.10	*	*	*	*	*	*	*	*	*	*						
		76.70.12											*	*	*	*	*	*
* FITTINGS																		
Equal Tee	Butt-Weld. Ends	76.30.84	*	*	*	*	*	*	*	*	*	*	*	*	*	*	*	*
* VALVES																		
Butterfly Valve Wafer Type		75.72.78/80	*	*	*	*	*	*	*	*	*	*		*	*	*		*
Dual PL. Check Valve Wafer Lug			*	*	*	*	*	*	*	*	*	*			*			*
* MISCELLANEOUS																		
Gasket, Flat Face		85.45.02	*	*	*	*	*	*	*	*	*	*						
Gasket, Rised Face		85.45.02	*	*	*	*	*	*	*	*	*	*	*	*	*	*	*	*

Class No.: AZ03	Page: 4	Content: Reducing Piping Components

Run		Br.	TERB 76.30.85
150	×	100	*
200	×	100	*
200	×	150	*
250	×	100	*
250	×	150	*
250	×	200	*
300	×	150	*
300	×	200	*
300	×	250	*
350	×	150	*
350	×	200	*
350	×	250	*
350	×	300	*
400	×	200	*
400	×	250	*
400	×	300	*
400	×	350	*
500	×	450	*
600	×	450	*
600	×	500	*
700	×	650	*
750	×	650	*
750	×	700	*

COMP. NAME	DESCRIPTION
TERB	Tee Reducer Butt-Weld. Ends

Class No.:	AZ03	Page:	5	Content:	Bolting and Assemblies

BOLT SET FLANGED JOINTS

DN	No.	Inch		mm	81.38.61
100	8	5/8	×	100	*
150	8	3/4	×	100	*
200	8	3/4	×	110	*
250	12	7/8	×	120	*
300	12	7/8	×	120	*
350	12	1	×	130	*
400	16	1	×	140	*
450	16	11/8	×	150	*
500	20	11/8	×	160	*
600	20	11/4	×	180	*

BOLT SET FLANGED JOINTS-C

DN	No.	Inch		mm	81.38.61
650	24	11/4	×	220	*
700	28	11/4	×	220	*
750	28	11/4	×	230	*
800	28	11/4	×	240	*
850	32	11/2	×	260	*
900	32	11/2	×	275	*

BOLT SET WAFER BUTTERFLY C

DN	No.	Inch		mm	81.38.61
100	8	5/8	×	150	*
150	8	3/4	×	160	*
200	8	3/4	×	170	*
250	12	7/8	×	190	*
300	12	7/8	×	210	*
350	12	1	×	230	*
400	16	1	×	250	*
450	16	11/8	×	265	*
500	20	11/8	×	290	*
600	20	11/4	×	340	*
700	28	11/4	×	455	*
750	28	11/4	×	470	*
800	28	11/4	×	490	*
900	32	11/2	×	520	*

BOLT SET WAFER CHECK VALVE

DN	No.	Inch		mm	81.38.61
100	8	5/8	×	170	*
150	8	¾	×	210	*
200	8	¾	×	240	*
250	12	7/8	×	285	*
300	12	7/8	×	310	*
350	12	1	×	330	*
400	16	1	×	330	*
450	16	11/8	×	360	*
500	20	11/8	×	385	*
600	20	11/4	×	400	*
750	28	11/4	×	540	*
900	32	11/2	×	680	*

Class No.: AZ04	Page: 1	Content: General
Base Material: Carbon Steel, PTFE-Lined	First Issue: Revision:	
Rating: PN 20 (Class 150)	Date:	
Corrosion Allowance: 0 mm	Sign:	

Temperature °C		0	190
Pressure Barg	DN 25-200	10.0	10.0

TABLE OF SCHEDULES

DN	Schedule
25	80
40	80
50	80
80	40
100	40
150	40
200	30

Notes:
- Design limits are based on max. allowable pressure for ball, butterfly and check valves.
* Where diaphragm valves are used the max. allowable pressure would be as follows:
  Size range DN 25-150.

Temp. in Deg. C-	20	0	50	75	100	120	150
Press. Bar Ga.	10.0	10.0	10.0	10.0	7.5	6.5	5.0

- The following reducing flanges are, at the-large side-
  provided with tapholes:

40 × 25	80 × 40	150 × 100
50 × 25	80 × 50	200 × 150
50 × 40	100 × 80	

- Use boltset "Large side tap" for these flanges. Use boltset "large side fl.", for all other size combinations.
- Gaskets to be used for re-installation purposes only, and for connecting lined piping components to parts of vulnerable piping systems or equipment.
- The use of spacers shall be kept to a minimum.
- Diaphragm valves not to be used as liquid head shutt-off valves on equipment.

Class No.: AZ04	Page: 2	Content: Material Descriptions

* PIPE

P 10	Pipe Spool	L = 100	DN	25-40	ASTM A106-B,	PTFE-Lined
P 20	Pipe Spool	L = 200	DN	25-200	ASTM A106-B,	PTFE-Lined
P 30	Pipe Spool	L = 300	DN	25-200	ASTM A106-B,	PTFE-Lined
P 40	Pipe Spool	L = 400	DN	25-200	ASTM A106-B,	PTFE-Lined
P 60	Pipe Spool	L = 600	DN	25-200	ASTM A106-B,	PTFE-Lined
P 80	Pipe Spool	L = 800	DN	25-200	ASTM A106-B,	PTFE-Lined
P100	Pipe Spool	L = 1000	DN	25-200	ASTM A106-B,	PTFE-Lined
P150	Pipe Spool	L = 1500	DN	25-200	ASTM A106-B,	PTFE-Lined
P200	Pipe Spool	L = 2000	DN	25-200	ASTM A106-B,	PTFE-Lined
P300	Pipe Spool	L = 3000	DN	25-200	ASTM A106-B,	PTFE-Lined
P600	Pipe Spool	L = 6000	DN	25-150	ASTM A106-B,	PTFE-Lined

* FLANGES

BLFL	Blind Flange	DN	25-200	ASTM	A105
FLIN	Blind Flange Liner	DN	25-200	ASTM	D1457 Type 3, CL.1 or 2

* FITTINGS

CREL	Cross Equal		DN	25-200	ASTM	A216-WCB/WCC, PTFE/PFA-LD
E45L	Elbow 45 Deg.		DN	25-200	ASTM	A216-WCB/WCC, PTFE/PFA-LD
E90L	Elbow 90 Deg.		DN	25-200	ASTM	A216-WCB/WCC, PTFE/PFA-LD
SP15	Spacer Straight	L = 15	DN	25-200	ASTM	A105, PTFE/PFA-Lined
SP20	Spacer Straight	L = 20	DN	25-200	ASTM	A105, PTFE/PFA-Lined
SP25	Spacer Straight	L = 25	DN	25-200	ASTM	A105, PTFE/PFA-Lined
SP30	Spacer Straight	L = 30	DN	25-200	ASTM	A105, PTFE/PFA-Lined
SP35	Spacer Straight	L = 35	DN	25-200	ASTM	A105, PTFE/PFA-Lined
SP40	Spacer Straight	L = 40	DN	25-200	ASTM	A105, PTFE/PFA-Lined
SP50	Spacer Straight	L = 50	DN	25-200	ASTM	A105, PTFE/PFA-Lined
SP60	Spacer Straight	L = 60	DN	25-80	ASTM	A106-B, PTFE/PFA-Lined
			DN	100-200	ASTM	A105, PTFE/PFA-Lined
SP70	Spacer Straight	L = 70	DN	25-100	ASTM	A106-B, PTFE/PFA-Lined
			DN	150-200	ASTM	A105, PTFE/PFA-Lined
SP80	Spacer Straight	L = 80	DN	25-200	ASTM	A106-B, PTFE/PFA-Lined
SP90	Spacer Straight	L = 90	DN	25-200	ASTM	A106-B, PTFE/PFA-Lined
SP99	Spacer Straight	L = 100	DN	50-200	ASTM	A106-B, PTFE/PFA-Lined
SP10	Spacer Ring Type	L = 10	DN	25-200	PTFE	To ASTM D1457
TEEL	Equal Tee		DN	25-200	ASTM	A216-WCB/WCC, PTFE/PFA-LD

Note:
For full material description see relevant MESC buying description.

REDUCING FITTINGS

BRPL	Branch Piece, Wafer Type, Lined	DN	40-200	ASTM	A106-B PTFE-Lined
RECL	Reducer Conc. Lined	DN	40-200	ASTM	A216-WCB/WCC, PTFE/PFA-LD
REEL	Reducer Ecc. Lined	DN	40-200	ASTM	A216-WCB/WCC, PTFE/PFA-LD
REFL	Reducing Flange, Lined	DN	40-200	ASTM	A105 PTFE/PFA-Lined
TERL	Reducing Tee, Lined	DN	40-200	ASTM	A216-WCB/WCC, PTFE/PFA-LD

* VALVES

BARF	Ball Valve Red. Bore Flanged	DN	25-200	Body:	ASTM A216-WCB/WCC, A105
				Ball:	Lined Body Mat. or Alum.
				Stem:	ASTM B574
				Lining:	PTFE or PFA
BUVW	Butterfly Valve Wafer Type	DN	50-200	Body:	ASTM A216-WCB/WCC, A105
				Int:	AISI 316(L)
				Lining:	PTFE or PFA
CHVF	Check Valve Flanged	DN	25-150	Body:	ASTM A216-WCB/WCC, A105
				Ball:	Lined Body Mat. or Alum.
				Lining:	PTFE or PFA
DIVF	Diaphragm Valve Flanged	DN	25-150	Body:	ASTM A216-WCB/WCC, A105
					PTFE or PFA Lined
				Diaph:	PTFE with IIR Backing

* MISCELLANEOUS

GKRF	Gasket, Raised Face	DN	25-200	PTFE Reinf. with Mineral Filler	
STBT	Stud Bolt with Nuts		---	Studs:	ASTM A193-B7
				Nuts:	ASTM A194-2H

Class No.: AZ04	Page: 3	Content: Piping Components

ITEM DESCRIPTION		MESC	NOMINAL PIPE SIZE 25	40	50	80	100	150	200
* PIPE									
Pipe Spool	L = 100	74.94.41 *	*						
Pipe Spool	L = 200	74.94.41 *	*	*	*	*	*	*	
Pipe Spool	L = 300	74.94.41 *	*	*	*	*	*	*	
Pipe Spool	L = 400	74.94.41 *	*	*	*	*	*	*	
Pipe Spool	L = 600	74.94.41 *	*	*	*	*	*	*	
Pipe Spool	L = 800	74.94.41 *	*	*	*	*	*	*	
Pipe Spool	L = 1000	74.94.41 *	*	*	*	*	*	*	
Pipe Spool	L = 1500	74.94.41 *	*	*	*	*	*	*	
Pipe Spool	L = 2000	74.94.41 *	*	*	*	*	*	*	
Pipe Spool	L = 3000	74.94.41 *	*	*	*	*	*	*	
Pipe Spool	L = 6000	74.94.41 *	*	*	*	*	*		
* FLANGES									
Blind Flange		76.62.11 *	*	*	*	*	*	*	
Blind Flange Liner		76.80.81 *	*	*	*	*	*	*	
* FITTINGS									
Cross Equal		76.93.30 *	*	*	*	*	*	*	
Elbow 45 Deg.		76.93.38 *	*	*	*	*	*	*	
Elbow 90 Deg.		76.93.39 *	*	*	*	*	*	*	
Spacer Straight	L = 15	76.93.68 *	*	*	*	*	*	*	
Spacer Straight	L = 20	76.93.68 *	*	*	*	*	*	*	
Spacer Straight	L = 25	76.93.68 *	*	*	*	*	*	*	
Spacer Straight	L = 30	76.93.68 *	*	*	*	*	*	*	
Spacer Straight	L = 35	76.93.68 *	*	*	*	*	*	*	
Spacer Straight	L = 40	76.93.68 *	*	*	*	*	*	*	
Spacer Straight	L = 50	76.93.68 *	*	*	*	*	*	*	
Spacer Straight	L = 60	76.93.68 *	*	*	*	*	*	*	
Spacer Straight	L = 70	76.93.68 *	*	*	*	*	*	*	
Spacer Straight	L = 80	76.93.68 *	*	*	*	*	*	*	
Spacer Straight	L = 90	76.93.68 *	*	*	*	*	*	*	
Spacer Straight	L = 100	76.93.68		*	*	*	*	*	
Spacer Ring Type	L = 10	76.95.68 *	*	*	*	*	*	*	
Equal Tee		76.93.84 *	*	*	*	*	*	*	
* VALVES									
Ball Valve Red. Bore Flanged		77.55.00 *	*	*	*	*	*	*	
Butterfly Valve Wafer Type		77.60.20		*	*	*	*	*	
Check Valve Flanged		77.62.00 *	*	*	*	*	*		
Diaphragm Valve Flanged		77.64.00 *	*	*	*	*	*		
* MISCELLANEOUS									
Gasket, Raised Face		85.48.74 *	*	*	*	*	*	*	

Class No.:	AZ04	Page:	4	Content:	Reducing Piping Components, Bolting

Run	Br.	BRPL 76.93.11	RECL 76.93.70	REEL 76.93.71	REFL 76.93.95	TERL 76.93.85	
40	×	25	*	*	*	*	*
50	×	25	*	*	*	*	*
50	×	40	*	*	*	*	*
80	×	25	*			*	*
80	×	40	*	*	*	*	*
80	×	50		*	*	*	*
100	×	25	*			*	*
100	×	40	*			*	*
100	×	50		*	*	*	*
100	×	80		*	*	*	*
150	×	25	*			*	*
150	×	40	*			*	*
150	×	50				*	*
150	×	80		*	*	*	*
150	×	100		*	*	*	*
200	×	25	*			*	*
200	×	40	*			*	*
200	×	50				*	*
200	×	80				*	*
200	×	100		*	*	*	*
200	×	150		*	*	*	*

COMP. NAME	DESCRIPTION
BRPL	Branch Piece, Wafer Type Lined
RECL	Reducer Concentric, Lined
REEL	Reducer Eccentric, Lined
REFL	Reducing Flange, Lined
TERL	Reducing Tee, Lined

BOLT SET FLANGED JOINTS - P

DN	No.	Inch		mm	81.38.61
25	4	1/2	×	80	*
40	4	1/2	×	90	*
50	4	5/8	×	100	*
80	4	5/8	×	110	*
100	8	5/8	×	110	*
150	8	3/4	×	130	*
200	8	3/4	×	140	*

BOLT SET RED. FLG. L.S.FLG. - P

DN	No.	Inch		mm	81.38.61
40	4	1/2	×	100	*
50	4	5/8	×	110	*
80	4	5/8	×	120	*
100	8	5/8	×	130	*
150	8	3/4	×	140	*
200	8	3/4	×	150	*

BOLT SET RED. FLG. S.SIDE - P

DN	No.	Inch		mm	81.38.61
25	4	1/2	×	70	*
40	4	1/2	×	80	*
50	4	5/8	×	90	*
80	4	5/8	×	100	*
100	8	5/8	×	100	*
150	8	3/4	×	110	*

BOLT SET RED. FLG. L.S.TAP - P

DN	No.	Inch		mm	81.38.61
40	4	1/2	×	90	*
50	4	5/8	×	100	*
80	4	5/8	×	110	*
100	8	5/8	×	120	*
150	8	3/4	×	120	*
200	8	3/4	×	130	*

BOLT SET BRANCH PIECES-P

DN	No.	Inch		mm	81.38.61
25	4	1/2	×	150	*
40	4	1/2	×	160	*
50	4	5/8	×	170	*
80	4	5/8	×	190	*
100	8	5/8	×	190	*
150	8	3/4	×	210	*
200	8	3/4	×	220	*

BOLT SET SPACER L = 10 - P

DN	No.	Inch		mm	81.38.61
25	4	1/2	×	90	*
40	4	1/2	×	100	*
50	4	5/8	×	110	*
80	4	5/8	×	120	*
100	8	5/8	×	130	*
150	8	3/4	×	140	*
200	8	3/4	×	150	*

BOLT SET SPACER L = 15 - P

DN	No.	Inch		mm	81.38.61
25	4	1/2	×	90	*
40	4	1/2	×	100	*
50	4	5/8	×	120	*
80	4	5/8	×	130	*
100	8	5/8	×	130	*
150	8	3/4	×	140	*
200	8	3/4	×	150	*

BOLT SET SPACER L = 20 - P

DN	No.	Inch		mm	81.38.61
25	4	1/2	×	95	*
40	4	1/2	×	105	*
50	4	5/8	×	120	*
80	4	5/8	×	130	*
100	8	5/8	×	130	*
150	8	3/4	×	145	*
200	8	3/4	×	160	*

Class No.: 0 AZ04	Page: 5	Content: Bolting and Assemblies

BOLT SET SPACER L = 25 – P

DN	No.	Inch		mm	81.38.61
25	4	1/2	×	100	*
40	4	1/2	×	110	*
50	4	5/8	×	130	*
80	4	5/8	×	135	*
100	8	5/8	×	135	*
150	8	3/4	×	150	*
200	8	3/4	×	170	*

BOLT SET SPACER L = 30 - P

DN	No.	Inch		mm	81.38.61
25	4	1/2	×	110	*
40	4	1/2	×	120	*
50	4	5/8	×	130	*
80	4	5/8	×	150	*
100	8	5/8	×	150	*
150	8	3/4	×	160	*
200	8	3/4	×	170	*

BOLT SET SPACER L = 35 - P

DN	No.	Inch		mm	81.38.61
25	4	1/2	×	110	*
40	4	1/2	×	120	*
50	4	5/8	×	135	*
80	4	5/8	×	150	*
100	8	5/8	×	150	*
150	8	3/4	×	160	*
200	8	3/4	×	170	*

BOLT SET SPACER L = 40 - P

DN	No.	Inch		mm	81.38.61
25	4	1/2	×	120	*
40	4	1/2	×	125	*
50	4	5/8	×	150	*
80	4	5/8	×	150	*
100	8	5/8	×	150	*
150	8	3/4	×	170	*
200	8	3/4	×	180	*

BOLT SET SPACER L = 50 - P

DN	No.	Inch		mm	81.38.61
25	4	1/2	×	125	*
40	4	1/2	×	135	*
50	4	5/8	×	150	*
80	4	5/8	×	170	*
100	8	5/8	×	170	*
150	8	3/4	×	180	*
200	8	3/4	×	190	*

BOLT SET SPACER L = 60 – P

DN	No.	Inch		mm	81.38.61
25	4	1/2	×	135	*
40	4	1/2	×	150	*
50	4	5/8	×	170	*
80	4	5/8	×	170	*
100	8	5/8	×	170	*
150	8	3/4	×	190	*
200	8	3/4	×	210	*

BOLT SET SPACER L = 70 - P

DN	No.	Inch		mm	81.38.61
25	4	1/2	×	150	*
40	4	1/2	×	160	*
50	4	5/8	×	170	*
80	4	5/8	×	180	*
100	8	5/8	×	180	*
150	8	3/4	×	195	*
200	8	3/4	×	210	*

BOLT SET SPACER L = 80 - P

DN	No.	Inch		mm	81.38.61
25	4	1/2	×	160	*
40	4	1/2	×	170	*
50	4	5/8	×	180	*
80	4	5/8	×	190	*
100	8	5/8	×	190	*
150	8	3/4	×	210	*
200	8	3/4	×	220	*

BOLT SET SPACER L = 90 - P

DN	No.	Inch		mm	81.38.61
25	4	1/2	×	170	*
40	4	1/2	×	170	*
50	4	5/8	×	190	*
80	4	5/8	×	210	*
100	8	5/8	×	210	*
150	8	3/4	×	220	*
200	8	3/4	×	230	*

BOLTSET SPACER L = 100 - P

DN	No.	Inch		mm	81.38.61
50	4	5/8	×	210	*
80	4	5/8	×	210	*
100	8	5/8	×	210	*
150	8	3/4	×	230	*
200	8	3/4	×	240	*

Class No.: AZ05	Page: 1	Content: General
Base Material: Carbon Steel Galvanized	First Issue: Revision:	
Rating: PN 20 (Class 150)	Date:	
Corrosion Allowance: 0 mm	Sign:	

Temperature °C		0	60
urePress Barg.	DN 15-400	16.0	16.0

TABLE OF SCHEDULES

DN	Schedule
15	80
20	80
80	40
100	40
150	40
200	30
250	30
300	30
350	30
400	30

BRANCH CONNECTIONS 90 DEGREES

BRANCH SIZE

Run Size	15	20	80	100	150	200	250	300	350	400
400	-	-	D	D	D	D	D	D	D	A
350	-	-	D	D	D	D	D	D	A	
300	-	-	D	D	D	D	D	A		
250	-	-	D	D	D	D	A			
200	-	-	D	D	D	A				
150	-	-	D	D	A					
100	-	-	D	A						
80	-	-	A							

Notes:

-Design limits are acc. butterfly valve rating BS5155
- After shop fabrication, pipe spools shall be galvanized in accordance with ASTM A53
- Pre-fabricated pipe spools shall have flanged ends and be limited to L- or Z- shapes.
- Drain holes (6 mm.) to be drilled before galvanizing
- For pipes, fittings and flanges, sizes DN 50 and smaller use class AZ01
- Application of other types of branch connections shall be subject to prior approval of company.

CODE	EXPLANATION OF CHARACTERS
A	Equal tee
D	Pipe to pipe
---	Branch connection to be of the type branch fitting threaded-end outlet.

Class No.: AZ05	Page: 2	Content: Material Descriptions

* PIPE

PIPE	Pipe	DN	15-400	ASTM A106-B
PNTT	Pipe Nipple Thrd. Ends L = 50 mm	DN	15-50	ASTM A105, Hot Dip Galvanized To: ASTM A153-B or BS 729
PNPT	Pipe Nipple Plain/Thrd. Ends	DN	15-50	ASTM A105, Hot Dip Galvanized To: ASTM A153-B or BS 729

* FLANGES

BLFL	Blind Flange	DN	15-400	ASTM A105, Hot Dip Galvanized To: ASTM A153-B or BS 729
WNFL	Welding Neck Flange	DN	15-400	ASTM A105

* FITTINGS

CAPB	Cap Butt-Weld. End		DN	15-400	ASTM A234-WPB
COUT	Coupling Threaded Ends		DN	15-50	ASTM A105, Hot Dip Galvanized To: ASTM A153-B or BS 729
E45B	Elbow 45 Deg.	Butt-Weld. Ends	DN	15-400	ASTM A234-WPB
E90B	Elbow 90 Deg.	Butt-Weld. Ends	DN	15-400	ASTM A234-WPB
E90T	Elbow 90 Deg.	Threaded Ends	DN	15-50	ASTM A105, Hot Dip Galvanized To: ASTM A153-B or BS 729
TEEB	Equal Tee	Butt-Weld. End	DN	15-400	ASTM A234-WPB

* REDUCING FITTINGS

BNIT	Branch Fitting Threaded Outlet	DN	15-50	ASTM	A105
RECB	Reducer Conc. Butt-Weld. Ends	DN	20-400	ASTM	A234-WPB
REEB	Reducer Ecc. Butt-Weld. Ends	DN	20-400	ASTM	A234-WPB

Note:
For full material description see relevant MESC buying description.

* VALVES

BARP	Ball Valve Red. Bore Flat Face	DN	50-100	Body/INT.: ASTM B148
BUVW	Butterfly Valve Wafer Type	DN	80-400	Body: ASTM A216-WCB/WCC, A105 Rubber Lined Disc: ASTM B148

* MISCELLANEOUS

GKRF	Gasket, Raised Face	DN	15-300	C.A.F
STBT	Stud Bolt with Nuts		---	Studs: ASTM A193-B7 Nuts: ASTM A194-2H

Class No.: AZ05	Page: 3	Content: Piping Components

ITEM DESCRIPTION		MESC	NOMINAL PIPE SIZE 15	20	80	100	150	200	250	300	350	400
* PIPE												
Pipe		74.13.11	*	*	*	*	*	*	*	*	*	*
* FLANGES												
Blind Flange		76.62.11	*	*	*	*	*	*	*	*	*	*
Welding Neck Flange		76.62.80	*	*	*	*	*	*	*	*	*	*
* FITTINGS												
Cap	Butt-Weld. Ends	76.33.18			*	*	*	*	*	*	*	*
Elbow 45 Deg.	Butt-Weld. Ends	76.33.38			*	*	*	*	*	*	*	*
Elbow 90 Deg.	Butt-Weld. Ends	76.33.40			*	*	*	*	*	*	*	*
Equal Tee	Butt-Weld. Ends	76.33.84			*	*	*	*	*	*	*	*
* VALVES												
Ball Valve Red. Bore Flat Face		75.40.08	*	*	*	*						
Butterfly Valve Wafer Type		75.72.78			*	*	*	*	*	*	*	*
* MISCELLANEOUS												
Gasket, Raised Face		85.31.02			*	*	*	*	*	*		

Class No.:	AZ05	Page:	4	Content:	Reducing Piping Components

Run		Br.	RECB 76.30.72	REFB 76.30.73
100	×	80	*	*
150	×	80	*	*
150	×	100	*	*
200	×	100	*	*
200	×	150	*	*
250	×	100	*	*
250	×	150	*	*
250	×	200	*	*
300	×	150	*	*
300	×	200	*	*
300	×	250	*	*
350	×	150	*	*
350	×	200	*	*
350	×	250	*	*
350	×	300	*	*

Run		Br.	RECB 76.29.46	REFB 76.29.6
400	×	150	*	*
400	×	200	*	*
400	×	250	*	*
400	×	300	*	*
400	×	350	*	*

Class No.: AZ05	Page: 5	Content: Bolting and Assemblies

BOLTS. WA. LUG BUTTERFLY VALVE

DN	No.	Inch		mm	81.38.61
80	4	5/8	×	150	*
100	8	5/8	×	150	*
150	8	3/4	×	160	*
200	8	3/4	×	170	*
250	12	7/8	×	190	*
300	12	7/8	×	210	*
350	12	1	×	230	*
400	16	1	×	250	*

BOLT SET FLANGED JOINTS

DN	No.	Inch		mm	81.38.61
15	4	1/2	×	60	*
20	4	1/2	×	70	*
80	4	5/8	×	100	*
100	8	5/8	×	100	*
150	8	3/4	×	100	*
200	8	3/4	×	110	*
250	12	7/8	×	120	*
300	12	7/8	×	120	*
350	12	1	×	130	*
400	16	1	×	140	*

* DRAIN POINT Fig. 2I

Run DN 80-400 Br DN 20

	No.
Branch: Table Page 1	1
Ball Valve Red. Bore Flat Face	1
Welding Neck Flange	1
Blind Flange	1
Gasket, Raised Face	2
Stud Bolt with Nuts	8

Class No.: CN01	Page: 1	Content: General
Base Material: Carbon Steel	First Issue: Revision:	
Rating: PN 50 (Class 300)	Date:	
Corrosion Allowance: 1 mm	Sign:	

Temperature °C		0	50	100	150	200	250	300	350	400
urePress Barg.	DN 15-600	50.5	50.0	46.3	45.1	43.8	41.8	38.8	36.8	32.6

TABLE OF SCHEDULES

DN	Schedule
15	80
20	80
25	80
40	80
50	40
80	40
100	40
150	40
200	30
250	30
300	30
350	30
400	30
450	30
500	30
600	30

BRANCH CONNECTIONS 90 DEGREES

BRANCH SIZE

Run Size	15	20	25	40	50	80	100	150	200	250	300	350	400	450	500	600
600	C	C	C	C	E	E	E	E	E	E	E	E	E	E	E	A
500	C	C	C	C	E	E	E	E	E	E	E	E	E	E	A	
450	C	C	C	C	E	E	E	E	E	E	E	E	E	A		
400	C	C	C	C	E	E	E	E	E	E	E	E	A			
350	C	C	C	C	E	E	E	E	E	E	E	A				
300	C	C	C	C	E	E	E	E	E	E	A					
250	C	C	C	C	E	E	E	E	E	A						
200	C	C	C	C	E	E	E	E	A							
150	C	C	C	C	E	E	E	A								
100	C	C	C	C	D	D	A									
80	C	C	C	C	D	A										
50	C	C	C	B	A											
40	C	B	B	A												
25	B	B	A													
20	B	A														
15	A															

Notes:

-Design limits are acc. flange rating ANSI B16.5 Material Group 1.1
- Piston type check valves for horizontal mounting only.
- Application of other types of branch connections is subject to company approval

CODE	EXPLANATION OF CHARACTERS
A	Equal tee
B	Reducing tee
C	Branch socket weld-end
D	Pipe to pipe
E	Branch outlet reducing butt-weld

Class No.: CN01	Page: 2	Content: Material Descriptions

* PIPE

PIPE	Pipe	DN	15-600	ASTM	A106-B
PNPP	Pipe Nipple 50 mm	DN	15-40	ASTM	A106-B

* FLANGES

BLFL	Blind Flange	DN	15-600	ASTM	A105
SBFL	Spectacle Blind Flange	DN	15-600	ASTM	A285.GRB
WNFL	Welding Neck Flange	DN	15-600	ASTM	A105

* FITTINGS

CAPB	Cap	Butt-Weld. End	DN	15-600	ASTM	A234-WPB
E45B	Elbow 45 Deg.	Butt-Weld. End	DN	15-600	ASTM	A234-WPB
E90B	Elbow 90 Deg.	Butt-Weld. End	DN	15-600	ASTM	A234-WPB
TEEB	Equal Tee	Butt-Weld. End	DN	15-600	ASTM	A234-WPB
E45S	Elbow 45 Deg.	Socket-Weld. End	DN	15-40	ASTM	A105
E90S	Elbow 90 Deg.	Socket-Weld. End	DN	15-40	ASTM	A105
TEES	Equal Tee	Socket-Weld. End	DN	15-40	ASTM	A105
COUS	Coupling	Socket-Weld. End	DN	15-40	ASTM	A105
CAPT	Cap	Threaded	DN	---	ASTM	A105

* REDUCING FITTINGS

BROS	Branch Outlet Socket weld. End	DN	15-40	ASTM	A105
BROB	Branch Outlet Red. Butt-Weld .	DN	50-500	ASTM	A105
RECB	Reducer Conc. Butt-Weld. End	DN	20-600	ASTM	A234-WPB
REEB	Reducer Ecc. Butt-Weld. End	DN	20-600	ASTM	A234-WPB
TERB	Tee Reducing Butt-Weld. End	DN	20-600	ASTM	A234-WPB
TERS	Tee Reducing Socket-Weld. End	DN	20-40	ASTM	A105

Note:
- For full material description see relevant MESC buying description.
- Where both socket weld and butt weld fittings are specified, preference is subject to company approval.

* VALVES

CHVF	Check Valve Flanged	DN	15-600	Body:	ASTM	A216-WCB/WCC, A105
				Trim:	AISI	410
CHVS	Check Valve Socket Weld. End	DN	15-40	Body:	ASTM	A216-WCB/WCC, A105
				Trim:	AISI	410
GAVF	Gate Valve Flanged	DN	15-600	Body:	ASTM	A216-WCB/WCC, A105
				Trim:	AISI	410
GAVS	Gate Valve Socket Weld. End	DN	15-40	Body:	ASTM	A216-WCB/WCC, A105
				Trim:	AISI	410
GLVF	Globe Valve Flanged	DN	15-200	Body:	ASTM	A216-WCB/WCC, A105
				Trim:	AISI	410
GLVS	Globe Valve Socket Weld. End	DN	15-40	Body:	ASTM	A216-WCB/WCC, A105
				Trim:	AISI	410
NEVS	Globe Valve Needle Type Socket	DN	15-40	Body:	ASTM	A216-WCB/WCC, A105
				Trim:	AISI	410

* MISCELLANEOUS

GKSW	Gasket, Spiral Wound	DN	15-600	AISI 316, Asbestos Filled, CS Centring Ring.		
ORFS	Orifice Flange Set	DN	50-600		ASTM	A105
STBT	Stud Bolt with Nuts		---	Studs:	ASTM	A193-B7
				Nuts:	ASTM	A194-2H

Class No.: CN01	Page: 3	Content: Piping Components

Class No.: CN01	Page: 4	Content: Reducing Piping Components

ITEM DESCRIPTION		MESC	NOMINAL PIPE SIZE 15	20	25	40	50	80	100	150	200	250	300	350	400	450	500	600
* PIPE																		
Pipe		74.30.31	*	*	*	*	*	*	*	*	*	*	*	*	*	*	*	*
Pipe Nipple 50 mm		76.05.56	*	*	*	*												
* FLANGES																		
Blind Flange		76.62.10	*	*	*	*	*	*	*	*	*	*	*	*	*	*	*	*
Spectacle Blind Flange		76.88.06	*	*	*	*	*	*	*	*	*	*	*	*	*	*	*	*
Spacer Ring Type (ANS Flanges)		76.88.10	*	*	*	*	*	*	*	*	*	*	*	*	*	*	*	*
Welding Neck Flange		76.62.78	*	*	*	*	*	*	*	*	*	*	*	*	*	*	*	*
* FITTINGS																		
Cap	Butt-Weld. End	76.30.18	*	*	*	*	*	*	*	*	*	*	*	*	*	*	*	*
Elbow 45 Deg.	Butt-Weld. End	76.30.38	*	*	*	*	*	*	*	*	*	*	*	*	*	*	*	*
Elbow 90 Deg.	Butt-Weld. End	76.30.40	*	*	*	*	*	*	*	*	*	*	*	*	*	*	*	*
Equal Tee	Butt-Weld. End	76.30.84	*	*	*	*	*	*	*	*	*	*	*	*	*	*	*	*
Elbow 45 Deg.	Socket-Weld. End	76.34.38	*	*	*	*												
Elbow 90 Deg.	Socket-Weld. End	76.34.39	*	*	*	*												
Equal Tee	Socket-Weld. End	76.34.80	*	*	*	*												
Coupling	Socket-Weld. End	76.34.28	*	*	*	*												
Cap	Socket-Weld. End	76.05.18	*	*	*	*												
* VALVES																		
Check Valve Flanged		75.37.13	*	*	*	*	*	*	*	*	*	*	*	*	*	*	*	*
Check Valve Socket		75.56.13	*	*	*	*												
Gate Valve Flanged		75.37.33	*	*	*	*	*	*	*	*	*	*	*	*	*	*	*	*
Gate Valve Sw		75.56.35	*	*	*	*												
Globe Valve Flanged		75.37.43	*	*	*	*	*	*	*	*	*							
Globe Valve Socket		75.56.45	*	*	*	*												
Globe Valve Needle Type Socket		75.56.63	*	*	*	*												
* MISCELLANEOUS																		
Gasket, Spiral Wound		85.41.43	*	*	*	*	*	*	*	*	*	*	*	*	*	*	*	*
Orifice Flange Set		60.88.52					*	*	*	*	*	*	*	*	*	*	*	*

Run	Br.	BROB 76.80.00	RECB 76.30.70	REEB 76.30.71	TERB 76.30.85	TERS 76.34.85
20 ×	15		*	*	*	*
25 ×	15		*	*	*	*
25 ×	20		*	*	*	*
40 ×	15				*	*
40 ×	20		*	*	*	*
40 ×	25		*	*	*	*
50 ×	25		*	*		
50 ×	40		*	*		
80 ×	40		*	*		
80 ×	50	*	*	*	*	
100 ×	50	*	*	*	*	
100 ×	80	*	*	*	*	
150 ×	50	*				
150 ×	80	*	*	*	*	
150 ×	100	*	*	*	*	
200 ×	50	*				
200 ×	80	*				
200 ×	100	*	*	*	*	
200 ×	150	*	*	*	*	
250 ×	50	*				
250 ×	80	*				
250 ×	100	*			*	
250 ×	150	*	*	*	*	
250 ×	200	*	*	*	*	
300 ×	50	*				
300 ×	80	*				
300 ×	100	*				
300 ×	150	*	*	*	*	
300 ×	200	*	*	*	*	
300 ×	250	*	*	*	*	
350 ×	50	*				
350 ×	80	*				
350 ×	100	*				
350 ×	150	*			*	
350 ×	200	*	*	*	*	
350 ×	250	*	*	*	*	
350 ×	300	*	*	*	*	

Run	Br.	BROB 76.80.00	RECB 76.30.70	REEB 76.30.71	TERB 76.30.85
400 ×	50	*			
400 ×	80	*			
400 ×	100	*			
400 ×	150	*			
400 ×	200	*	*	*	*
400 ×	250	*	*	*	*
400 ×	300	*	*	*	*
400 ×	350	*	*	*	*
450 ×	50	*			
450 ×	80	*			
450 ×	100	*			
450 ×	150	*			
450 ×	200	*			*
450 ×	250	*	*	*	*
450 ×	300	*	*	*	*
450 ×	350	*	*	*	*
450 ×	400	*	*	*	*
500 ×	50	*			
500 ×	80	*			
500 ×	100	*			
500 ×	150	*			
500 ×	200	*			*
500 ×	250	*			*
500 ×	300	*	*	*	*
500 ×	350	*	*	*	*
500 ×	400	*	*	*	*
500 ×	450	*	*	*	*
600 ×	50	*			
600 ×	80	*			
600 ×	100	*			
600 ×	150	*			
600 ×	200	*			
600 ×	250	*			*
600 ×	300	*			*
600 ×	350	*			*
600 ×	400	*	*	*	*
600 ×	450	*	*	*	*
600 ×	500	*	*	*	*

COMP. NAME	DESCRIPTION
BROS	Branch Fitting Outlet Socket Weld. End
BROB	Branch Outlet Red. Butt-Weld
RECB	Reducer Conc. Butt-Weld. End
REEB	Reducer Ecc. Butt-Weld. End
TERB	Tee Reducing Butt-Weld. End
TERS	Tee Reducing Socket-Weld. End

Br.	Run-Pipe	BROS 76.80.26
15	40-150	*
	200-600	*
20	50-80	*
	100-600	*
25	50	*
	80-100	*
	150-600	*
40	80-100	*
	150-300	*
	350-600	*

Class No.: CN01	Page: 5	Content: Bolting and Assemblies

BOLT SET FLANGED JOINTS

DN	No.	Inch		mm	81.38.61
15	4	1/2	×	70	*
20	4	5/8	×	75	*
25	4	5/8	×	80	*
40	4	3/4	×	90	*
50	8	5/8	×	90	*
80	8	3/4	×	110	*
100	8	3/4	×	115	*
150	12	3/4	×	125	*
200	12	7/8	×	140	*
250	16	1	×	160	*
300	16	1-1/8	×	170	*
350	20	1-1/8	×	180	*
400	20	1-1/4	×	190	*
450	24	1-1/4	×	195	*
500	24	1-1/4	×	210	*
600	24	1-1/2	×	240	*

BOLT SET SPECTACLE/SPACER

DN	No.	Inch		mm	81.38.61
15	4	1/2	×	75	*
20	4	5/8	×	85	*
25	4	5/8	×	90	*
40	4	3/4	×	100	*
50	8	5/8	×	100	*
80	8	3/4	×	120	*
100	8	3/4	×	130	*
150	12	3/4	×	145	*
200	12	7/8	×	170	*
250	16	1	×	190	*
300	16	1-1/8	×	205	*
350	20	1-1/8	×	215	*
400	20	1-1/4	×	235	*
450	24	1-1/4	×	245	*
500	24	1-1/4	×	260	*
600	24	1-1/2	×	300	*

BOLT SET ORIFICE FLANGES

DN	No.	Inch		mm	81.38.61
15	4	5/8	×	120	*
20	4	5/8	×	120	*
25	4	5/8	×	120	*
40	4	3/4	×	130	*
50	8	5/8	×	150	*
80	8	3/4	×	150	*
100	12	3/4	×	140	*
150	12	3/4	×	140	*
200	12	7/8	×	150	*
250	16	1	×	170	*
300	16	1-1/8	×	190	*
350	20	1-1/8	×	195	*
400	20	1-1/4	×	210	*
450	24	1-1/4	×	220	*
500	24	1-1/4	×	230	*
600	24	1-1/2	×	260	*

* DRAIN POINT	Fig. 0B		
Run	DN 15-25	Br	DN 15
Run	DN 40	Br	DN 20
			No.
Branch: Table Page 1			1
Cap Threaded			1
Gate Valve Sw			1
Pipe Nipple 50 mm			1
Pipe Nipple Plain/Threaded			1

* DRAIN POINT	Fig. 0B		
Run	DN 50-600	Br	DN 20
			No.
Branch: Table Page 1			1
Cap Threaded			1
Gate Valve Sw			1
Pipe Nipple Plain/Threaded			1
Pipe Nipple 50 mm			1

* VENT POINT	Fig. 1B		
Run	DN 15-25	Br	DN 15
Run	DN 40	Br	DN 20
			No.
Branch: Table Page 1			1
Cap Threaded			1
Globe Valve Socket			1
Pipe Nipple 50 mm			1
Pipe Nipple Plain/Threaded			1

* VENT POINT	Fig. 1B		
Run	DN 50-600	Br	DN 20
			No.
Branch: Table Page 1			1
Cap Threaded			1
Globe Valve Socket			1
Pipe Nipple Plain/Threaded			1
Pipe Nipple 50 mm			1

Class No.: CN02	Page: 1	Content: General
Base Material: Carbon Steel	First Issue: Revision:	
Rating: PN 50 (Class 300)	Date:	
Corrosion Allowance: 1 mm	Sign:	

Temperature °C		0	50	75	100	125	150	175	200
urePress Barg.	DN 15-80	50.0	49.0	48.0	46.4	38.0	29.0	20.0	11.0
	DN 100-150	42.0	42.0	42.0	39.0	32.0	24.0	17.0	9.0
	DN 200-600	31.0	31.0	31.0	29.0	23.0	18.0	12.0	7.0

TABLE OF SCHEDULES

DN	Schedule
15	80
20	80
25	80
40	80
50	40
80	40
100	40
150	40
200	30
250	30
300	30
350	30
400	30
450	30
500	30
600	30

BRANCH CONNECTIONS 90 DEGREES

Run Size	BRANCH SIZE 15	20	25	40	50	80	100	150	200	250	300	350	400	450	500	600
600	C	C	C	C	E	E	E	E	E	E	E	E	E	E	E	A
500	C	C	C	C	E	E	E	E	E	E	E	E	E	E	A	
450	C	C	C	C	E	E	E	E	E	E	E	E	E	A		
400	C	C	C	C	E	E	E	E	E	E	E	E	A			
350	C	C	C	C	E	E	E	E	E	E	E	A				
300	C	C	C	C	E	E	E	E	E	E	A					
250	C	C	C	C	E	E	E	E	E	A						
200	C	C	C	C	E	E	E	E	A							
150	C	C	C	C	E	E	E	A								
100	C	C	C	C	D	D	A									
80	C	C	C	C	D	A										
50	C	C	C	B	A											
40	C	B	B	A												
25	B	B	A													
20	B	A														
15	A															

Notes:

-Design limits are acc. flange rating ANSI B16.5 Material Group 1.1 and ball valve rating acc. BS 5351
- Piston type check valves for horizontal mounting only.
- Application of other types of branch connections is subject to company approval

CODE	EXPLANATION OF CHARACTERS
A	Equal tee
B	Reducing tee
C	Branch fitting outlet socket weld end
D	Pipe to pipe
E	Branch outlet reducing butt-weld

Class No.: CN02	Page: 2	Content: Material Descriptions

* PIPE

PIPE	Pipe	DN	15-400	API	5L-B (Seamless)
		DN	450-600	API	5L-B (Welded)
PNPP	Pipe Nipple 50 mm	DN	15-40	ASTM	5L-B (Seamless)

* FLANGES

BLFL	Blind Flange	DN	15-600	ASTM	A105
SBFL	Spectacle Blind Flange	DN	15-600	ASTM	A285 GRB
SOFL	Slip-On Flange	DN	15-600	ASTM	A105
WNFL	Welding Neck Flange	DN	15-600	ASTM	A105

* FITTINGS

CAPB	Cap	Butt-Weld. End	DN	15-600	ASTM	A234-WPB
E45B	Elbow 45 Deg.	Butt-Weld. End	DN	15-600	ASTM	A234-WPB
E90B	Elbow 90 Deg.	Butt-Weld. End	DN	15-600	ASTM	A234-WPB
TEEB	Equal Tee	Butt-Weld. End	DN	15-600	ASTM	A234-WPB
E45S	Elbow 45 Deg.	Socket-Weld. End	DN	15-40	ASTM	A105
E90S	Elbow 90 Deg.	Socket-Weld. End	DN	15-40	ASTM	A105
TEES	Equal Tee	Socket-Weld. End	DN	15-40	ASTM	A105
COUS	Coupling	Socket-Weld. End	DN	15-40	ASTM	A105
CAPS	Cap	Socket-Weld. End	DN	15-40	ASTM	A105

* REDUCING FITTINGS

BROS	Branch Outlet Socket Weld. End	DN	15-40	ASTM	A105
BROB	Branch Outlet Red. Butt-Weld .	DN	50-600	ASTM	A105
RECB	Reducer Conc. Butt-Weld. End	DN	20-600	ASTM	A234-WPB
REEB	Reducer Ecc. Butt-Weld. End	DN	20-600	ASTM	A234-WPB
TERB	Tee Reducing Butt-Weld. End	DN	20-600	ASTM	A234-WPB
TERS	Tee Reducing Socket-Weld. End	DN	20-40	ASTM	A105

Note:
- For full material description see relevant MESC buying description.
- Where both socket weld and butt weld fittings are specified, preference is subject to company approval.

* VALVES

BARF	Ball Valve Red. Bore Flanged	DN 15-250	Body:	ASTM	A216-WCB/WCC, A105
			Ball/Stem:		AISI 316, 316L
			Seats:	PTFE	
CHVF	Check Valve Flanged	DN 15-600	Body:	ASTM	A216-WCB/WCC, A105
			Trim:	AISI	410
CHVS	Check Valve Socket	DN 15-40	Body:	ASTM	A216-WCB/WCC, A105
			Trim:	AISI	410
GAVF	Gate Valve Flanged	DN 15-600	Body:	ASTM	A216-WCB/WCC, A105
			Trim:	AISI	410
GLVF	Globe Valve Flanged	DN 15-200	Body:	ASTM	A216-WCB/WCC, A105
			Trim:	AISI	410
GLVS	Globe Valve Socket	DN 15-40	Body:	ASTM	A216-WCB/WCC, A105
			Trim:	AISI	410
NEVS	Globe Valve Needle Type Socket	DN 15-40	Body:	ASTM	A216-WCB/WCC, A105
			Trim:	AISI	410

* MISCELLANEOUS

GKRF	Gasket, Raised Face	DN 15-600	CAF, Oil Resistant		
ORFS	Orifice Flange Set	DN 50-600		ASTM	A105
STBT	Stud Bolt with Nuts	---	Studs:	ASTM	A193-B7
			Nuts:	ASTM	A194-2H

Class No.: CN02	Page: 3	Content: Piping Components

ITEM DESCRIPTION		MESC	NOMINAL PIPE SIZE 15	20	25	40	50	80	100	150	200	250	300	350	400	450	500	600
* PIPE																		
Pipe		74.13.21	*	*	*	*	*	*	*	*	*	*	*	*	*			
		74.13.23														*	*	*
Pipe Nipple 50 mm		76.05.58	*	*	*	*												
* FLANGES																		
Blind Flange		76.62.10	*	*	*	*	*	*	*	*	*	*	*	*	*	*	*	*
Spectacle Blind Flange		76.88.06	*	*	*	*	*	*	*	*	*	*	*	*	*	*	*	*
Slip-On Flange		76.62.30	*	*	*	*	*	*	*	*	*	*	*	*	*	*	*	*
Welding Neck Flange		76.62.79	*	*	*	*	*	*	*	*	*	*	*	*	*	*	*	*
* FITTINGS																		
Cap	Butt-Weld. End	76.30.18	*	*	*	*	*	*	*	*	*	*	*	*	*	*	*	*
Elbow 45 Deg.	Butt-Weld. End	76.30.38	*	*	*	*	*	*	*	*	*	*	*	*	*	*	*	*
Elbow 90 Deg.	Butt-Weld. End	76.30.40	*	*	*	*	*	*	*	*	*	*	*	*	*	*	*	*
Equal Tee	Butt-Weld. End	76.30.84	*	*	*	*	*	*	*	*	*	*	*	*	*	*	*	*
Elbow 45 Deg.	Socket-Weld. End	76.34.38	*	*	*	*												
Elbow 90 Deg.	Socket-Weld. End	76.34.39	*	*	*	*												
Equal Tee	Socket-Weld. End	76.34.84	*	*	*	*												
Coupling	Socket-Weld. End	76.34.28	*	*	*	*												
Cap Thrd.	Thrd-Ins.	76.05.18	*	*	*	*												
* VALVES																		
Ball Valve Red. Bore Flanged		75.72.00	*	*	*	*	*	*	*	*	*	*						
Check Valve Flanged		75.37.13	*	*	*	*	*	*	*	*	*	*	*	*	*	*	*	*
Check Valve Socket		75.56.13	*	*	*	*												
Gate Valve Flanged		75.37.33	*	*	*	*	*	*	*	*	*	*	*	*	*	*	*	*
Gate Valve Socket		75.56.35	*	*	*	*												
Globe Valve Flanged		75.37.43	*	*	*	*	*	*	*	*	*							
Globe Valve Socket		75.56.45	*	*	*	*												
Globe Valve Needle Type Socket		75.56.63	*	*	*	*												
* MISCELLANEOUS																		
Gasket, CAF		85.31.17	*	*	*	*	*	*	*	*	*	*	*	*	*	*	*	*
Orifice Flange Set		60.88.52					*	*	*	*	*	*	*	*	*	*	*	*

Run	Br.	BROB 76.80.00	RECB 76.30.70	REEB 76.30.73	TERB 76.30.85	TERS 76.34.85
20 ×	15		*	*	*	*
25 ×	15		*	*	*	*
25 ×	20		*	*	*	*
40 ×	15				*	*
40 ×	20		*	*	*	*
40 ×	25		*	*	*	*
50 ×	25		*	*		
50 ×	40		*	*		
80 ×	40		*	*		
80 ×	50	*	*	*	*	
100 ×	50	*	*	*	*	
100 ×	80	*	*	*	*	
150 ×	50	*				
150 ×	80	*	*	*	*	
150 ×	100	*	*	*	*	
200 ×	50	*				
200 ×	80	*				
200 ×	100	*	*	*	*	
200 ×	150	*	*	*	*	
250 ×	50	*				
250 ×	80	*				
250 ×	100	*			*	
250 ×	150	*	*	*	*	
250 ×	200	*	*	*	*	
300 ×	50	*				
300 ×	80	*				
300 ×	100	*				
300 ×	150	*	*	*	*	
300 ×	200	*	*	*	*	
300 ×	250	*	*	*	*	
350 ×	50	*				
350 ×	80	*				
350 ×	100	*				
350 ×	150	*			*	
350 ×	200	*	*	*	*	
350 ×	250	*	*	*	*	
350 ×	300	*	*	*	*	

Run	Br.	BROB 76.80.00	RECB 76.30.70	REEB 76.30.73	TERB 76.30.85
400 ×	50	*			
400 ×	80	*			
400 ×	100	*			
400 ×	150	*			
400 ×	200	*	*	*	*
400 ×	250	*	*	*	*
400 ×	300	*	*	*	*
400 ×	350	*	*	*	*
450 ×	50	*			
450 ×	80	*			
450 ×	100	*			
450 ×	150	*			
450 ×	200	*			
450 ×	250	*	*	*	
450 ×	300	*	*	*	
450 ×	350	*	*	*	
450 ×	400	*	*	*	
500 ×	50	*			
500 ×	80	*			
500 ×	100	*			
500 ×	150	*			
500 ×	200	*			
500 ×	250	*			
500 ×	300	*	*	*	
500 ×	350	*	*	*	
500 ×	400	*	*	*	
500 ×	450	*	*	*	*
600 ×	50	*			
600 ×	80	*			
600 ×	100	*			
600 ×	150	*			
600 ×	200	*			
600 ×	250	*			
600 ×	300	*			
600 ×	350	*			
600 ×	400	*	*	*	
600 ×	450	*	*	*	*
600 ×	500	*	*	*	*

COMP. NAME	DESCRIPTION
BROS	Branch Fitting Outlet Socket Weld. End
BROB	Branch Outlet Red. Butt-Weld
RECB	Reducer Conc. Butt-Weld. End
REEB	Reducer Ecc. Butt-Weld. End
TERB	Tee Reducing Butt-Weld. End
TERS	Tee Reducing Socket-Weld. End

Br.	Run-Pipe	BROS 76.80.26
15	40-150	*
	200-600	*
20	50-80	*
	100-600	*
25	50	*
	80-100	*
	150-600	*
40	80-100	*
	150-300	*
	350-600	*

Class No.: CN02	Page: 5	Content: Bolting and Assemblies

BOLT SET FLANGED JOINTS

DN	No.	Inch		mm	81.38.61
15	4	1/2	×	70	*
20	4	5/8	×	75	*
25	4	5/8	×	80	*
40	4	3/4	×	90	*
50	8	5/8	×	90	*
80	8	3/4	×	110	*
100	8	3/4	×	115	*
150	12	3/4	×	125	*
200	12	7/8	×	140	*
250	16	1	×	160	*
300	16	1-1/8	×	170	*
350	20	1-1/8	×	180	*
400	20	1-1/4	×	190	*
450	24	1-1/4	×	195	*
500	24	1-1/4	×	210	*
600	24	1-1/2	×	235	*

BOLT SET SPECTACLE/SPACER

DN	No.	Inch		mm	81.38.61
15	4	1/2	×	75	*
20	4	5/8	×	85	*
25	4	5/8	×	90	*
40	4	3/4	×	100	*
50	8	5/8	×	100	*
80	8	3/4	×	120	*
100	8	3/4	×	130	*
150	12	3/4	×	145	*
200	12	7/8	×	170	*
250	16	1	×	190	*
300	16	1-1/8	×	205	*
350	20	1-1/8	×	215	*
400	20	1-1/4	×	235	*
450	24	1-1/4	×	245	*
500	24	1-1/4	×	260	*
600	24	1-1/2	×	295	*

BOLT SET ORIFICE FLANGES

DN	No.	Inch		mm	81.38.61
15	4	5/8	×	120	*
20	4	5/8	×	120	*
25	4	5/8	×	120	*
40	4	3/4	×	130	*
50	8	5/8	×	150	*
80	8	3/4	×	150	*
100	12	3/4	×	140	*
150	12	3/4	×	140	*
200	12	7/8	×	150	*
250	16	1	×	170	*
300	16	1-1/8	×	190	*
350	20	1-1/8	×	195	*
400	20	1-1/4	×	210	*
450	24	1-1/4	×	220	*
500	24	1-1/4	×	230	*
600	24	1-1/2	×	260	*

* DRAIN POINT	Fig. 2I		
Run	DN 15-25	Br	DN 15
Run	DN 40	Br	DN 20

	No.
Branch: Table Page 1	1
Ball Valve Red. Bore Flanged	1
Blind Flange	1
Gasket Raised Face	2
Stud Bolt with Nuts	8
Welding Neck Flange	1

* DRAIN POINT	Fig. 2J		
Run	DN 50-600	Br	DN 20

	No.
Branch: Table Page 1	1
Ball Valve Red. Bore Flanged	1
Blind Flange	1
Gasket Raised Face	2
Pipe Nipple 50 mm	1
Stud Bolt with Nuts	8
Welding Neck Flange	1

* VENT POINT	Fig. 1I		
Run	DN 15-25	Br	DN 15
Run	DN 40	Br	DN 20

	No.
Branch: Table Page 1	1
Blind Flange	1
Gasket Raised Face	2
Globe Valve Flanged	1
Stud Bolt with Nuts	8
Welding Neck Flange	1

* VENT POINT	Fig. 1 J		
Run	DN 50-600	Br	DN 20

	No.
Branch: Table Page 1	1
Blind Flange	1
Gasket Raised Face	2
Globe Valve Flanged	1
Pipe Nipple 50 mm	1
Stud Bolt with Nuts	8
Welding Neck Flange	1

Class No.: CN04	Page: 1	Content: General
Base Material: Carbon Steel	First Issue: Revision:	
Rating: PN 50 (Class 300)	Date:	
Corrosion Allowance: 1 mm	Sign:	

Temperature °C		0	50	100	150	200	250	300	350	400
urePress Barg.	DN 15-600	50.5	50.0	46.3	45.1	43.8	41.8	38.8	36.8	32.6

TABLE OF SCHEDULES

DN	Schedule
15	80
20	80
25	80
40	80
50	40
80	40
100	40
150	40
200	30
250	30
300	30
350	30
400	30
450	30
500	30
600	30

BRANCH CONNECTIONS 90 DEGREES

Run Size	BRANCH SIZE 15	20	25	40	50	80	100	150	200	250	300	350	400	450	500	600
600	C	C	C	C	E	E	E	E	E	E	E	E	E	E	E	A
500	C	C	C	C	E	E	E	E	E	E	E	E	E	E	A	
450	C	C	C	C	E	E	E	E	E	E	E	E	E	A		
400	C	C	C	C	E	E	E	E	E	E	E	E	A			
350	C	C	C	C	E	E	E	E	E	E	E	A				
300	C	C	C	C	E	E	E	E	E	E	A					
250	C	C	C	C	E	E	E	E	E	A						
200	C	C	C	C	E	E	E	E	A							
150	C	C	C	C	E	E	E	A								
100	C	C	C	C	D	D	A									
80	C	C	C	C	D	A										
50	C	C	C	B	A											
40	C	B	B	A												
25	B	B	A													
20	B	A														
15	A															

Notes:

-Design limits are acc. flange rating ANSI B16.5 Material Group 1.1 and to allowable internal prisor acc. ANSI B31.3
- Piston type check valves for horizontal mounting only.
- Application of other types of branch connections is subject to company approval

CODE	EXPLANATION OF CHARACTERS
A	Equal tee
B	Reducing tee
C	Branch fitting outlet socket weld
D	Pipe to pipe
E	Branch outlet reducing butt-weld

Class No.: CN04	Page: 2	Content: Material Descriptions

* PIPE

PIPE	Pipe	DN	15-600	ASTM	A106-B
PNPP	Pipe Nipple 50 mm	DN	15-40	ASTM	A106-B

* FLANGES

BLFL	Blind Flange	DN	15-600	ASTM	A105
SBFL	Spectacle Blind Flange	DN	15-600	ASTM	A516-60
SPRT	Spacer Ring Type (ANS Flanges)	DN	15-600	ASTM	A516-60
WNFL	Welding Neck Flange	DN	15-600	ASTM	A105

* FITTINGS

CAPB	Cap	Butt-Weld. End	DN	15-600	ASTM	A234-WPB
E45B	Elbow 45 Deg.	Butt-Weld. End	DN	15-600	ASTM	A234-WPB
E90B	Elbow 90 Deg.	Butt-Weld. End	DN	15-600	ASTM	A234-WPB
TEEB	Equal Tee	Butt-Weld. End	DN	15-600	ASTM	A234-WPB
E45S	Elbow 45 Deg.	Socket-Weld. End	DN	15-40	ASTM	A105
E90S	Elbow 90 Deg.	Socket-Weld. End	DN	15-40	ASTM	A105
TEES	Equal Tee	Socket-Weld. End	DN	15-40	ASTM	A105
COUS	Coupling	Socket-Weld. End	DN	15-40	ASTM	A105
CAPS	Cap	Socket-Weld. End	DN	15-40	ASTM	A105

* REDUCING FITTINGS

BROS	Branch Fitting Outlet Socket-Weld. End	DN	15-40	ASTM	A105
BROB	Branch Outlet Red. Butt-Weld.	DN	50-600	ASTM	A105
RECB	Reducer Conc. Butt-Weld. End	DN	20-600	ASTM	A234-WPB
REEB	Reducer Ecc. Butt-Weld. End	DN	20-600	ASTM	A234-WPB
TERB	Tee Reducing Butt-Weld. End	DN	20-600	ASTM	A234-WPB
TERS	Tee Reducing Socket-Weld. End	DN	20-40	ASTM	A105

Note:
- For full material description see relevant MESC buying description.
- Where both socket weld and butt weld fittings are specified, preference is subject to company approval.

* VALVES

CHVF	Check Valve Flanged	DN	15-600	Body:	ASTM	A216-WCB/WCC, A105
				Trim:	AISI	316 (L) + Stellite 6
GAVF	Gate Valve Flanged	DN	15-600	Body:	ASTM	A216-WCB/WCC, A105
				Trim:	AISI	316 (L) + Stellite 6
GLVF	Globe Valve Flanged	DN	15-200	Body:	ASTM	A216-WCB/WCC, A105
				Trim:	AISI	316 (L) + Stellite 6

* MISCELLANEOUS

GKTI	Gasket, C.A.F., Oil Resistance	DN	15-600	Graphited		
ORFS	Orifice Flange Set	DN	50-600		ASTM	A105
STBT	Stud Bolt with Nuts		----	Studs:	ASTM	A193-B7
				Nuts:	ASTM	A194-2H

Class No.: CN04	Page: 3	Content: Piping Components

ITEM DESCRIPTION		MESC	NOMINAL PIPE SIZE 15	20	25	40	50	80	100	150	200	250	300	350	400	450	500	600
* PIPE																		
Pipe		74.30.21/31	*	*	*	*	*	*	*	*	*	*	*	*	*	*	*	*
Pipe Nipple 50 mm		76.05.00	*	*	*	*												
* FLANGES																		
Blind Flange		76.62.11	*	*	*	*	*	*	*	*	*	*	*	*	*	*	*	*
Spectacle Blind Flange		76.88.03	*	*	*	*	*	*	*	*	*	*	*	*	*	*	*	*
Spacer Ring Type (ANS Flanges)		76.88.16	*	*	*	*	*	*	*	*	*	*	*	*	*	*	*	*
Welding Neck Flange		76.62.78	*	*	*	*	*	*	*	*	*	*	*	*	*	*	*	*
* FITTINGS																		
Cap	Butt-Weld. End	76.30.18	*	*	*	*	*	*	*	*	*	*	*	*	*	*	*	*
Elbow 45 Deg.	Butt-Weld. End	76.30.38	*	*	*	*	*	*	*	*	*	*	*	*	*	*	*	*
Elbow 90 Deg.	Butt-Weld. End	76.30.39/40	*	*	*	*	*	*	*	*	*	*	*	*	*	*	*	*
Equal Tee	Butt-Weld. End	76.30.84	*	*	*	*	*	*	*	*	*	*	*	*	*	*	*	*
Elbow 45 Deg.	Socket-Weld. End	76.34.38	*	*	*	*												
Elbow 90 Deg.	Socket-Weld. End	76.34.39	*	*	*	*												
Equal Tee	Socket-Weld. End	76.34.84	*	*	*	*												
Coupling	Socket-Weld. End	76.34.28	*	*	*	*												
Cap	Socket-Weld. End	76.34.18	*	*	*	*												
* VALVES																		
Check Valve Flanged		75.37.13	*	*	*	*	*	*	*	*	*	*	*	*	*	*	*	*
Gate Valve Flanged		75.37.33	*	*	*	*	*	*	*	*	*	*	*	*	*	*	*	*
Globe Valve Flanged		75.37.43	*	*	*	*	*	*	*	*	*							
* MISCELLANEOUS																		
Gasket, C.A.F., Oil Resistance		85.31.16/17	*	*	*	*	*	*	*	*	*	*	*	*	*	*	*	*
Orifice Flange Set		60.88.52					*	*	*	*	*	*	*	*	*	*	*	*

Run	Br.	BROB 76.80.05	RECB 76.30.72	REEB 76.30.73	TERB 76.30.85	TERS 76.34.85
20 ×	15		*	*	*	*
25 ×	15		*	*	*	*
25 ×	20		*	*	*	*
40 ×	15		*	*	*	*
40 ×	20		*	*	*	*
40 ×	25		*	*	*	*
50 ×	20		*	*		*
50 ×	25		*	*		
50 ×	40		*	*	*	
80 ×	40		*	*		
80 ×	50	*	*	*	*	
100 ×	40		*	*		
100 ×	50	*	*	*	*	
100 ×	80	*	*	*	*	
150 ×	50	*				
150 ×	80	*	*	*	*	
150 ×	100	*	*	*	*	
200 ×	50	*				
200 ×	80	*				
200 ×	100	*	*	*	*	
200 ×	150	*	*	*	*	
250 ×	50	*				
250 ×	80	*				
250 ×	100	*	*	*	*	
250 ×	150	*	*	*	*	
250 ×	200	*	*	*	*	
300 ×	50*					
300 ×	80	*				
300 ×	100	*				
300 ×	150	*	*	*	*	
300 ×	200	*	*	*	*	
300 ×	250	*	*	*	*	
350 ×	50	*				
350 ×	80	*				
350 ×	100	*				
350 ×	150	*	*	*	*	
350 ×	200	*	*	*	*	
350 ×	250	*	*	*	*	
350 ×	300	*	*	*	*	

Run	Br.	BROB 76.80.05	RECB 76.30.72	REEB 76.30.73	TERB 76.30.85
400 ×	50	*			
400 ×	80	*			
400 ×	100	*			
400 ×	150	*	*	*	
400 ×	200	*	*	*	*
400 ×	250	*	*	*	*
400 ×	300	*	*	*	*
400 ×	350	*	*	*	*
450 ×	50	*			
450 ×	80	*			
450 ×	100	*			
450 ×	150	*			
450 ×	200	*	*	*	*
450 ×	250	*	*	*	*
450 ×	300	*	*	*	*
450 ×	350	*	*	*	*
450 ×	400	*	*	*	*
500 ×	50	*			
500 ×	80	*			
500 ×	100	*			
500 ×	150	*			
500 ×	200	*	*	*	*
500 ×	250	*	*	*	*
500 ×	300	*	*	*	*
500 ×	350	*	*	*	*
500 ×	400	*	*	*	*
500 ×	450	*	*	*	*
600 ×	50	*			
600 ×	80	*			
600 ×	100	*			
600 ×	150	*			
600 ×	200	*			
600 ×	250	*	*	*	*
600 ×	300	*	*	*	*
600 ×	350	*	*	*	*
600 ×	400	*	*	*	*
600 ×	450	*	*	*	*
600 ×	500	*	*	*	*

COMP. NAME	DESCRIPTION
BROS	Branch Fitting Outlet Socket-Weld. End
BROB	Branch Outlet Red. Butt-Weld
RECB	Reducer Conc. Butt-Weld. End
REEB	Reducer Ecc. Butt-Weld. End
TERB	Tee Reducing Butt-Weld. End
TERS	Tee Reducing Socket-Weld. End

BROS Br.	Run Pipe	76.80.26
15	40-150	*
	200-600	*
20	50-80	*
	100-600	*
25	50	*
	80-100	*
	150-600	*
40	80-100	*
	150-300	*
	350-600	*

Class No.: CN04	Page: 5	Content: Bolting and Assemblies

BOLT SET FLANGED JOINTS

DN	No.	Inch	mm	81.38.61
15	4	1/2	70	*
20	4	5/8	80	*
25	4	5/8	80	*
40	4	3/4	90	*
50	8	5/8	90	*
80	8	3/4	110	*
100	8	3/4	120	*
150	12	3/4	130	*
200	12	7/8	140	*
250	16	1	160	*
300	16	1-1/8	170	*
350	20	1-1/8	180	*
400	20	1-1/4	190	*
450	24	1-1/4	195	*
500	24	1-1/4	210	*
600	24	1-1/2	240	*

BOLT SET SPECTACLE/SPACER

DN	No.	Inch	mm	81.38.61
15	4	1/2	80	*
20	4	5/8	90	*
25	4	5/8	90	*
40	4	3/4	100	*
50	8	5/8	100	*
80	8	3/4	120	*
100	8	3/4	130	*
150	12	3/4	150	*
200	12	7/8	170	*
250	16	1	190	*
300	16	1-1/8	210	*
350	20	1-1/8	220	*
400	20	1-1/4	240	*
450	24	1-1/4	245	*
500	24	1-1/4	260	*
600	24	1-1/2	300	*

BOLT SET ORIFICE FLANGES

DN	No.	Inch		mm	81.38.61
15	4	5/8	×	120	*
20	4	5/8	×	120	*
25	4	5/8	×	120	*
40	4	3/4	×	130	*
50	8	5/8	×	150	*
80	8	3/4	×	150	*
100	12	3/4	×	140	*
150	12	3/4	×	140	*
200	12	7/8	×	150	*
250	16	1	×	170	*
300	16	1-1/8	×	190	*
350	20	1-1/8	×	195	*
400	20	1-1/4	×	210	*
450	24	1-1/4	×	220	*
500	24	1-1/4	×	230	*
600	24	1-1/2	×	260	*

* DRAIN POINT Fig. 0I

Run DN 15-25 Br DN 15	No.
Branch: Table Page 1	1
Blind Flange	1
Gasket CAF, Oil Resistance	2
Gate Valve Flanged	1
Stud Bolt with Nuts	8
Welding Neck Flange	1

* DRAIN POINT Fig. 0I

Run DN 40-40 Br DN 20	No.
Branch: Table Page 1	1
Blind Flange	1
Gasket CAF, Oil Resistance	2
Gate Valve Flanged	1
Stud Bolt with Nuts	8
Welding Neck Flange	1

DRAIN POINT Fig. 0J

Run DN 50-600 Br DN 20	No.
Branch: Table Page 1	1
Blind Flange	1
Gasket CAF, Oil Resistance	2
Gate Valve Flanged	1
Pipe Nipple 50 mm	1
Stud Bolt with Nuts	8
Welding Neck Flange	1

* VENT POINT Fig. 1I

Run DN 15-25 Br DN 15	No.
Branch: Table Page 1	1
Blind Flange	1
Gasket CAF, Oil Resistance	2
Globe Valve Flanged	1
Stud Bolt with Nuts	8
Welding Neck Flange	1

* VENT POINT Fig. 1I

Run DN 40-40 Br DN 20	No.
Branch: Table Page 1	1
Blind Flange	1
Gasket CAF, Oil Resistance	2
Globe Valve Flanged	1
Stud Bolt with Nuts	8
Welding Neck Flange	1

* VENT POINT Fig. 1J

Run DN 50-600 Br DN 20	No.
Branch: Table Page 1	1
Blind Flange	1
Gasket CAF, Oil Resistance	2
Globe Valve Flanged	1
Pipe Nipple 50 mm	1
Stud Bolt with Nuts	8
Welding Neck Flange	1

Class No.: CN05	Page: 1	Content: General
Base Material: Carbon Steel	First Issue: Revision:	
Rating: PN 50 (Class 300)	Date:	
Corrosion Allowance: 3 mm	Sign:	

Temperature °C		0	50	65
urePress Barg.	DN 25-50	50.0	49.0	48.4
	DN 80-100	42.0	42.0	42.0
	DN 150-150	31.0	31.0	31.0
	DN 200-300	21.0	21.0	21.0

TABLE OF SCHEDULES

DN	Schedule
15	160
20	160
25	160
40	160
50	80
80	80
100	80
150	80
200	80
250	80
300	80

BRANCH CONNECTIONS 90 DEGREES

Run Size	BRANCH SIZE 25	40	50	80	100	150	200	250	300
300	C	C	X	X	X	X	X	X	X
250	C	C	X	X	X	X	X	X	
200	C	C	X	X	X	X	X		
150	C	C	X	X	X	X			
100	C	C	X	X	X				
80	C	C	X	X					
50	C	B	A						
40	B	A							
25	A								

Notes:

- Design limits are acc. ball valve rating BS 5351
- This piping class is orginally designed for acid service.
- Standard long radius elbows DN80 and larger shall be used for sweep-in connections
- Application of other types of branch connections is subject to company approval.
- DN 15-20 piping components only to be used for short branches e.g. pressure points.

CODE	EXPLANATION OF CHARACTERS
A	Equal tee
B	Reducing tee
C	Branch fitting outlet socket weld end
X	Pipe to pipe connection to be made by sweep-in or lateral branch

Class No.: CN05	Page: 2	Content: Material Descriptions

* PIPE

PIPE	Pipe	DN	25-300	ASTM	A106-B

* FLANGES

BLFL	Blind Flange	DN	25-300	ASTM	A105
SBFL	Spectacle Blind Flange	DN	25-300	ASTM	A516-60
WNFL	Welding Neck Flange	DN	25-300	ASTM	A105

* FITTINGS

E45B	Elbow 45 Deg.	Butt-Weld. End	DN	25-300	ASTM	A234-WPB
E90B	Elbow 90 Deg.	Butt-Weld. End	DN	25-300	ASTM	A234-WPB
TEEB	Equal Tee	Butt-Weld. End	DN	25-300	ASTM	A234-WPB
E45S	Elbow 45 Deg.	Socket-Weld. End	DN	25-40	ASTM	A105
E90S	Elbow 90 Deg.	Socket-Weld. End	DN	25-40	ASTM	A105
TEES	Equal Tee	Socket-Weld. End	DN	25-40	ASTM	A105
COUS	Coupling	Socket-Weld. End	DN	25-40	ASTM	A105
CAPS	Cap	Socket-Weld. End	DN	25-40	ASTM	A105

* REDUCING FITTINGS

BROS	Branch Fitting Socket Weld Outlet	DN	25-40	ASTM	A105
RECB	Reducer Conc. Butt-Weld. End	DN	25-300	ASTM	A234-WPB
REEB	Reducer Ecc. Butt-Weld. End	DN	25-300	ASTM	A234-WPB
TERB	Tee Reducing Butt-Weld. End	DN	25-300	ASTM	A234-WPB
TERS	Tee Reducing Socket-Weld. End	DN	25-40	ASTM	A105

Note:
- For full material description see relevant MESC buying description.
- Where both socket weld and butt weld fittings are specified, preference is subject to company approval.

* VALVES

BARF	Ball Valve Full Bore Flanged	DN	25-300	Body:	ASTM	A216-WCB/WCC, A105
				Ball-Trim:		Monel
				Seats:	PTFE	
CHVF	Check Valve Flanged	DN	25-300	Body:	ASTM	A216-WCB/WCC, A105
				Trim:		Monel
GLVF	Globe Valve Flanged	DN	25-200	Body:	ASTM	A216-WCB/WCC, A105
				Trim:		Monel
PLVF	Plug Valve Flanged	DN	25-200	Body:	ASTM	A216-WCB/WCC, A105
				Plug/Stem:		ASTM B564
				Sleeve:	PTFE	

* MISCELLANEOUS

GKTI	Gasket, RF. C.A.F	DN	25-300	C.A.F		
STBT	Stud Bolt with Nuts		---	Studs:	ASTM	A193-B7
				Nuts:	ASTM	A194-2H

Class No.: CN05	Page: 3	Content: Piping Components

ITEM DESCRIPTION		MESC	NOMINAL PIPE SIZE 15	20	25	40	50	80	100	150	200	250	300
* PIPE													
Pipe		74.30.31	*	*	*	*	*	*	*	*	*	*	*
* FLANGES													
Blind Flange		76.62.10	*	*	*	*	*	*	*	*	*	*	*
Spectacle Blind Flange		76.88.06	*	*	*	*	*	*	*	*	*	*	*
Welding Neck Flange		76.62.78	*	*	*	*	*	*	*	*	*	*	*
* FITTINGS													
Elbow 45 Deg.	Butt-Weld. End	76.30.38	*	*	*	*	*	*	*	*	*	*	*
Elbow 90 Deg.	Butt-Weld. End	76.30.40	*	*	*	*	*	*	*	*	*	*	*
Equal Tee	Butt-Weld. End	76.30.84	*	*	*	*	*	*	*	*	*	*	*
Elbow 45 Deg.	Socket-Weld. End	76.34.38	*	*	*	*							
Elbow 90 Deg.	Socket-Weld. End	76.34.39	*	*	*	*							
Equal Tee	Socket-Weld. End	76.34.80	*	*	*	*							
Coupling	Socket-Weld. End	76.34.28	*	*	*	*							
Cap	Socket-Weld. End	76.34.18	*	*	*	*							
* VALVES													
Ball Valve Full Bore Flanged		75.72.00	*	*	*	*	*	*	*	*	*	*	*
Check Valve Flanged		75.37.13	*	*	*	*	*	*	*	*	*	*	*
Gate Valve Flanged		75.37.43	*	*	*	*	*	*	*	*	*		
Plug Valve Flanged		75.37.73	*	*	*	*	*	*	*	*	*		
* MISCELLANEOUS													
Gasket, RF. C.A.F		85.31.15/17	*	*	*	*	*	*	*	*	*	*	*

Class No.: CN05	Page: 4	Content: Reducing Piping Components

Run		Br.	RECB 76.30.70	REEB 76.30.71	TERS 76.34.85	TERB 76.30.85
20	×	15	*	*	*	*
25	×	15	*	*	*	*
25	×	20	*	*	*	*
40	×	20	*	*	*	*
40	×	25	*	*	*	*
50	×	25	*	*		*
50	×	40	*	*		*
80	×	40	*	*		
80	×	50	*	*		
100	×	50	*	*		
100	×	80	*	*		
150	×	50	*	*		
150	×	80	*	*		
150	×	100	*	*		
200	×	100	*	*		
200	×	150	*	*		
250	×	150	*	*		
250	×	200	*	*		
300	×	150	*	*		
300	×	200	*	*		
300	×	250	*	*		

COMP. NAME	DESCRIPTION
BROS	Branch Fitting Outlet Socket Weld. End
BROB	Branch Outlet Red. Butt-Weld
RECB	Reducer Conc. Butt-Weld. End
REEB	Reducer Ecc. Butt-Weld. End
TERB	Tee Reducing Butt-Weld. End
TERS	Tee Reducing Socket-Weld. End

Br.	Run-Pipe	BROS 76.80.26
25	50	*
	80-100	*
	150-300	*
40	80-100	*
	150-300	*

Class No.: CN05	Page: 5	Content: Bolting

BOLT SET FLANGED JOINTS

DN	No.	Inch		mm	81.38.61
15	4	1/2	×	70	*
20	4	5/8	×	75	*
25	4	5/8	×	80	*
40	4	3/4	×	90	*
50	8	5/8	×	90	*
80	8	3/4	×	110	*
100	8	3/4	×	115	*
150	12	3/4	×	125	*
200	12	7/8	×	140	*
250	16	1	×	160	*
300	16	1-1/8	×	170	*

BOLT SET SPECTACLE/SPACER

DN	No.	Inch		mm	81.38.61
15	4	1/2	×	75	*
20	4	5/8	×	85	*
25	4	5/8	×	90	*
40	4	3/4	×	100	*
50	8	5/8	×	100	*
80	8	3/4	×	120	*
100	8	3/4	×	130	*
150	12	3/4	×	145	*
200	12	7/8	×	170	*
250	16	1	×	190	*
300	16	1-1/8	×	205	*

Class No.: CN06	Page: 1	Content: General
Base Material: Carbon Steel Sour	First Issue: Revision:	
Rating: PN 50 (Class 300)	Date:	
Corrosion Allowance: 1 mm	Sign:	

Temperature °C		0	50	75	100	125	150	175	200
urePress Barg.	DN 25-50	50.0	49.0	48.0	46.3	38.0	29.0	20.0	11.0
	DN 80-150	42.0	42.0	42.0	39.0	32.0	24.0	17.0	9.0
	DN 200-600	31.0	31.0	31.0	29.0	23.0	18.0	12.0	7.0

TABLE OF SCHEDULES

DN	Schedule
15	80
20	80
25	80
40	80
50	40
80	40
100	40
150	40
200	30
250	30
300	30
350	30
400	30
450	20
500	20
600	20

BRANCH CONNECTIONS 90 DEGREES

Run Size	BRANCH SIZE 15	20	25	40	50	80	100	150	200	250	300	350	400	450	500	600
600	C	C	C	C	E	E	E	E	E	E	E	E	E	E	E	A
500	C	C	C	C	E	E	E	E	E	E	E	E	E	E	A	
450	C	C	C	C	E	E	E	E	E	E	E	E	E	A		
400	C	C	C	C	E	E	E	E	E	E	E	E	A			
350	C	C	C	C	E	D	E	E	E	E	E	A				
300	C	C	C	C	E	E	E	E	E	E	A					
250	C	C	C	C	D	D	D	D	D	A						
200	C	C	C	C	D	D	D	D	A							
150	C	C	C	C	D	D	D	A								
100	C	C	C	C	D	D	A									
80	C	C	C	C	D	A										
50	C	C	C	B	A											
40	C	B	B	A												
25	B	B	A													
20	B	A														
15	A															

Notes:

- Design limits are acc. flange rating ANSI B16.5 Material Group 1.1 and ball valve rating acc. BS 5351.
- Piston type check valves for horizontal mounting only.
- Application of other types of branch connections is subject to company approval
- Cold bending is not allowed.

CODE	EXPLANATION OF CHARACTERS
A	Equal tee
B	Reducing tee
C	Branch fitting outlet socket weld end
D	Pipe to pipe
E	Branch outlet reducing butt-weld

Class No.: CN06	Page: 2	Content: Material Descriptions

* PIPE

PIPE	Pipe	DN	15-600	ASTM	A106-B
PNPP	Pipe Nipple 50 mm	DN	15-40	ASTM	A106-B

* FLANGES

BLFL	Blind Flange	DN	15-600	ASTM	A105
SBFL	Spectacle Blind Flange	DN	15-600	ASTM	A516-60
SPRT	Spacer Ring Type (ANS Flanges)	DN	15-600	ASTM	A516-60
WNFL	Welding Neck Flange	DN	15-600	ASTM	A105

* FITTINGS

CAPB	Cap	Butt-Weld. End	DN	15-600	ASTM	A234-WPB
E45B	Elbow 45 Deg.	Butt-Weld. End	DN	15-600	ASTM	A234-WPB
E90B	Elbow 90 Deg.	Butt-Weld. End	DN	15-600	ASTM	A234-WPB
TEEB	Equal Tee	Butt-Weld. End	DN	15-600	ASTM	A234-WPB
E45S	Elbow 45 Deg.	Socket-Weld. End	DN	15-40	ASTM	A105
E90S	Elbow 90 Deg.	Socket-Weld. End	DN	15-40	ASTM	A105
TEES	Equal Tee	Socket-Weld. End	DN	15-40	ASTM	A105
COUS	Coupling	Socket-Weld. End	DN	15-40	ASTM	A105
CAPS	Cap	Socket-Weld. End	DN	15-40	ASTM	A105

* REDUCING FITTINGS

BROS	Branch Fitting Outlet Socket Weld. End	DN	15-40	ASTM	A105
BROB	Branch Outlet Red. Butt-Weld .	DN	50-600	ASTM	A105
RECB	Reducer Conc. Butt-Weld. End	DN	20-600	ASTM	A234-WPB
REEB	Reducer Ecc. Butt-Weld. End	DN	20-600	ASTM	A234-WPB
TERB	Tee Reducing Butt-Weld. End	DN	20-600	ASTM	A234-WPB
TERS	Tee Reducing Socket-Weld. End	DN	20-40	ASTM	A105

Note:
- For full material description see relevant MESC buying description.
- Where both socket weld and butt weld fittings are specified, preference is subject to company approval.

* VALVES

BARF	Ball Valve Red. Bore Flanged	DN	15-250	Body:	ASTM	A216-WCB/WCC, A105
				Ball/Stem:		AISI 316, 316L
				Seats:	PTFE	
CHVB	Check Valve Butt-Weld. End	DN	15-40	Body:	ASTM	A216-WCB/WCC, A105
				Trim:	AISI	316, 316L
CHVF	Check Valve Flanged	DN	50-600	Body:	ASTM	A216-WCB/WCC, A105
				Trim:	AISI	410
CHVS	Check Valve Socket	DN	15-40	Body:	ASTM	A216-WCB/WCC, A105
				Trim:	AISI	316, 316L
GAVB	Gate Valve Butt-Weld. End	DN	15-40	Body:	ASTM	A216-WCB/WCC, A105
				Trim:	AISI	316, 316L
GAVF	Gate Valve Flanged	DN	50-600	Body:	ASTM	A216-WCB/WCC, A105
				Trim:	AISI	410
GAVS	Gate Valve Socket	DN	15-40	Body:	ASTM	A216-WCB/WCC, A105
				Trim:	AISI	316, 316L
GLVB	Globe Valve Butt-Weld. End	DN	15-40	Body:	ASTM	A216-WCB/WCC, A105
				Trim:	AISI	316, 316L
GLVF	Globe Valve Flanged	DN	50-200	Body:	ASTM	A216-WCB/WCC, A105
				Trim:	AISI	410
GLVS	Globe Valve Socket	DN	15-400	Body:	ASTM	A216-WCB/WCC, A105
				Trim:	AISI	316, 316L

* MISCELLANEOUS

GKTI	Gasket, RF. C.A.F.	DN	15-600	C.A.F.		
ORFS	Orifice Flange Set	DN	50-600		ASTM	A105
STBT	Stud Bolt with Nuts		----	Studs:	ASTM	A193-B7M
				Nuts:	ASTM	A194-2HM

Class No.: CN06	Page: 3	Content: Piping Components

ITEM DESCRIPTION		MESC	NOMINAL PIPE SIZE 15	20	25	40	50	80	100	150	200	250	300	350	400	450	500	600
* PIPE																		
Pipe		74.30.31	*	*	*	*	*	*	*	*	*	*	*	*	*	*	*	*
Pipe Nipple 50 mm		76.05.56	*	*	*	*												
* FLANGES																		
Blind Flange		76.62.10	*	*	*	*	*	*	*	*	*	*	*	*	*	*	*	*
Spectacle Blind Flange		76.88.06	*	*	*	*	*	*	*	*	*	*	*	*	*	*	*	*
Spacer Ring Type (ANS Flanges)		76.88.00	*	*	*	*	*	*	*	*	*	*	*	*	*	*	*	*
Welding Neck Flange		76.62.79	*	*	*	*	*	*	*	*	*	*	*	*	*	*	*	*
* FITTINGS																		
Cap	Butt-Weld. End	76.30.18	*	*	*	*	*	*	*	*	*	*	*	*	*	*	*	*
Elbow 45 Deg.	Butt-Weld. End	76.30.38	*	*	*	*	*	*	*	*	*	*	*	*	*	*	*	*
Elbow 90 Deg.	Butt-Weld. End	76.30.40	*	*	*	*	*	*	*	*	*	*	*	*	*	*	*	*
Equal Tee	Butt-Weld. End	76.30.84	*	*	*	*	*	*	*	*	*	*	*	*	*	*	*	*
Elbow 45 Deg.	Socket-Weld. End	76.34.38	*	*	*	*												
Elbow 90 Deg.	Socket-Weld. End	76.34.39	*	*	*	*												
Equal Tee	Socket-Weld. End	76.34.80	*	*	*	*												
Coupling	Socket-Weld. End	76.34.28	*	*	*	*												
Cap	Socket-Weld. End	76.34.18	*	*	*	*												
* VALVES																		
Ball Valve Red. Bore Flanged		75.37.00	*	*	*	*	*	*	*	*	*	*						
Check Valve Butt-Weld. End		75.56.19	*	*	*	*												
Check Valve Flanged		75.37.13					*	*	*	*	*	*	*	*	*	*	*	*
Check Valve Socket		75.56.13	*	*	*	*												
Gate Valve Butt-Weld. End		75.56.38	*	*	*	*												
Gate Valve Flanged		75.37.33					*	*	*	*	*	*	*	*	*	*	*	*
Gate Valve Socket		75.56.35	*	*	*	*												
Globe Valve Butt-Weld. End		75.56.50	*	*	*	*												
Globe Valve Flanged		75.37.43					*	*	*	*	*							
Globe Valve Socket		75.56.45	*	*	*	*												
*MISCELLANEOUS																		
Gasket, RF. C.A.F.		85.31.15/17	*	*	*	*	*	*	*	*	*	*	*	*	*	*	*	*
Orifice Flange Set		60.88.52					*	*	*	*	*	*	*	*	*	*	*	*

Class No.: CN06	Page: 4	Content: Reducing Piping Components

Run		Br.	BROB 76.80.00	RECB 76.30.70	REEB 76.30.71	TERB 76.30.85	TERS 76.34.85
20	×	15		*	*	*	*
25	×	15		*	*	*	*
25	×	20		*	*	*	*
40	×	15		*	*	*	*
40	×	20		*	*	*	*
40	×	25		*	*	*	*
50	×	25		*	*		
50	×	40		*	*		
80	×	40		*	*		
80	×	50	*	*	*	*	
100	×	50	*	*	*	*	
100	×	80	*	*	*	*	
150	×	50	*				
150	×	80	*	*	*	*	
150	×	100	*	*	*	*	
200	×	50	*				
200	×	80	*				
200	×	100	*	*	*	*	
200	×	150	*	*	*	*	
250	×	50	*				
250	×	80	*				
250	×	100	*			*	
250	×	150	*	*	*	*	
250	×	200	*	*	*	*	
300	×	50	*				
300	×	80	*				
300	×	100	*				
300	×	150	*	*	*	*	
300	×	200	*	*	*	*	
300	×	250	*	*	*	*	
350	×	50	*				
350	×	80	*				
350	×	100	*				
350	×	150	*			*	
350	×	200	*	*	*	*	
350	×	250	*	*	*	*	
350	×	300	*	*	*	*	

Run		Br.	BROB 76.80.00	RECB 76.30.70	REEB 76.30.71	TERB 76.30.85
400	×	50	*			
400	×	80	*			
400	×	100	*			
400	×	150	*			*
400	×	200	*	*	*	*
400	×	250	*	*	*	*
400	×	300	*	*	*	*
400	×	350	*	*	*	*
450	×	50	*			
450	×	80	*			
450	×	100	*			
450	×	150	*			
450	×	200	*			*
450	×	250	*	*	*	*
450	×	300	*	*	*	*
450	×	350	*	*	*	*
450	×	400	*	*	*	*
500	×	50	*			
500	×	80	*			
500	×	100	*			
500	×	150	*			
500	×	200	*			*
500	×	250	*			*
500	×	300	*	*	*	*
500	×	350	*	*	*	*
500	×	400	*	*	*	*
500	×	450	*	*	*	*
600	×	50	*			
600	×	80	*			
600	×	100	*			
600	×	150	*			
600	×	200	*			
600	×	250	*			*
600	×	300	*			*
600	×	350	*			*
600	×	400	*	*	*	*
600	×	450	*	*	*	*
600	×	500	*	*	*	*

COMP. NAME	DESCRIPTION
BROS	Branch Fitting Outlet Socket Weld. End
BROB	Branch Outlet Red. Butt-Weld
RECB	Reducer Conc. Butt-Weld. End
REEB	Reducer Ecc. Butt-Weld. End
TERB	Tee Reducing Butt-Weld. End
TERS	Tee Reducing Socket-Weld. End

		BROS
Br.	Run-Pipe	76.80.26
15	40-150	*
	200-600	*
20	50-80	*
	100-600	*
25	50	*
	80-100	*
	150-600	*
40	80-100	*
	150-300	*
	350-600	*

Class No.: CN06	Page: 5	Content: Bolting and Assemblies

BOLT SET FLANGED JOINTS

DN	No.	Inch		mm	81.38.61
15	4	1/2	×	70	*
20	4	5/8	×	75	*
25	4	5/8	×	80	*
40	4	3/4	×	90	*
50	8	5/8	×	90	*
80	8	3/4	×	110	*
100	8	3/4	×	115	*
150	12	3/4	×	125	*
200	12	7/8	×	140	*
250	16	1	×	160	*
300	16	1-1/8	×	170	*
350	20	1-1/8	×	180	*
400	20	1-1/4	×	190	*
450	24	1-1/4	×	195	*
500	24	1-1/4	×	210	*
600	24	1-1/2	×	235	*

BOLT SET SPECTACLE/SPACER

DN	No.	Inch		mm	81.38.61
15	4	1/2	×	75	*
20	4	5/8	×	85	*
25	4	5/8	×	90	*
40	4	3/4	×	100	*
50	8	5/8	×	100	*
80	8	3/4	×	120	*
100	8	3/4	×	130	*
150	12	3/4	×	145	*
200	12	7/8	×	170	*
250	16	1	×	190	*
300	16	1-1/8	×	205	*
350	20	1-1/8	×	215	*
400	20	1-1/4	×	235	*
450	24	1-1/4	×	245	*
500	24	1-1/4	×	260	*
600	24	1-1/2	×	295	*

BOLT SET ORIFICE FLANGES

DN	No.	Inch		mm	81.38.61
15	4	5/8	×	120	*
20	4	5/8	×	120	*
25	4	5/8	×	120	*
40	4	3/4	×	130	*
50	8	5/8	×	150	*
80	8	3/4	×	150	*
100	12	3/4	×	140	*
150	12	3/4	×	140	*
200	12	7/8	×	150	*
250	16	1	×	170	*
300	16	1-1/8	×	190	*
350	20	1-1/8	×	195	*
400	20	1-1/4	×	210	*
450	24	1-1/4	×	220	*
500	24	1-1/4	×	230	*
600	24	1-1/2	×	260	*

* DRAIN POINT	Fig. 2I			
Run	DN 15-25	Br	DN 15	
Run	DN 40	Br	DN 20	No.
Branch: Table Page 1				1
Ball Valve Red. Bore Flanged				1
Blind Flange				1
Gasket RF. C.A.F.				2
Stud Bolt with Nuts				8
Welding Neck Flange				1

* DRAIN POINT	Fig. 2J			
Run	DN 50-600	Br	DN 20	No.
Branch: Table Page 1				1
Ball Valve Red. Bore Flanged				1
Blind Flange				1
Gasket RF. C.A.F.				2
Pipe Nipple 50 mm				1
Stud Bolt with Nuts				8
Welding Neck Flange				1

* VENT POINT	Fig. 1M			
Run	DN 15-25	Br	DN 15	
Run	DN 40	Br	DN 20	No.
Branch: Table Page 1				1
Blind Flange				1
Gasket RF. C.A.F.				1
Globe Valve Butt-Weld End				1
Stud Bolt with Nuts				4
Welding Neck Flange				1

* VENT POINT	Fig. 1N			
Run	DN 50-600	Br	DN 20	No.
Branch: Table Page 1				1
Blind Flange				1
Gasket RF. C.A.F.				1
Globe Valve Butt-Weld End				1
Pipe Nipple 50 mm				1
Stud Bolt with Nuts				4
Welding Neck Flange				1

Class No.: CN06	Page: 1	Content: General
Base Material: Carbon Steel Sour	First Issue: Revision:	
Rating: PN 50 (Class 300)	Date:	
Corrosion Allowance: 1 mm	Sign:	

Temperature °C		-50	0	50	75	100	125	150	175	200
urePress Barg.	DN 15-80	47.9	47.9	47.3	46.0	45.0	38.0	29.0	20.0	11.0
	DN 100-150	42.0	42.0	42.0	42.0	39.0	32.0	24.0	17.0	9.0
	DN 200-600	31.0	31.0	31.0	31.0	29.0	23.0	18.0	12.0	7.0

TABLE OF SCHEDULES

DN	Schedule
15	80
20	80
25	80
40	80
50	40
80	40
100	40
150	40
200	30
250	30
300	30
350	30
400	30
450	20
500	20
600	20

BRANCH CONNECTIONS 90 DEGREES

Run Size	BRANCH SIZE 15	20	25	40	50	80	100	150	200	250	300	350	400	450	500	600
600	C	C	C	C	E	E	E	E	E	E	E	E	E	E	E	A
500	C	C	C	C	E	E	E	E	E	E	E	E	E	E	A	
450	C	C	C	C	E	E	E	E	E	E	E	E	E	A		
400	C	C	C	C	E	E	E	E	E	E	E	E	A			
350	C	C	C	C	E	D	E	E	E	E	E	A				
300	C	C	C	C	E	E	E	E	E	E	A					
250	C	C	C	C	D	D	D	D	D	A						
200	C	C	C	C	D	D	D	D	A							
150	C	C	C	C	D	D	D	A								
100	C	C	C	C	D	D	A									
80	C	C	C	C	D	A										
50	C	C	C	B	A											
40	C	B	B	A												
25	B	B	A													
20	B	A														
15	A															

Note:

-Design limits are acc. flange rating ANSI B16.5 Material Group 1.3 and ball valve rating acc. BS 5351.
- Application of other types of branch connections is subject to company approval
- Welds, attachment welds and cold formed piping parts shall be post weld heat treated

CODE	EXPLANATION OF CHARACTERS
A	Equal tee
B	Reducing tee
C	Branch fitting outlet socket weld end
D	Pipe to pipe
E	Branch outlet reducing butt-weld

Class No.: CN07	Page: 2	Content: Material Descriptions

* PIPE

PIPE	Pipe	DN	15-400	ASTM	A333-6 (Seamless)
		DN	450-600	ASTM	A671-CC65 (Welded)
PNPP	Pipe Nipple 50 mm	DN	15-40	ASTM	A333-6 (Seamless)

* FLANGES

BLFL	Blind Flange	DN	15-400	ASTM	A350-LF2
SBFL	Spectacle Blind Flange	DN	15-400	ASTM	A516-60
SPRT	Spacer Ring Type (ANS Flanges)	DN	15-400	ASTM	A516-60
WNFL	Welding Neck Flange	DN	15-400	ASTM	A350-LF2

* FITTINGS

CAPB	Cap	Butt-Weld. End	DN	15-400	ASTM	A420-WPL6
E45B	Elbow 45 Deg.	Butt-Weld. End	DN	15-400	ASTM	A420-WPL6
E90B	Elbow 90 Deg.	Butt-Weld. End	DN	15-400	ASTM	A420-WPL6
TEEB	Equal Tee	Butt-Weld. End	DN	15-400	ASTM	A420-WPL6
E45S	Elbow 45 Deg.	Socket-Weld. End	DN	15-40	ASTM	A350-LF2
E90S	Elbow 90 Deg.	Socket-Weld. End	DN	15-40	ASTM	A350-LF2
TEES	Equal Tee	Socket-Weld. End	DN	15-40	ASTM	A350-LF2
COUS	Coupling	Socket-Weld. End	DN	15-40	ASTM	A350-LF2
CAPS	Cap	Socket-Weld. End	DN	15-40	ASTM	A350-LF2

* REDUCING FITTINGS

BROS	Branch Fitting Outlet Socket Weld. End	DN	15-40	ASTM	A350-LF2
BROB	Branch Outlet Red. Butt-Weld.	DN	50-600	ASTM	A350-LF2
RECB	Reducer Conc. Butt-Weld. End	DN	20-600	ASTM	A420-WPL6
REEB	Reducer Ecc. Butt-Weld. End	DN	20-600	ASTM	A420-WPL6
TERB	Tee Reducing Butt-Weld. End	DN	20-600	ASTM	A420-WPL6
TERS	Tee Reducing Socket-Weld. End	DN	20-40	ASTM	A350-LF2

Note:
- For full material description see relevant MESC buying description.
- Where both socket weld and butt weld fittings are specified, preference is subject to company approval.

* VALVES

BARF	Ball Valve Red. Bore Flanged	DN	15-250	Body:	ASTM	A352, A350
				Ball/Stem:		AISI 316, 316L
				Seats:	PTFE	
CHVF	Check Valve Flanged	DN	15-400	Body:	ASTM	A352, A350
				Trim:	AISI 316, 316L	
GAVF	Gate Valve Flanged	DN	15-400	Body:	ASTM	A352, A350
				Trim:	AISI 316, 316L	
GLVF	Globe Valve Flanged	DN	15-200	Body:	ASTM	A352, A350
				Trim:	AISI 316, 316L	
				Trim:	AISI 410	

* MISCELLANEOUS

GKTI	Gasket, RF. C.A.F.	DN	15-400	C.A.F.		
ORFS	Orifice Flange Set	DN	50-600		ASTM	A350-LF2
STBT	Stud Bolt with Nuts		---	Studs:	ASTM	A320-L7
				Nuts:	ASTM	A194-4

Class No.: CN07	Page: 3	Content: Piping Components

ITEM DESCRIPTION		MESC	NOMINAL PIPE SIZE 15	20	25	40	50	80	100	150	200	250	300	350	400	450	500	600
* PIPE																		
Pipe		74.30.10														*	*	*
		74.14.23/31	*	*	*	*	*	*	*	*	*	*	*	*	*			
Pipe Nipple 50 mm		76.05.56	*	*	*	*												
* FLANGES																		
Blind Flange		76.62.12	*	*	*	*	*	*	*	*	*	*	*	*	*	*	*	*
Spectacle Blind Flange		76.88.06	*	*	*	*	*	*	*	*	*	*	*	*	*	*	*	*
Spacer Ring Type (ANS Flanges)		76.88.00	*	*	*	*	*	*	*	*	*	*	*	*	*	*	*	*
Welding Neck Flange		76.62.82	*	*	*	*	*	*	*	*	*	*	*	*	*	*	*	*
* FITTINGS																		
Cap	Butt-Weld. End	76.31.18	*	*	*	*	*	*	*	*	*	*	*	*	*	*	*	*
Elbow 45 Deg.	Butt-Weld. End	76.31.38	*	*	*	*	*	*	*	*	*	*	*	*	*	*	*	*
Elbow 90 Deg.	Butt-Weld. End	76.31.39	*	*	*	*	*	*	*	*	*	*	*	*	*	*	*	*
Equal Tee	Butt-Weld. End	76.31.84	*	*	*	*	*	*	*	*	*	*	*	*	*	*	*	*
Elbow 45 Deg.	Socket-Weld. End	76.35.38	*	*	*	*												
Elbow 90 Deg.	Socket-Weld. End	76.35.39	*	*	*	*												
Equal Tee	Socket-Weld. End	76.35.80	*	*	*	*												
Coupling	Socket-Weld. End	76.35.28		*	*	*	*											
Cap	Socket-Weld. End	76.34.18	*	*	*	*												
* VALVES																		
Ball Valve Red. Bore Flanged		75.72.11	*	*	*	*	*	*	*	*	*	*						
Check Valve Flanged		75.42.13	*	*	*	*	*	*	*	*	*	*	*	*	*	*	*	*
Gate Valve Flanged		75.42.32	*	*	*	*	*	*	*	*	*	*	*	*	*	*	*	*
Globe Valve Flanged		75.42.40	*	*	*	*	*	*	*	*	*							
* MISCELLANEOUS																		
Gasket, RF C.A.F.		85.31.15/17	*	*	*	*	*	*	*	*	*	*	*	*	*	*	*	*
Orifice Flange Set		60.88.00					*	*	*	*	*	*	*	*	*			

Class No.: CN07	Page: 4	Content: Reducing Piping Components

Run	Br.	BROB 76.80.04	RECB 76.31.72	REEB 76.31.73	TERB 76.31.85	TERS 76.00.85
20 ×	15		*	*	*	*
25 ×	15		*	*	*	*
25 ×	20		*	*	*	*
40 ×	15				*	*
40 ×	20		*	*	*	*
40 ×	25		*	*	*	*
50 ×	25		*	*		
50 ×	40		*	*		
80 ×	40		*	*		
80 ×	50	*	*	*	*	
100 ×	50	*	*	*	*	
100 ×	80	*	*	*	*	
150 ×	50	*				
150 ×	80	*	*	*	*	
150 ×	100	*	*	*	*	
200 ×	50	*				
200 ×	80	*				
200 ×	100	*	*	*	*	
200 ×	150	*	*	*	*	
250 ×	50	*				
250 ×	80	*				
250 ×	100	*			*	
250 ×	150	*	*	*	*	
250 ×	200	*	*	*	*	
300 ×	50	*				
300 ×	80	*				
300 ×	100	*				
300 ×	150	*	*	*	*	
300 ×	200	*	*	*	*	
300 ×	250	*	*	*		
350 ×	50	*				
350 ×	80	*				
350 ×	100	*				
350 ×	150	*	*	*	*	
350 ×	200	*	*	*	*	
350 ×	250	*	*	*	*	
350 ×	300	*	*	*	*	

Run	Br.	BROB 76.80.05	RECB 76.31.72	REEB 76.31.73	TERB 76.31.85
400 ×	50	*			
400 ×	80	*			
400 ×	100	*			
400 ×	150	*			*
400 ×	200	*	*	*	*
400 ×	250	*	*	*	*
400 ×	300	*	*	*	*
400 ×	350	*	*	*	*

COMP. NAME	DESCRIPTION
BROS	Branch Fitting Outlet Socket Wekd. End
BROB	Branch Outlet Red. Butt-Weld
RECB	Reducer Conc. Butt-Weld. End
REEB	Reducer Ecc. Butt-Weld. End
TERB	Tee Reducing Butt-Weld. End
TERS	Tee Reducing Socket-Weld. End

Br.	Run-Pipe	BROS 76.80.26
15	40-150	*
	200-600	*
20	50-80	*
	100-600	*
25	50	*
	80-100	*
	150-600	*
40	80-100	*
	150-300	*
	350-600	*

Class No.: CN07	Page: 5	Content: Bolting and Assemblies

BOLT SET FLANGED JOINTS

DN	No.	Inch		mm	81.38.63
15	4	1/2	×	70	*
20	4	5/8	×	75	*
25	4	5/8	×	80	*
40	4	3/4	×	90	*
50	8	5/8	×	90	*
80	8	3/4	×	110	*
100	8	3/4	×	115	*
150	12	3/4	×	125	*
200	12	7/8	×	140	*
250	16	1	×	160	*
300	16	1-1/8	×	170	*
350	20	1-1/8	×	180	*
400	20	1-1/4	×	190	*

BOLT SET SPECTACLE/SPACER

DN	No.	Inch		mm	81.38.63
15	4	1/2	×	75	*
20	4	5/8	×	85	*
25	4	5/8	×	90	*
40	4	3/4	×	100	*
50	8	5/8	×	100	*
80	8	3/4	×	120	*
100	8	3/4	×	130	*
150	12	3/4	×	145	*
200	12	7/8	×	170	*
250	16	1	×	190	*
300	16	1-1/8	×	205	*
350	20	1-1/8	×	215	*
400	20	1-1/4	×	235	*

BOLT SET ORIFICE FLANGES

DN	No.	Inch		mm	81.38.63
15	4	5/8	×	120	*
20	4	5/8	×	120	*
25	4	5/8	×	120	*
40	4	3/4	×	130	*
50	8	5/8	×	150	*
80	8	3/4	×	150	*
100	12	3/4	×	140	*
150	12	3/4	×	140	*
200	12	7/8	×	150	*
250	16	1	×	170	*
300	16	1-1/8	×	190	*
350	20	1-1/8	×	195	*
400	20	1-1/4	×	210	*
450	24	1-1/4	×	220	*
500	24	1-1/4	×	230	*
600	24	1-1/2	×	260	*

DRAIN POINT Fig. 2J

Run	DN 15-25	Br	DN 15	
Run	DN 40	Br	DN 20	NO.
Branch: Table Page 1				1
Ball Valve Red. Bore Flanged				1
Blind Flange				1
Gasket RF. C.A.F.				2
Pipe Nipple 50 mm				1
Stud Bolt with Nuts				8
Welding Neck Flange				1

* DRAIN POINT Fig. 2J

Run	DN 50-600	Br	DN 20	No.
Branch: Table Page 1				1
Ball Valve Red. Bore Flanged				1
Blind Flange				1
Gasket RF. C.A.F.				2
Stud Bolt with Nuts				8
Welding Neck Flange				1

* VENT POINT Fig. 1J

Run	DN 15-25	Br	DN 15	
Run	DN 40	Br	DN 20	No.
Branch: Table Page 1				1
Blind Flange				1
Gasket RF. C.A.F.				2
Globe Valve Flanged				1
Pipe Nipple 50 mm				1
Stud Bolt with Nuts				8
Welding Neck Flange				1

* VENT POINT Fig. 1J

Run	DN 50-600	Br	DN 20	No.
Branch: Table Page 1				1
Blind Flange				1
Gasket RF. C.A.F.				2
Globe Valve Flanged				1
Pipe Nipple 50 mm				1
Stud Bolt with Nuts				8
Welding Neck Flange				1

Class No.: CN10	Page: 1	Content: General

Base Material: Carbon Steel	First Issue:	Revision:	
Rating: PN 50 (Class 300)		Date:	
Corrosion Allowance: 1 mm		Sign:	

Temperature °C		0	50	100	150	200	250	300	350	400
urePress Barg.	DN 15-600	42.9	42.9	42.9	42.9	42.9	40.9	38.0	36.2	27.7

TABLE OF SCHEDULES

DN	Schedule
15	80
20	80
25	80
40	80
50	40
80	40
100	40
150	40
200	30
250	30
300	30
350	30
400	30
450	30
500	30
600	30

BRANCH CONNECTIONS 90 DEGREES

Run Size	BRANCH SIZE 15	20	25	40	50	80	100	150	200	250	300	350	400	450	500	600
600	C	C	C	C	E	E	E	E	E	E	E	E	E	E	E	A
500	C	C	C	C	E	E	E	E	E	E	E	E	E	E	A	
450	C	C	C	C	E	E	E	E	E	E	E	E	E	A		
400	C	C	C	C	E	E	E	E	E	E	E	E	A			
350	C	C	C	C	E	E	E	E	E	E	E	A				
300	C	C	C	C	E	E	E	E	E	E	A					
250	C	C	C	C	E	E	E	E	E	A						
200	C	C	C	C	E	E	E	E	A							
150	C	C	C	C	E	E	E	A								
100	C	C	C	C	D	D	A									
80	C	C	C	C	D	A										
50	C	C	C	B	A											
40	C	B	B	A												
25	B	B	A													
20	B	A														
15	A															

Notes:

-Design limits are acc. flange rating ANSI B16.5 Material Group 1.1 and to allowable internal prisor acc. ANSI BS 31.1.
- Max. allowable pressure for steam traps: 28 bar ga.
- Piston type check valves for horizontal mounting only

CODE	EXPLANATION OF CHARACTERS
A	Equal tee
B	Reducing tee
C	Branch fitting outlet socket weld
D	Pipe to pipe
E	Branch outlet reducing butt-weld

* PIPE						
PIPE	Pipe	API 5L-B	DN	15-400	API	5L-B (Seamless)
		API 5L-B	DN	450-600	API	5L-B (Welded)
	Pipe		DN	15-600	ASTM	A106-B
PNPP	Pipe Nipple 50 mm		DN	15-40	ASTM	A106-B
* FLANGES						
BLFL	Blind Flange		DN	15-600	ASTM	A105
SBFL	Spectacle Blind Flange		DN	15-400	ASTM	A516-60
SPRT	Spacer Ring Type (ANS Flanges)		DN	15-400	ASTM	A516-60
WNFL	Welding Neck Flange		DN	15-600	ASTM	A105
* FITTINGS						
CAPB	Cap	Butt-Weld. End	DN	15-600	ASTM	A234-WPB
E45B	Elbow 45 Deg.	Butt-Weld. End	DN	15-600	ASTM	A234-WPB
E90B	Elbow 90 Deg.	Butt-Weld. End	DN	15-600	ASTM	A234-WPB
TEEB	Equal Tee	Butt-Weld. End	DN	15-600	ASTM	A234-WPB
E45S	Elbow 45 Deg.	Socket-Weld. End	DN	15-40	ASTM	A105
E90S	Elbow 90 Deg.	Socket-Weld. End	DN	15-40	ASTM	A105
TEES	Equal Tee	Socket-Weld. End	DN	15-40	ASTM	A105
COUS	Coupling	Socket-Weld. End	DN	15-40	ASTM	A105
CAPS	Cap	Socket-Weld. End	DN	15-40	ASTM	A105
* REDUCING FITTINGS						
BROS	Branch Fitting Outlet Socket Weld. End		DN	15-40	ASTM	A105
BROB	Branch Outlet Red. Butt-Weld.		DN	50-600	ASTM	A105
RECB	Reducer Conc. Butt-Weld. End		DN	20-600	ASTM	A234-WPB
REEB	Reducer Ecc. Butt-Weld. End		DN	20-600	ASTM	A234-WPB
TERB	Tee Reducing Butt-Weld. End		DN	20-600	ASTM	A234-WPB
TERS	Tee Reducing Socket-Weld. End		DN	20-600	ASTM	A105

* VALVES					
CHVF	Check Valve Flanged	DN	15-600	Body:	ASTM A216-WCB/WCC, A105
				Trim:	Body Mat., AISI 316, 316L, AISI 410, + Stellite-6
CHVS	Check Valve Socket	DN	15-40	Body:	ASTM A216-WCB/WCC, A105
				Trim:	Body Mat., AISI 316, 316L, AISI 410, + Stellite-6
GAVB	Gate Valve Butt-Weld. End	DN	50-600	Body:	ASTM A216-WCB/WCC, A105
				Trim:	Body Mat., AISI 316, 316L, AISI 410, + Stellite-6
GAVF	Gate Valve Flanged	DN	---	Body:	ASTM A216-WCB/WCC, A105
				Trim:	Body Mat., AISI 316, 316L, AISI 410, + Stellite-6
GAVS	Gate Valve Sw	DN	15-40	Body:	ASTM A216-WCB/WCC, A105
				Trim:	Body Mat., AISI 316, 316L, AISI 410, + Stellite-6
GLVB	Globe Valve Butt-Weld. End	DN	50-200	Body:	ASTM A216-WCB/WCC, A105
				Trim:	Body Mat., AISI 316, 316L, AISI 410, + Stellite-6
GLVS	Globe Valve Socket	DN	15-40	Body:	ASTM A216-WCB/WCC, A105
				Trim:	Body Mat., AISI 316, 316L, AISI 410, + Stellite-6
* MISCELLANEOUS					
GKSW	Gasket, Spiral Wound	DN	15-600	AISI	316, 316L, Asbestos Filled CS Centring Ring.
ORFS	Orifice Flange Set	DN	50-600		ASTM A105
STBT	Stud Bolt with Nuts		----	Studs:	ASTM A193-B7
				Nuts:	ASTM A194-2H

Note:
- For full material description see relevant MESC buying description.
- Where both socket weld and butt weld fittings are specified, preference is subject to company approval.
- Where both API 5L and ASTM A 106 pipes are specified, preference is subject to company approval.

Class No.: CN10	Page: 3	Content: Piping Components

ITEM DESCRIPTION		MESC	NOMINAL PIPE SIZE 15	20	25	40	50	80	100	150	200	250	300	350	400	450	500	600
* PIPE																		
Pipe		74.13.23/31	*	*	*	*	*	*	*	*	*	*	*	*	*			
		74.13.23/24														*	*	*
		74.30.21/31	*	*	*	*	*	*	*	*	*	*	*	*	*	*	*	*
* FLANGES																		
Blind Flange		76.62.10	*	*	*	*	*	*	*	*	*	*	*	*	*	*	*	*
Spectacle Blind Flange		76.88.06	*	*	*	*	*	*	*	*	*	*	*	*	*	*	*	*
Spacer Ring Type (ANS Flanges)		76.88.10	*	*	*	*	*	*	*	*	*	*	*	*	*	*	*	*
Welding Neck Flange		76.62.78	*	*	*	*	*	*	*	*	*	*	*	*	*	*	*	*
* FITTINGS																		
Cap	Butt-Weld. End	76.30.18	*	*	*	*	*	*	*	*	*	*	*	*	*	*	*	*
Elbow 45 Deg.	Butt-Weld. End	76.30.38	*	*	*	*	*	*	*	*	*	*	*	*	*	*	*	*
Elbow 90 Deg.	Butt-Weld. End	76.30.40	*	*	*	*	*	*	*	*	*	*	*	*	*	*	*	*
Equal Tee	Butt-Weld. End	76.30.84	*	*	*	*	*	*	*	*	*	*	*	*	*	*	*	*
Elbow 45 Deg.	Socket-Weld. End	76.34.38	*	*	*	*												
Elbow 90 Deg.	Socket-Weld. End	76.34.39	*	*	*	*												
Equal Tee	Socket-Weld. End	76.34.80	*	*	*	*												
Coupling	Socket-Weld. End	76.34.28	*	*	*	*												
Cap	Socket-Weld. End	76.34.18	*	*	*	*												
* VALVES																		
Check Valve Flanged		75.37.13	*	*	*	*	*	*	*	*	*	*	*	*	*	*	*	*
Check Valve Socket		75.56.13	*	*	*	*												
Gate Valve Butt-Weld. End		75.56.33					*	*	*	*	*	*	*	*	*			
Gate Valve SW		75.56.35	*	*	*	*												
Globe Valve Butt-Weld. End		75.56.54					*	*	*	*	*							
Globe Valve Socket		75.56.45	*	*	*	*												
* MISCELLANEOUS																		
Gasket, Spiral Wound		85.41.35	*	*	*	*	*	*	*	*	*	*	*	*	*	*	*	*
Orifice Flange Set		60.88.52					*	*	*	*	*	*	*	*	*	*	*	*

Class No.: CN10	Page: 4	Content: Reducing Piping Components

Run	Br.	BROB 76.80.05	RECB 76.30.72	REEB 76.30.73	TERB 76.30.85	TERS 76.34.85
20 ×	15		*	*	*	*
25 ×	15		*	*	*	*
25 ×	20		*	*	*	*
40 ×	15				*	*
40 ×	20		*	*	*	*
40 ×	25		*	*	*	*
50 ×	25		*	*		
50 ×	40		*	*		
80 ×	40		*	*		
80 ×	50	*	*	*	*	
100 ×	50	*	*	*	*	
100 ×	80	*	*	*	*	
150 ×	50	*				
150 ×	80	*	*	*	*	
150 ×	100	*	*	*	*	
200 ×	50		*			
200 ×	80	*				
200 ×	100	*	*	*	*	
200 ×	150	*	*	*	*	
250 ×	50	*				
250 ×	80	*				
250 ×	100	*			*	
250 ×	150	*	*	*	*	
250 ×	200	*	*	*	*	
300 ×	50	*				
300 ×	80	*				
300 ×	100	*				
300 ×	150	*	*	*	*	
300 ×	200	*	*	*	*	
300 ×	250	*	*	*	*	
350 ×	50	*				
350 ×	80	*				
350 ×	100	*				
350 ×	150	*			*	
350 ×	200	*	*	*	*	
350 ×	250	*	*	*	*	
350 ×	300	*	*	*	*	

Run	Br.	BROB 76.80.05	RECB 76.30.72	REEB 76.30.73	TERB 76.30.85
400 ×	50	*			
400 ×	80	*			
400 ×	100	*			
400 ×	150	*			
400 ×	200	*	*	*	*
400 ×	250	*	*	*	*
400 ×	300	*	*	*	*
400 ×	350	*	*	*	*
450 ×	80	*			
450 ×	100	*			
450 ×	150	*			
450 ×	200	*	*	*	*
450 ×	250	*	*	*	*
450 ×	300	*	*	*	*
450 ×	350	*	*	*	*
450 ×	400	*	*	*	*
500 ×	50	*			
500 ×	80	*			
500 ×	100	*			
500 ×	150	*			
500 ×	200	*			
500 ×	250	*	*	*	*
500 ×	300	*	*	*	*
500 ×	350	*	*	*	*
500 ×	400	*	*	*	*
500 ×	450	*	*	*	*
600 ×	50	*			
600 ×	80	*			
600 ×	100	*			
600 ×	150	*			
600 ×	200	*			
600 ×	250	*	*	*	*
600 ×	300	*	*	*	*
600 ×	350	*	*	*	*
600 ×	400	*	*	*	*
600 ×	450	*	*	*	*
600 ×	500	*	*	*	*

COMP. NAME	DESCRIPTION
BROS	Branch Fitting Outlet Socket Weld
BROB	Branch Outlet Red. Butt-Weld
RECB	Reducer Conc. Butt-Weld. End
REEB	Reducer Ecc. Butt-Weld. End
TERB	Tee Reducing Butt-Weld. End
TERS	Tee Reducing Socket-Weld. End

BROS

Br.	Run-Pipe 76.80.26	
15	40-150	*
	200-600	*
20	50-80	*
	100-600	*
25	50	*
	80-100	*
	150-600	*
40	80-100	*
	150-300	*
	350-600	*

Class No.: CN10	Page: 5	Content: Bolting and Assemblies

BOLT SET FLANGED JOINTS

DN	No.	Inch		mm	81.38.61
15	4	1/2	×	70	*
20	4	5/8	×	75	*
25	4	5/8	×	80	*
40	4	3/4	×	90	*
50	8	5/8	×	90	*
80	8	3/4	×	110	*
100	8	3/4	×	115	*
150	12	3/4	×	125	*
200	12	7/8	×	140	*
250	16	1	×	160	*
300	16	1-1/8	×	170	*
350	20	1-1/8	×	180	*
400	20	1-1/4	×	190	*

BOLT SET SPECTACLE/SPACER

DN	No.	Inch		mm	81.38.61
15	4	1/2	×	75	*
20	4	5/8	×	85	*
25	4	5/8	×	90	*
40	4	3/4	×	100	*
50	8	5/8	×	100	*
80	8	3/4	×	120	*
100	8	3/4	×	130	*
150	12	3/4	×	145	*
200	12	7/8	×	170	*
250	16	1	×	190	*
300	16	1-1/8	×	205	*
350	20	1-1/8	×	215	*
400	20	1-1/4	×	235	*

BOLT SET ORIFICE FLANGES

DN	No.	Inch		mm	81.38.61
15	4	5/8	×	120	*
20	4	5/8	×	120	*
25	4	5/8	×	120	*
40	4	3/4	×	130	*
50	8	5/8	×	150	*
80	8	3/4	×	150	*
100	12	3/4	×	140	*
150	12	3/4	×	140	*
200	12	7/8	×	150	*
250	16	1	×	170	*
300	16	1-1/8	×	190	*
350	20	1-1/8	×	195	*
400	20	1-1/4	×	210	*
450	24	1-1/4	×	220	*
500	24	1-1/4	×	230	*
600	24	1-1/2	×	260	*

DRAIN POINT Fig. 0E

Run	DN 15-25	Br	DN 15	
Run	DN 40	Br	DN 20	NO.
Branch: Table Page 1				1
Blind Flange				1
Gasket Spiral Wound				1
Gate Valve SW				1
Pipe Nipple 50 mm				2
Stud Bolt with Nuts				4
Welding Neck Flange				1

* DRAIN POINT Fig. 0E

Run	DN 50-600	Br	DN 20	NO.
Branch: Table Page 1				1
Blind Flange				1
Gasket Spiral Wound				1
Gate Valve SW				1
Pipe Nipple 50 mm				2
Stud Bolt with Nuts				4
Welding Neck Flange				1

* VENT POINT Fig. 1E

Run	DN 15-25	Br	DN 15	
Run	DN 40	Br	DN 20	NO.
Branch: Table Page 1				1
Blind Flange				1
Gasket Spiral Wound				1
Globe Valve Socket				1
Pipe Nipple 50 mm				2
Stud Bolt with Nuts				4
Welding Neck Flange				1

* VENT POINT Fig. 1E

Run	DN 50-600	Br	DN 20	NO.
Branch: Table Page 1				1
Blind Flange				1
Gasket Spiral Wound				1
Globe Valve Socket				1
Pipe Nipple 50 mm				2
Stud Bolt with Nuts				4
Welding Neck Flange				1

Class No.: CN06	Page: 1	Content: General
Base Material: Killed Carbon Steel	First Issue: Revision:	
Rating: PN 50 (Class 300)	Date:	
Corrosion Allowance: 3 mm	Sign:	

Temperature °C		0-200
urePress Barg.	DN 15-400	20

TABLE OF SCHEDULES

DN	Schedule
15	160
20	160
25	160
40	160
50	80
80	80
100	80
150	80
200	40
250	40
300	40
350	40
400	40

BRANCH CONNECTIONS 90 DEGREES

Run Size	BRANCH SIZE 15	20	25	40	50	80	100	150	200	250	300	350	400
400	C	C	C	C	D	D	D	D	D	D	D	D	D
350	C	C	C	C	D	D	D	D	D	D	D	D	
300	C	C	C	C	D	D	D	D	D	D	D		
250	C	C	C	C	D	D	D	D	D	D			
200	C	C	C	C	D	D	D	D	D				
150	C	C	C	C	D	D	D	D					
100	C	C	C	C	D	D	D						
80	C	C	C	C	D	D							
50	C	C	C	C	D								
40	C	C	C	A									
25	B	B	A										
20	B	A											
15	A												

Note:

- Pipe DN 40 and smaller to be bent, radius R-4D min., wherever possible
- DN 15 and DN 20 piping components only to be used for short branches e.g. pressure points
- Open vents and drains are not allowed in HF service.
- Standard tees to be applied if more economical or preferred for practical reasons, instead of equal size pipe-to-pipe connection.

CODE CHARACTERS	EXPLANATION OF
A	Equal tee
B	Reducing tee
C	Branch fitting outlet socket weld
D	Pipe to pipe

Class No.: CN12	Page: 2	Content: Material Descriptions

* PIPE

PIPE	Pipe	DN	15-400	ASTM	A333-6 (Seamless)

* FLANGES

BLFL	Blind Flange	DN	15-400	ASTM	A350-LF2
SBFL	Spectacle Blind Flange	DN	15-400	ASTM	A516-60
SPRT	Spacer Ring Type (ANS Flanges)	DN	15-400	ASTM	A516-60
WNFL	Welding Neck Flange	DN	15-400	ASTM	A350-LF2

* FITTINGS

CAPB	Cap	Butt-Weld. End	DN	15-400	ASTM	A420-WPL6
E45B	Elbow 45 Deg.	Butt-Weld. End	DN	50-400	ASTM	A420-WPL6
E90B	Elbow 90 Deg.	Butt-Weld. End	DN	50-400	ASTM	A420-WPL6
TEEB	Equal Tee	Butt-Weld. End	DN	15-40	ASTM	A420-WPL6
E45S	Elbow 45 Deg.	Socket-Weld. End	DN	15-40	ASTM	A350-LF2
E90S	Elbow 90 Deg.	Socket-Weld. End	DN	15-40	ASTM	A350-LF2
TEES	Equal Tee	Socket-Weld. End	DN	15-40	ASTM	A350-LF2
COUS	Coupling	Socket-Weld. End	DN	15-40	ASTM	A350-LF2
CAPS	Cap	Socket-Weld. End	DN	15-40	ASTM	A350-LF2

* REDUCING FITTINGS

BROS	Branch Fitting Outlet Socket Weld. End	DN	15-40	ASTM	A350-LF2
BROB	Branch Outlet Red. Butt-Weld.	DN	15-400	ASTM	A350-LF2
RECB	Reducer Conc. Butt-Weld. End	DN	15-400	ASTM	A420-WPL6
REEB	Reducer Ecc. Butt-Weld. End	DN	15-400	ASTM	A420-WPL6
TERB	Tee Reducing Butt-Weld. End	DN	15-25	ASTM	A420-WPL6
TERS	Tee Reducing Socket-Weld. End	DN	20-40	ASTM	A350-LF2

Note:
- For full material description see relevant MESC buying description.
- Where both socket weld and butt weld fittings are specified, preference is subject to company approval.

* VALVES

CHVF	Check Valve Swing Flanged	DN	15-400	Body:	ASTM	A352-LCC
				Trim:	ASTM	B564A
GLVF	Globe Valve Flanged	DN	15-250	Body:	ASTM	A352-LCC
				Trim:	ASTM	B564A
BARF	Ball Valve Red. Bore Flanged	DN	15-400	Body:	ASTM	A352-LCC
				Ball/Stem:	ASTM	B564A
				Seat:	PIFE	

* MISCELLANEOUS

GKTI	Gasket, Spiral Wound	DN	15-250	Monel, PTFE Filled, 4.5 mm CS Centering Ring, Monnel Inner Ring		
ORFS	Orifice Flange Set	DN	50-600		ASTM	A350-LF2
STBT	Stud Bolt with Nuts		---	Studs:	ASTM	A320-L7
				Nuts:	ASTM	A194-4

Class No.: CN12	Page: 3	Content: Piping Components

ITEM DESCRIPTION			MESC	NOMINAL PIPE SIZE 15	20	25	40	50	80	100	150	200	250	300	350	400
* PIPE																
Pipe		74.14.21/31	*	*	*	*	*	*	*	*	*	*	*	*	*	
* FLANGES																
Blind Flange		76.62.12	*	*	*	*	*	*	*	*	*	*	*	*	*	
Spectacle Blind Flange		76.88.06	*	*	*	*	*	*	*	*	*	*	*	*	*	
Spacer Ring Type (ANS Flanges)		76.88.00	*	*	*	*	*	*	*	*	*	*	*	*	*	
Welding Neck Flange		76.62.82	*	*	*	*	*	*	*	*	*	*	*	*	*	
* FITTINGS																
Cap	Butt-Weld. End	76.31.18	*	*	*	*	*	*	*	*	*	*	*	*	*	
Elbow 45 Deg.	Butt-Weld. End	76.31.38					*	*	*	*	*	*	*	*	*	
Elbow 90 Deg.	Butt-Weld. End	76.31.39					*	*	*	*	*	*	*	*	*	
Equal Tee	Butt-Weld. End	76.31.84	*	*	*	*	*	*	*	*	*	*	*	*	*	
Elbow 45 Deg.	Socket-Weld. End	76.35.38	*	*	*	*										
Elbow 90 Deg.	Socket-Weld. End	76.35.39	*	*	*	*										
Equal Tee	Socket-Weld. End	76.35.84	*	*	*	*										
Coupling	Socket-Weld. End	76.35.28	*	*	*	*										
Cap	Socket-Weld. End	76.35.18	*	*	*	*										
* VALVES																
Ball Valve Red. Bore Flanged		75.42.00	*	*	*	*	*	*	*	*	*	*	*	*	*	
Check Valve Flanged		75.42.13	*	*	*	*	*	*	*	*	*	*	*	*	*	
Globe Valve Flanged		75.42.40	*	*	*	*	*	*	*	*	*	*				
* MISCELLANEOUS																
Gasket, Spiral Wound		85.41.00	*	*	*	*	*	*	*	*	*	*	*	*	*	
Orifice Flange Set		60.88.00					*	*	*	*	*	*	*	*	*	

Class No.: CN12	Page: 4	Content: Reducing Piping Components

Run		Br.	BROB 76.80.04	RECB 76.31.72	REEB 76.31.72	TERB 76.31.85	TERS 76.00.85
20	×	15		*	*	*	*
25	×	15		*	*	*	*
25	×	20		*	*	*	*
40	×	15		*	*		*
40	×	20		*	*		*
40	×	25		*	*		*
50	×	25		*	*		
50	×	40		*	*		
80	×	40		*	*		
80	×	50		*	*		
100	×	50		*	*		
100	×	80		*	*		
150	×	80		*	*		
150	×	100		*	*		
200	×	100		*	*		
200	×	150		*	*		
250	×	150		*	*		
250	×	200		*	*		
300	×	200		*	*		
300	×	250		*	*		
350	×	250		*	*		
350	×	300		*	*		
400	×	300		*	*		
400	×	350		*	*		

COMP. NAME	DESCRIPTION
BROS	Branch Fitting Outlet Socket Wekd. End
BROB	Branch Outlet Red. Butt-Weld
RECB	Reducer Conc. Butt-Weld. End
REEB	Reducer Ecc. Butt-Weld. End
TERB	Tee Reducing Butt-Weld. End
TERS	Tee Reducing Socket-Weld. End

Br.	Run-Pipe	BROS 76.80.26
15	40-150	*
	200-400	*
20	50-80	*
	100-400	*
25	50	*
	80-100	*
	150-400	*
40	80-100	*
	150-300	*
	350-400	*

Class No.: CN12	Page: 5	Content: Bolting and Assemblies

BOLT SET FLANGED JOINTS

DN	No.	Inch		mm	81.38.63
15	4	1/2	×	70	*
20	4	5/8	×	75	*
25	4	5/8	×	80	*
40	4	3/4	×	90	*
50	8	5/8	×	90	*
80	8	3/4	×	110	*
100	8	3/4	×	115	*
150	12	3/4	×	125	*
200	12	7/8	×	140	*
250	16	1	×	160	*
300	16	11/8	×	170	*
350	20	11/8	×	180	*
400	20	11/4	×	190	*

BOLT SET ORIFICE FLANGES

DN	No.	Inch		mm	81.38.63
15	4	5/8	×	120	*
20	4	5/8	×	120	*
25	4	5/8	×	120	*
40	4	3/4	×	130	*
50	8	5/8	×	150	*
80	8	3/4	×	150	*
100	12	3/4	×	140	*
150	12	3/4	×	140	*
200	12	7/8	×	150	*
250	16	1	×	170	*
300	16	1-1/8	×	190	*
350	20	1-1/8	×	195	*
400	20	1-1/4	×	210	*

BOLT SET SPECTACLE/SPACER

DN	No.	Inch		mm	81.38.63
15	4	1/2	×	75	*
20	4	5/8	×	85	*
25	4	5/8	×	90	*
40	4	3/4	×	100	*
50	8	5/8	×	100	*
80	8	3/4	×	120	*
100	8	3/4	×	130	*
150	12	3/4	×	145	*
200	12	7/8	×	180	*
250	16	1	×	205	*
300	16	11/8	×	215	*
350	20	11/8	×	230	*
400	20	11/4	×	240	*

Class No.: CN14	Page: 1	Content: General
Base Material: Carbon Steel	First Issue: Revision:	
Rating: PN 50 (Class 300)	Date:	
Corrosion Allowance: 1 mm	Sign:	

Temperature °C		0	50	100	150	200	250	300	350	400
urePress Barg.	DN 15-600	50.5	50.0	46.3	45.1	43.8	41.8	38.9	36.8	32.6

TABLE OF SCHEDULES

DN	Schedule
15	80
20	80
25	80
40	80
50	40
80	40
100	40
150	40
200	30
250	30
300	30
350	30
400	30
450	30
500	30
600	30

BRANCH CONNECTIONS 90 DEGREES

Run Size	BRANCH SIZE 15	20	25	40	50	80	100	150	200	250	300	350	400	450	500	600
600	C	C	C	C	E	E	E	E	E	E	E	E	E	E	E	A
500	C	C	C	C	E	E	E	E	E	E	E	E	E	E	A	
450	C	C	C	C	E	E	E	E	E	E	E	E	E	A		
400	C	C	C	C	E	E	E	E	E	E	E	E	A			
350	C	C	C	C	E	E	E	E	E	E	E	A				
300	C	C	C	C	E	E	E	E	E	E	A					
250	C	C	C	C	E	E	E	E	E	A						
200	C	C	C	C	E	E	E	E	A							
150	C	C	C	C	E	E	E	A								
100	C	C	C	C	D	D	A									
80	C	C	C	C	D	A										
50	C	C	C	B	A											
40	C	B	B	A												
25	B	B	A													
20	B	A														
15	A															

Note:

-Design limits are acc. flange rating ANSI B16.5 Material Group 1.1 and ball valve ratings acc. B 31.3.

- Piston type check valves for horizontal mounting only.

CODE	EXPLANATION OF CHARACTERS
A	Equal tee
B	Reducing tee
C	Branch fitting outlet socket weld
D	Pipe to pipe
E	Branch outlet reducing butt-weld

Class No.: CN14	Page: 2	Content: Material Descriptions

* PIPE

PIPE	Pipe	DN	15-600	ASTM	A106-B
PNPP	Pipe Nipple 50 mm	DN	15-40	ASTM	A106-B

* FLANGES

BLFL	Blind Flange	DN	15-600	ASTM	A105
SBFL	Spectacle Blind Flange	DN	15-600	ASTM	A516-60
SPRT	Spacer Ring Type (ANS Flanges)	DN	15-600	ASTM	A516-60
WNFL	Welding Neck Flange	DN	15-600	ASTM	A105

* FITTINGS

CAPB	Cap	Butt-Weld. End	DN	15-600	ASTM	A234-WPB
E45B	Elbow 45 Deg.	Butt-Weld. End	DN	15-600	ASTM	A234-WPB
E90B	Elbow 90 Deg.	Butt-Weld. End	DN	15-600	ASTM	A234-WPB
TEEB	Equal Tee	Butt-Weld. End	DN	15-600	ASTM	A234-WPB
E45S	Elbow 45 Deg.	Socket-Weld. End	DN	15-40	ASTM	A105
E90S	Elbow 90 Deg.	Socket-Weld. End	DN	15-40	ASTM	A105
TEES	Equal Tee	Socket-Weld. End	DN	15-40	ASTM	A105
COUS	Coupling	Socket-Weld. End	DN	15-40	ASTM	A105
CAPS	Cap	Socket-Weld. End	DN	15-40	ASTM	A105

* REDUCING FITTINGS

BROS	Branch Fitting Outlet Socket Weld. End	DN	15-40	ASTM	A105
BROB	Branch Outlet Red. Butt-Weld .	DN	50-600	ASTM	A105
RECB	Reducer Conc. Butt-Weld. End	DN	20-600	ASTM	A234-WPB
REEB	Reducer Ecc. Butt-Weld. End	DN	20-600	ASTM	A234-WPB
TERB	Tee Reducing Butt-Weld. End	DN	20-600	ASTM	A234-WPB
TERS	Tee Reducing Socket-Weld. End	DN	20-40	ASTM	A105

Note:
- For full material description see relevant MESC buying description.
- Where both socket weld and butt weld fittings are specified, preference is subject to company approval.

* VALVES

CHVF	Check Valve Flanged	DN	15-600	Body:	ASTM	A216-WCB/WCC, A105
				Trim:	AISI	410
GAVF	Gate Valve Flanged	DN	15-600	Body:	ASTM	A216-WCB/WCC, A105
				Trim:	AISI	410
GLVF	Globe Valve Flanged	DN	15-200	Body:	ASTM	A216-WCB/WCC, A105
				Trim:	AISI	410

* MISCELLANEOUS

GKSW	Gasket, Spiral Wound	DN	15-600	AISI	316, Graphite Filled, CS Centring-, SS Inner Ring	
ORFS	Orifice Flange Set	DN	50-600		ASTM	A105
STBT	Stud Bolt with Nuts		---	Studs:	ASTM	A193-B7
				Nuts:	ASTM	A194-2H

Class No.: CN14	Page: 3	Content: Piping Components

ITEM DESCRIPTION		MESC	NOMINAL PIPE SIZE 15	20	25	40	50	80	100	150	200	250	300	350	400	450	500	600
* PIPE																		
Pipe		74.30.05	*	*	*	*	*	*	*	*	*	*	*	*	*	*	*	*
Pipe Nipple 50 mm		76.05.56	*	*	*	*												
* FLANGES																		
Blind Flange		76.62.10	*	*	*	*	*	*	*	*	*	*	*	*	*	*	*	*
Spectacle Blind Flange		76.88.06	*	*	*	*	*	*	*	*	*	*	*	*	*	*	*	*
Spacer Ring Type (ANS Flanges)		76.88.16	*	*	*	*	*	*	*	*	*	*	*	*	*	*	*	*
Welding Neck Flange		76.62.79	*	*	*	*	*	*	*	*	*	*	*	*	*	*	*	*
* FITTINGS																		
Cap	Butt-Weld. End	76.30.18	*	*	*	*	*	*	*	*	*	*	*	*	*	*	*	*
Elbow 45 Deg.	Butt-Weld. End	76.30.38	*	*	*	*	*	*	*	*	*	*	*	*	*	*	*	*
Elbow 90 Deg.	Butt-Weld. End	76.30.39/40	*	*	*	*	*	*	*	*	*	*	*	*	*	*	*	*
Equal Tee	Butt-Weld. End	76.30.84	*	*	*	*	*	*	*	*	*	*	*	*	*	*	*	*
Elbow 45 Deg.	Socket-Weld. End	76.34.38	*	*	*	*												
Elbow 90 Deg.	Socket-Weld. End	76.34.39	*	*	*	*												
Equal Tee	Socket-Weld. End	76.34.84	*	*	*	*												
Coupling	Socket-Weld. End	76.34.28	*	*	*	*												
Cap	Socket-Weld. End	76.34.18	*	*	*	*												
* VALVES																		
Check Valve Flanged		75.37.12	*	*	*	*	*	*	*	*	*	*	*	*	*	*	*	*
Gate Valve Flanged		75.37.32					*	*	*	*	*	*	*	*	*	*	*	*
Globe Valve Flanged		75.37.42	*	*	*	*	*	*	*	*	*							
* MISCELLANEOUS																		
Gasket, Spiral Wound		85.41.35	*	*	*	*	*	*	*	*	*	*	*	*	*	*	*	*
Orifice Flange Set		60.88.52						*	*	*	*	*	*	*	*	*	*	*

Run	Br.	BROB 76.80.05	RECB 76.30.72	REEB 76.30.73	TERB 76.30.85	TERS 76.34.85
20 ×	15		*	*	*	*
25 ×	15		*	*	*	*
25 ×	20		*	*	*	*
40 ×	15				*	*
40 ×	20		*	*	*	*
40 ×	25		*	*	*	*
50 ×	25		*	*		
50 ×	40		*	*		
80 ×	40		*	*		
80 ×	50	*	*	*	*	
100 ×	50	*	*	*	*	
100 ×	80	*	*	*	*	
150 ×	50					
150 ×	80	*	*	*	*	
150 ×	100	*	*	*	*	
200 ×	50	*				
200 ×	80	*				
200 ×	100	*	*	*	*	
200 ×	150	*	*	*	*	
250 ×	50	*				
250 ×	80	*				
250 ×	100	*				
250 ×	150	*	*	*	*	
250 ×	200	*	*	*	*	
300 ×	50	*				
300 ×	80	*				
300 ×	100	*				
300 ×	150	*	*	*	*	
300 ×	200	*	*	*	*	
300 ×	250	*	*	*	*	
350 ×	50	*				
350 ×	80	*				
350 ×	100	*				
350 ×	150	*			*	
350 ×	200	*	*	*	*	
350 ×	250	*	*	*	*	
350 ×	300	*	*	*	*	

Run	Br.	BROB 76.80.05	RECB 76.30.72	REEB 76.30.73	TERB 76.30.85
400 ×	50	*			
400 ×	80	*			
400 ×	100	*			
400 ×	150	*			
400 ×	200	*	*	*	*
400 ×	250	*	*	*	*
400 ×	300	*	*	*	*
400 ×	350	*	*	*	*
450 ×	50	*			
450 ×	80	*			
450 ×	100	*			
450 ×	150	*			
450 ×	200	*			*
450 ×	250	*	*	*	*
450 ×	300	*	*	*	*
450 ×	350	*	*	*	*
450 ×	400	*	*	*	*
500 ×	50	*			
500 ×	80	*			
500 ×	100	*			
500 ×	150	*			
500 ×	200	*			*
500 ×	250	*			*
500 ×	300	*	*	*	*
500 ×	350	*	*	*	*
500 ×	400	*	*	*	*
500 ×	450	*	*	*	*
600 ×	50	*			
600 ×	80	*			
600 ×	100	*			
600 ×	150	*			
600 ×	200	*			
600 ×	250	*			*
600 ×	300	*			*
600 ×	350	*			*
600 ×	400	*	*	*	*
600 ×	450	*	*	*	*
600 ×	500	*	*	*	*

COMP. NAME	DESCRIPTION
BROS	Branch Fitting Outlet Socket Wekd. End
BROB	Branch Outlet Red. Butt-Weld
RECB	Reducer Conc. Butt-Weld. End
REEB	Reducer Ecc. Butt-Weld. End
TERB	Tee Reducing Butt-Weld. End
TERS	Tee Reducing Socket-Weld. End

BROS

Br.	Run-Pipe	76.80.26
15	40-150	*
	200-600	*
20	50-80	*
	100-600	*
25	50	*
	80-100	*
	150-600	*
40	80-100	*
	150-300	*
	350-600	*

BOLTSET FLANGED JOINTS

DN	No.	Inch		mm	81.38.61
15	4	1/2	×	70	*
20	4	5/8	×	75	*
25	4	5/8	×	80	*
40	4	3/4	×	90	*
50	8	5/8	×	90	*
80	8	3/4	×	110	*
100	8	3/4	×	115	*
150	12	3/4	×	125	*
200	12	7/8	×	140	*
250	16	1	×	160	*
300	16	1-1/8	×	170	*
350	20	1-1/8	×	180	*
400	20	1-1/4	×	190	*
450	24	1-1/4	×	195	*
500	24	1-1/4	×	210	*
600	24	1-1/2	×	235	*

BOLTSET SPECTACLE/SPACER

DN	No.	Inch		mm	81.38.61
15	4	1/2	×	75	*
20	4	5/8	×	85	*
25	4	5/8	×	90	*
40	4	3/4	×	100	*
50	8	5/8	×	100	*
80	8	3/4	×	120	*
100	8	3/4	×	130	*
150	12	3/4	×	145	*
200	12	7/8	×	170	*
250	16	1	×	190	*
300	16	1-1/8	×	205	*
350	20	1-1/8	×	215	*
400	20	1-1/4	×	235	*
450	24	1-1/4	×	245	*
500	24	1-1/4	×	260	*
600	24	1-1/2	×	295	*

BOLT SET ORIFICE FLANGES

DN	No.	Inch		mm	81.38.61
15	4	5/8	×	120	*
20	4	5/8	×	120	*
25	4	5/8	×	120	*
40	4	3/4	×	130	*
50	8	5/8	×	150	*
80	8	3/4	×	150	*
100	12	3/4	×	140	*
150	12	3/4	×	140	*
200	12	7/8	×	150	*
250	16	1	×	170	*
300	16	1-1/8	×	190	*
350	20	1-1/8	×	195	*
400	20	1-1/4	×	210	*
450	24	1-1/4	×	220	*
500	24	1-1/4	×	230	*
600	24	1-1/2	×	260	*

* DRAIN POINT Fig. 0I

Run DN 15-25	Br DN 15
	No.
Branch: Table Page 1	1
Blind Flange	1
Gasket RF. C.A.F.	2
Gate Valve Flanged	1
Stud Bolt with Nuts	8
Welding Neck Flange	1

* DRAIN POINT Fig. 0I

Run DN 40-40	Br DN 20
	No.
Branch: Table Page 1	1
Blind Flange	1
Gasket RF. C.A.F.	2
Gate Valve Flanged	1
Stud Bolt with Nuts	8
Welding Neck Flange	1

DRAIN POINT Fig. 0J

Run DN 50-600	Br DN 20
	No.
Branch: Table Page 1	1
Blind Flange	1
Gasket RF. C.A.F.	2
Gate Valve Flanged	1
Pipe Nipple 50 mm	1
Stud Bolt with Nuts	8
Welding Neck Flange	1

* VENT POINT Fig. 1I

Run DN 15-25	Br DN 15
	No.
Branch: Table Page 1	1
Blind Flange	1
Gasket RF. C.A.F.	2
Globe Valve Flanged	1
Stud Bolt with Nuts	8
Welding Neck Flange	1

* VENT POINT Fig. 1I

Run DN 40-40	Br DN 20
	No.
Branch: Table Page 1	1
Blind Flange	1
Gasket RF. C.A.F.	2
Globe Valve Flanged	1
Stud Bolt with Nuts	8
Welding Neck Flange	1

* VENT POINT Fig. 1J

Run DN 50-600	Br DN 20
	No.
Branch: Table Page 1	1
Blind Flange	1
Gasket RF. C.A.F.	2
Globe Valve Flanged	1
Pipe Nipple 50 mm	1
Stud Bolt with Nuts	8
Welding Neck Flange	1

Base Material: Carbon Steel, Fine Grained, LT	First Issue: Revision:	
Rating: PN 50 (Class 300)	Date:	
Corrosion Allowance: 1 mm	Sign:	

Temperature °C		-35	0	70
urePress Barg.	DN 20-150	30.0	30.0	30.0

TABLE OF SCHEDULES

DN	Schedule
15	80
20	80
25	80
40	80
50	80
80	80
100	80
150	80

BRANCH CONNECTIONS 90 DEGREES

Run Size	BRANCH SIZE 20	25	40	50	80	100	150
150	C	C	C	E	B	B	A
100	C	C	B	B	B	A	
80	C	C	B	B	A		
50	B	B	B	A			
40	B	B	A				
25	B	A					
20	A						

NOTES:

- Design limits are based on service conditions.
- All welds to be 100% radiographed.
- No angled welds permitted.
- This piping class is originally designed for liquid and vapour chlorinc service.
- Application of other types of branch connections is subject to company approval.

CODE	EXPLANATION OF CHARACTERS
A	Equal tee
B	Reducing tee
C	Branch fitting outlet socket weld
E	Branch outlet reducing butt-weld

* PIPE

PIPE	Pipe	DN	15-150	ASTM	A333-6 (Seamless)
PNPP	Pipe Nipple 50 mm	DN	15-40	ASTM	A333-6 (Seamless)

* FLANGES

BLFL	Blind Flange	DN	15-150	ASTM	A350-LF2
SBFL	Spectacle Blind Flange	DN	15-150	ASTM	A516-60
SPRT	Spacer Ring Type (ANS Flanges)	DN	15-150	ASTM	A516-60
WNFL	Welding Neck Flange	DN	15-150	ASTM	A350-LF2

* FITTINGS

CAPB	Cap	Butt-Weld. End	DN	15-150	ASTM	A420-WPL6
E45B	Elbow 45 Deg.	Butt-Weld. End	DN	15-150	ASTM	A420-WPL6
E90B	Elbow 90 Deg.	Butt-Weld. End	DN	15-150	ASTM	A420-WPL6
TEEB	Equal Tee	Butt-Weld. End	DN	15-150	ASTM	A420-WPL6
E45S	Elbow 45 Deg.	Socket-Weld. End	DN	15-40	ASTM	A350-LF2
E90S	Elbow 90 Deg.	Socket-Weld. End	DN	15-40	ASTM	A350-LF2
TEES	Equal Tee	Socket-Weld. End	DN	15-40	ASTM	A350-LF2
COUS	Coupling	Socket-Weld. End	DN	15-40	ASTM	A1350-LF2
CAPS	Cap	Socket-Weld. End	DN	15-40	ASTM	A350-LF2

* REDUCING FITTINGS

BROS	Branch Fitting Outlet Socket Weld. End	DN	15-40	ASTM	A350-LF2
BROB	Branch Outlet Red. Butt-Weld.	DN	50-150	ASTM	A350-LF2
RECB	Reducer Conc. Butt-Weld. End	DN	20-150	ASTM	A420-WPL6
REEB	Reducer Ecc. Butt-Weld. End	DN	20-150	ASTM	A420-WPL6
TERB	Tee Reducing Butt-Weld. End	DN	20-150	ASTM	A420-WPL6
TERS	Tee Reducing Socket-Weld. End	DN	20-40	ASTM	A350-LF2

Note:
- For full material description see relevant MESC buying description.
- Where both socket weld and butt weld fittings are specified, preference is subject to company approval.

* VALVES

BARF	Ball Valve Red. Bore Flanged	DN	15-150	Body:	ASTM	A352, A350
				Ball/Stem:	Monel	
				Seats:	PTFE (-50, Dry chlorine)	

* MISCELLANEOUS

GKTI	Gasket, RF. C.A.F.	DN	15-150	C.A.F.		
ORFS	Orifice Flange Set	DN	50-150		ASTM	A350-LF2
STBT	Stud Bolt with Nuts		---	Studs:	ASTM	A320-L7
				Nuts:	ASTM	A194-4

ITEM DESCRIPTION		MESC	NOMINAL PIPE SIZE 15	20	25	40	50	80	100	150
* PIPE										
Pipe		74.14.21	*	*	*	*	*	*	*	*
* FLANGES										
Blind Flange		76.62.12	*	*	*	*	*	*	*	*
Spectacle Blind Flange		76.88.00	*	*	*	*	*	*	*	*
Spacer Ring Type (ANS Flanges)		76.88.00	*	*	*	*	*	*	*	*
Welding Neck Flange		76.62.82	*	*	*	*	*	*	*	*
* FITTINGS										
Cap	Butt-Weld. End	76.31.18	*	*	*	*	*	*	*	*
Elbow 45 Deg.	Butt-Weld. End	76.31.38	*	*	*	*	*	*	*	*
Elbow 90 Deg.	Butt-Weld. End	76.31.39/40	*	*	*	*	*	*	*	*
Equal Tee	Butt-Weld. End	76.31.84	*	*	*	*	*	*	*	*
Elbow 45 Deg.	Socket-Weld. End	76.35.38	*	*	*	*				
Elbow 90 Deg.	Socket-Weld. End	76.35.39	*	*	*	*				
Equal Tee	Socket-Weld. End	76.35.84	*	*	*	*				
Coupling	Socket-Weld. End	76.35.28	*	*	*	*				
Cap	Socket-Weld. End	76.35.18	*	*	*	*				
* VALVES										
Ball Valve Red. Bore Flanged		75.72.11	*	*	*	*	*	*	*	
* MISCELLANEOUS										
Gasket, RF. C.A.F.		85.31.15/17	*	*	*	*	*	*	*	*
Orifice Flange Set		60.88.00					*	*	*	*

Class No.:	CN16	Page:	4	Content:	Reducing Piping Components

Run		Br.	BROB 76.80.00	RECB 76.31.72	REEB 76.31.73	TERB 76.31.85	TERS 76.35.85
20	×	15		*	*	*	*
25	×	15		*	*	*	*
25	×	20		*	*	*	*
40	×	15				*	*
40	×	20		*	*	*	*
40	×	25		*	*	*	*
50	×	20			*	*	
50	×	25		*	*	*	
50	×	40		*	*	*	
80	×	40		*	*	*	
80	×	50		*	*	*	
100	×	40				*	
100	×	50	*	*	*	*	
100	×	80	*	*	*	*	
150	×	50	*			*	
150	×	80	*	*	*	*	
150	×	100	*	*	*	*	

COMP. NAME	DESCRIPTION
BROS	Branch Fitting Outlet Socket Wekd. End
BROB	Branch Outlet Red. Butt-Weld
RECB	Reducer Conc. Butt-Weld. End
REEB	Reducer Ecc. Butt-Weld. End
TERB	Tee Reducing Butt-Weld. End
TERS	Tee Reducing Socket-Weld. End

Br.	Run-Pipe	BROS 76.80.26
20	80	*
	100-150	*
25	80	*
	100-150	*
40	150	*

Class No.: CN16	Page: 5	Content: Bolting and Assemblies

BOLT SET FLANGED JOINTS

DN	No.	Inch		mm	81.38.63
15	4	1/2	×	70	*
20	4	5/8	×	75	*
25	4	5/8	×	80	*
40	4	3/4	×	90	*
50	8	5/8	×	90	*
80	8	3/4	×	110	*
100	8	3/4	×	115	*
150	12	3/4	×	125	*

BOLT SET SPECTACLE/SPACER

DN	No.	Inch		mm	81.38.63
15	4	1/2	×	75	*
20	4	5/8	×	85	*
25	4	5/8	×	90	*
40	4	3/4	×	100	*
50	8	5/8	×	100	*
80	8	3/4	×	120	*
100	8	3/4	×	130	*
150	12	3/4	×	145	*

BOLT SET ORIFICE FLANGES

DN	No.	Inch		mm	81.38.63
15	4	5/8	×	120	*
20	4	5/8	×	120	*
25	4	5/8	×	120	*
40	4	3/4	×	130	*
50	8	5/8	×	150	*
80	8	3/4	×	150	*
100	12	3/4	×	140	*
150	12	3/4	×	140	*

* DRAIN POINT Fig. 2J

Run DN 20-50 Br DN 20

	No.
Branch: Table Page 1	1
Ball Valve Red. Bore Flanged	1
Blind Flange	1
Gasket RF. C.A.F.	2
Pipe Nipple 50 mm	1
Stud Bolt with Nuts	8
Welding Neck Flange	1

* DRAIN POINT Fig. 2J

Run DN 80-150 Br DN 20

	No.
Branch: Table Page 1	1
Ball Valve Red. Bore Flanged	1
Blind Flange	1
Gasket RF. C.A.F.	2
Pipe Nipple 50 mm	1
Stud Bolt with Nuts	8
Welding Neck Flange	1

* VENT POINT Fig. 2J

Run DN 20-50 Br DN 20

	No.
Branch: Table Page 1	1
Ball Valve Red. Bore Flanged	1
Blind Flange	1
Gasket RF. C.A.F.	2
Pipe Nipple 50 mm	1
Stud Bolt with Nuts	8
Welding Neck Flange	1

* VENT POINT Fig. 2J

Run DN 80-150 Br DN 20

	No.
Branch: Table Page 1	1
Ball Valve Red. Bore Flanged	1
Blind Flange	1
Gasket RF. C.A.F.	2
Pipe Nipple 50 mm	1
Stud Bolt with Nuts	8
Welding Neck Flange	1

Class No.: CP02	Page: 1	Content: General
Base Material: Alloy Steel (1.25 Cr - 0.5 Mo)	First Issue: Revision:	
Rating: PN 50 (Class 300)	Date:	
Corrosion Allowance: 1 mm	Sign:	

Temperature °C		0	50	100	150	200	250	300	350	400	450
urePress Barg.	DN 15-600	51.7	51.1	48.6	46.5	45.5	44.3	42.3	40.3	36.4	33.7

TABLE OF SCHEDULES

DN	Schedule
15	80
20	80
25	80
40	80
50	80
80	40
100	40
150	40
200	40
250	40
300	40
350	40
400	40
450	40
500	40
600	40

BRANCH CONNECTIONS 90 DEGREES

Run Size	BRANCH SIZE 15	20	25	40	50	80	100	150	200	250	300	350	400	450	500	600
600	C	C	C	C	E	E	E	E	E	E	E	E	E	E	E	A
500	C	C	C	C	E	E	E	E	E	E	E	E	E	E	A	
450	C	C	C	C	E	E	E	E	E	E	E	E	E	A		
400	C	C	C	C	E	E	E	E	E	E	E	E	A			
350	C	C	C	C	E	E	E	E	E	E	E	A				
300	C	C	C	C	E	E	E	E	E	E	A					
250	C	C	C	C	E	E	E	E	E	A						
200	C	C	C	C	E	E	E	E	A							
150	C	C	C	C	E	E	E	A								
100	C	C	C	C	D	D	A									
80	C	C	C	C	D	A										
50	C	C	C	B	A											
40	C	B	B	A												
25	B	B	A													
20	B	A														
15	A															

Note:
- Design limits are acc. flange rating ANSI B16.5 Material Group 1.9.
- For design temperature of 400°C and below, application of ASTM A193-B7 bolting material, and asbestos filled gascket is possible.
- Application of other types of branch connections is subject to company approval.

CODE CHARACTERS	EXPLANATION OF
A	Equal tee
B	Reducing tee
C	Branch fitting outlet socket weld
D	Pipe to pipe
E	Branch outlet reducing butt-weld

Class No.: CP02	Page: 2	Content: Material Descriptions

* PIPE

PIPE	Pipe	DN	15-400	ASTM	A335-P11 (Seamless)
		DN	450-600	ASTM	A691-1.25Cr (Welded)
PNPP	Pipe Nipple 50 mm	DN	15-40	ASTM	A335-P11

* FLANGES

BLFL	Blind Flange	DN	15-600	ASTM	A182-F11
SBFL	Spectacle Blind Flange	DN	15-600	ASTM	A387-11 CL. 2
SPRT	Spacer Ring Type (ANS Flanges)	DN	15-600	ASTM	A387-11 CL. 2
WNFL	Welding Neck Flange	DN	15-600	ASTM	A182-F11

* FITTINGS

CAPB	Cap	Butt-Weld. End	DN	15-600	ASTM	A234-WP11
E45B	Elbow 45 Deg.	Butt-Weld. End	DN	15-600	ASTM	A234-WP11
E90B	Elbow 90 Deg.	Butt-Weld. End	DN	15-600	ASTM	A234-WP11
TEEB	Equal Tee	Butt-Weld. End	DN	15-600	ASTM	A234-WP11
E45S	Elbow 45 Deg.	Socket-Weld. End	DN	15-40	ASTM	A182-F11
E90S	Elbow 90 Deg.	Socket-Weld. End	DN	15-40	ASTM	A182-F11
TEES	Equal Tee	Socket-Weld. End	DN	15-40	ASTM	A182-F11
COUS	Coupling	Socket-Weld. End	DN	15-40	ASTM	A182-F11
CAPS	Cap	Socket-Weld. End	DN	15-40	ASTM	A182-F11

* REDUCING FITTINGS

BROS	Branch Fitting Outlet Socket-Weld. End	DN	15-40	ASTM	A182-F11
BROB	Branch Outlet Red. Butt-Weld.	DN	50-600	ASTM	A182-F11
RECB	Reducer Conc. Butt-Weld. End	DN	20-600	ASTM	A234-WP11
REEB	Reducer Ecc. Butt-Weld. End	DN	20-600	ASTM	A234-WP11
TERB	Tee Reducing Butt-Weld. End	DN	20-25	ASTM	A234-WP11
TERS	Tee Reducing Socket-Weld. End	DN	20-40	ASTM	A182-F11

Note:
- For full material description see relevant MESC buying description.
- Where both socket weld and butt weld fittings are specified, preference is subject to company approval.

* VALVES

CHVF	Check Valve Flanged	DN	15-400	Body:	ASTM	A217-WC6, A182-F11
				Trim:	AISI	316, (L), Body Mat.
				All With Stellite /6 Facings		
GAVB	Gate Valve Butt-Weld. End	DN	15-600	Body:	ASTM	A217-WC6, A182-F11
				Trim:	AISI	316, (L), Body Mat.
				All With Stellite /6 Facings		
GLVB	Globe Valve Butt-Weld. End	DN	15-200	Body:	ASTM	A217-WC6, A182-F11
				Trim:	AISI	316, (L), Body Mat.
				All With Stellite /6 Facings		
GLVF	Globe Valve Flanged		----	Body:	ASTM	A217-WC6, A182-F11
				Trim:	AISI	316, (L), Body Mat.
				All With Stellite /6 Facings		

* MISCELLANEOUS

GKSW	Gasket, Spiral Wound	DN	15-600	AISI	304, Graphite Filled
					CS Centring-, AISI 304 Inner-R
ORFS	Orifice Flange Set	DN	50-600		ASTM A182-F11
STBT	Stud Bolt with Nuts		----	Studs:	ASTM A193-B16
			----	Nuts:	ASTM A194-4

Class No.: CP02	Page: 3	Content: Piping Components

ITEM DESCRIPTION		MESC	NOMINAL PIPE SIZE 15	20	25	40	50	80	100	150	200	250	300	350	400	450	500	600
* PIPE																		
Pipe		74.33.11	*	*	*	*	*	*	*	*	*	*	*	*	*			
		74.00.00														*	*	*
* FLANGES																		
Blind Flange		76.64.10	*	*	*	*	*	*	*	*	*	*	*	*	*	*	*	*
Spectacle Blind Flange		76.88.06	*	*	*	*	*	*	*	*	*	*	*	*	*	*	*	*
Spacer Ring Type (ANS Flanges)		76.88.00	*	*	*	*	*	*	*	*	*	*	*	*	*	*	*	*
Welding Neck Flange		76.64.80	*	*	*	*	*	*	*	*	*	*	*	*	*	*	*	*
* FITTINGS																		
Cap	Butt-Weld. End	76.32.18	*	*	*	*	*	*	*	*	*	*	*	*	*	*	*	*
Elbow 45 Deg.	Butt-Weld. End	76.32.38	*	*	*	*	*	*	*	*	*	*	*	*	*	*	*	*
Elbow 90 Deg.	Butt-Weld. End	76.32.39	*	*	*	*	*	*	*	*	*	*	*	*	*	*	*	*
Equal Tee	Butt-Weld. End	76.32.84	*	*	*	*	*	*	*	*	*	*	*	*	*	*	*	*
Elbow 45 Deg.	Socket-Weld. End	76.36.38	*	*	*	*												
Elbow 90 Deg.	Socket-Weld. End	76.36.39	*	*	*	*												
Equal Tee	Socket-Weld. End	76.36.84	*	*	*	*												
Coupling	Socket-Weld. End	76.36.28	*	*	*	*												
Cap	Socket-Weld. End	76.36.18	*	*	*	*												
* VALVES																		
Check Valve Flanged		75.39.13	*	*	*	*	*	*	*	*	*	*	*	*	*			
Gate Valve Butt-Weld. End		75.59.00	*	*	*	*	*	*	*	*	*	*	*	*	*	*	*	*
Globe Valve Butt-Weld. End		75.59.00	*	*	*	*	*	*	*	*	*							
Globe Valve Flanged		75.39.43	*	*	*	*	*	*	*	*	*							
* MISCELLANEOUS																		
Gasket, Spiral Wound		85.41.43	*	*	*	*	*	*	*	*	*	*	*	*	*	*	*	*
Orifice Flange Set		60.00.00					*	*	*	*	*	*	*	*	*	*	*	*

Class No.: CP02	Page: 4	Content: Reducing Piping Components

Run	Br.	BROB 76.80.00	RECB 76.32.70	REEB 76.32.71	TERB 76.32.85	TERS 76.36.85
20 ×	15		*	*	*	*
25 ×	15		*	*	*	*
25 ×	20		*	*	*	*
40 ×	20		*	*		*
40 ×	25		*	*		*
50 ×	25		*	*		
50 ×	40		*	*		
80 ×	50	*		*		
100 ×	50	*				
100 ×	80	*	*	*		
150 ×	80	*	*	*		
150 ×	100	*	*	*		
200 ×	80					
200 ×	100	*	*	*		
200 ×	150	*	*	*		
250 ×	80	*				
250 ×	100	*				
250 ×	150	*	*	*		
250 ×	200	*	*	*		
300 ×	80	*				
300 ×	100	*				
300 ×	150	*	*	*		
300 ×	200	*	*	*		
300 ×	250	*	*	*		
350 ×	80	*				
350 ×	100	*				
350 ×	150	*				
350 ×	200	*	*	*		
350 ×	250	*	*	*		
350 ×	300	*	*	*		

Run	Br.	BROB 76.80.00	RECB 76.32.70	REEB 76.32.71
400 ×	80	*		
400 ×	100	*		
400 ×	150	*		
400 ×	200	*	*	*
400 ×	250	*	*	*
400 ×	300	*	*	*
400 ×	350	*	*	*
450 ×	80	*		
450 ×	100	*		
450 ×	150	*		
450 ×	200	*		
450 ×	250	*	*	*
450 ×	300	*	*	*
450 ×	350	*	*	*
450 ×	400	*	*	*
500 ×	80	*		
500 ×	100	*		
500 ×	150	*		
500 ×	200	*		
500 ×	250	*		
500 ×	300	*	*	*
500 ×	350	*	*	*
500 ×	400	*	*	*
500 ×	450	*	*	*
600 ×	80	*		
600 ×	100	*		
600 ×	150	*		
600 ×	200	*		
600 ×	250	*		
600 ×	300	*		
600 ×	350	*		
600 ×	400	*	*	*
600 ×	450	*	*	*
600 ×	500	*	*	*

COMP. NAME	DESCRIPTION
BROS	Branch Fitting Outlet Socket Wekd. End
BROB	Branch Outlet Red. Butt-Weld
RECB	Reducer Conc. Butt-Weld. End
REEB	Reducer Ecc. Butt-Weld. End
TERB	Tee Reducing Butt-Weld. End
TERS	Tee Reducing Socket-Weld. End

Br.	Run-Pipe	BROS 76.80.26
15	40-150	*
	200-600	*
20	50-80	*
	100-600	*
25	50	*
	80-100	*
	150-600	*
40	80-100	*
	150-300	*
	350-600	*

Class No.: CP02	Page: 5	Content: Bolting and Assemblies

BOLT SET FLANGED JOINTS

DN	No.	Inch		mm	81.38.96
15	4	1/2	×	70	*
20	4	5/8	×	75	*
25	4	5/8	×	80	*
40	4	3/4	×	90	*
50	8	5/8	×	90	*
80	8	3/4	×	110	*
100	8	3/4	×	115	*
150	12	3/4	×	125	*
200	12	7/8	×	140	*
250	16	1	×	160	*
300	16	1-1/8	×	170	*
350	20	1-1/8	×	180	*
400	20	1-1/4	×	190	*
450	24	1-1/4	×	195	*
500	24	1-1/4	×	210	*
600	24	1-1/2	×	235	*

BOLT SET SPECTACLE/SPACER

DN	No.	Inch		mm	81.38.96
15	4	1/2	×	75	*
20	4	5/8	×	85	*
25	4	5/8	×	90	*
40	4	3/4	×	100	*
50	8	5/8	×	100	*
80	8	3/4	×	120	*
100	8	3/4	×	130	*
150	12	3/4	×	145	*
200	12	7/8	×	170	*
250	16	1	×	190	*
300	16	1-1/8	×	205	*
350	20	1-1/8	×	215	*
400	20	1-1/4	×	235	*
450	24	1-1/4	×	245	*
500	24	1-1/4	×	260	*
600	24	1-1/2	×	295	*

BOLT SET ORIFICE FLANGES

DN	No.	Inch		mm	81.38.96
15	4	5/8	×	120	*
20	4	5/8	×	120	*
25	4	5/8	×	120	*
40	4	3/4	×	130	*
50	8	5/8	×	150	*
80	8	3/4	×	150	*
100	12	3/4	×	140	*
150	12	3/4	×	140	*
200	12	7/8	×	150	*
250	16	1	×	170	*
300	16	1-1/8	×	190	*
350	20	1-1/8	×	195	*
400	20	1-1/4	×	210	*
450	24	1-1/4	×	220	*
500	24	1-1/4	×	230	*
600	24	1-1/2	×	260	*

* DRAIN POINT Fig. 0J

Run DN 15-25	Br DN 15
	No.
Branch: Table Page 1	1
Blind Flange	1
Gasket, RF. C.A.F.	2
Gate Valve Flanged	1
Pipe Nipple 50 mm	1
Stud Bolt with Nuts	8
Welding Neck Flange	1

* DRAIN POINT Fig. 0J

Run DN 40-40	Br DN 20	NO.
Branch: Table Page 1		1
Blind Flange		1
Gasket, RF. C.A.F.		2
Gate Valve Flanged		1
Pipe Nipple 50 mm		1
Stud Bolt with Nuts		8
Welding Neck Flange		1

* DRAIN POINT Fig. 0J

Run DN 50-600	Br DN 20	NO.
Branch: Table Page 1		1
Blind Flange		1
Gasket, RF. C.A.F.		2
Gate Valve Flanged		1
Pipe Nipple 50 mm		1
Stud Bolt with Nuts		8
Welding Neck Flange		1

* VENT POINT Fig. 1J

Run DN 15-25	Br DN 15	NO.
Branch: Table Page 1		1
Blind Flange		1
Gasket, RF. C.A.F.		2
Globe Valve Flanged		1
Pipe Nipple 50 mm		1
Stud Bolt with Nuts		8
Welding Neck Flange		1

* VENT POINT Fig. 1J

Run DN 40-40	Br DN 20	NO.
Branch: Table Page 1		1
Blind Flange		1
Gasket, RF. C.A.F.		2
Globe Valve Flanged		1
Pipe Nipple 50 mm		1
Stud Bolt with Nuts		8
Welding Neck Flange		1

* VENT POINT Fig. 1J

Run DN 50-600	Br DN 20	NO.
Branch: Table Page 1		1
Blind Flange		1
Gasket, RF. C.A.F.		2
Globe Valve Flanged		1
Pipe Nipple 50 mm		1
Stud Bolt with Nuts		8
Welding Neck Flange		1

Class No.: CP04	Page: 1	Content: General

Base Material: Alloy Steel (5 Cr. - 0.5 Mo.)	First Issue: Revision:	
Rating: PN 50 (Class 300)	Date:	
Corrosion Allowance: 1 mm	Sign:	

Temperature °C		0	50	100	150	200	250	300	350	400	450
urePress Barg.	DN 15-600	51.7	51.7	51.5	50.2	48.7	46.3	42.8	40.3	36.4	30.9

TABLE OF SCHEDULES

DN	Schedule
15	80
20	80
25	80
40	80
50	80
80	40
100	40
150	40
200	40
250	40
300	40
350	40
400	40
450	40
500	40
600	40

BRANCH CONNECTIONS 90 DEGREES

Run Size	BRANCH SIZE 15	20	25	40	50	80	100	150	200	250	300	350	400	450	500	600
600	C	C	C	C	E	E	E	E	E	E	E	E	E	E	E	A
500	C	C	C	C	E	E	E	E	E	E	E	E	E	E	A	
450	C	C	C	C	E	E	E	E	E	E	E	E	E	A		
400	C	C	C	C	E	E	E	E	E	E	E	E	A			
350	C	C	C	C	E	E	E	E	E	E	E	A				
300	C	C	C	C	E	E	E	E	E	E	A					
250	C	C	C	C	E	E	E	E	E	A						
200	C	C	C	C	E	E	E	E	A							
150	C	C	C	C	E	E	E	A								
100	C	C	C	C	E	D	A									
80	C	C	C	C	D	A										
50	C	C	C	B	A											
40	C	B	B	A												
25	B	B	A													
20	B	A														
15	A															

NOTES:

- Design limits are acc. flange rating ANSI B16.5 Material Group 1.13.
- For design temperature of 400°C and below, application of ASTM A193-B7 bolting material, and asbestos filled gascket is possible.
- Application of other types of branch connections is subject to company approval.

CODE	EXPLANATION OF CHARACTERS
A	Equal tee
B	Reducing tee
C	Branch fitting outlet socket weld
D	Pipe to pipe
E	Branch outlet reducing butt-weld

Class No.: CP04	Page: 2	Content: Material Descriptions

* PIPE

PIPE	Pipe	DN	15-400	ASTM	A335-P5 (Seamless)
		DN	450-600	ASTM	A691-5 CR (Welded)
PNPP	Pipe Nipple 50 mm	DN	15-40	ASTM	A335-P5

* FLANGES

BLFL	Blind Flange	DN	15-600	ASTM	A182-F5
SBFL	Spectacle Blind Flange	DN	15-600	ASTM	A387-5 CL. 2
SPRT	Spacer Ring Type (ANS Flanges)	DN	15-600	ASTM	A387-5 CL. 2
WNFL	Welding Neck Flange	DN	15-600	ASTM	A182-F5

* FITTINGS

CAPB	Cap	Butt-Weld. End	DN	15-600	ASTM	A234-WP5
E45B	Elbow 45 Deg.	Butt-Weld. End	DN	15-600	ASTM	A234-WP5
E90B	Elbow 90 Deg.	Butt-Weld. End	DN	15-600	ASTM	A234-WP5
TEEB	Equal Tee	Butt-Weld. End	DN	15-600	ASTM	A234-WP5
E45S	Elbow 45 Deg.	Socket-Weld. End	DN	15-40	ASTM	A182-F5
E90S	Elbow 90 Deg.	Socket-Weld. End	DN	15-40	ASTM	A182-F5
TEES	Equal Tee	Socket-Weld. End	DN	15-40	ASTM	A182-F5
COUS	Coupling	Socket-Weld. End	DN	15-40	ASTM	A182-F5
CAPS	Cap	Socket-Weld. End	DN	15-40	ASTM	A182-F5

* REDUCING FITTINGS

BROS	Branch Fitting Outlet Socket Weld. End	DN	15-40	ASTM	A182-F5
BROB	Branch Outlet Red. Butt-Weld.	DN	50-600	ASTM	A182-F5
RECB	Reducer Conc. Butt-Weld. End	DN	20-600	ASTM	A234-WP5
REEB	Reducer Ecc. Butt-Weld. End	DN	20-600	ASTM	A234-WP5
TERB	Tee Reducing Butt-Weld. End	DN	20-25	ASTM	A234-WP5
TERS	Tee Reducing Socket-Weld. End	DN	20-40	ASTM	A182-F5

Note:
- For full material description see relevant MESC buying description.
- Where both socket weld and butt weld fittings are specified, preference is subject to company approval.

* VALVES

CHVF	Check Valve Flanged	DN	15-400	Body:	ASTM	A217-C5, A182-F5
				Trim:	AISI	316, 316L
GAVF	Gate Valve Flanged	DN	15-600	Body:	ASTM	A217-C5, A182-F5
				Trim:	AISI	316, 316L
GLVF	Globe Valve Flanged	DN	15-200	Body:	ASTM	A217-C5, A182-F5
				Trim:	AISI	316, 316L

* MISCELLANEOUS

GKSW	Gasket, Spiral Wound	DN	15-600	AISI	304 Graphite Filled CS Centring-, AISI 304 Inner-R	
ORFS	Orifice Flange Set	DN	50-600		ASTM	A182-F5
STBT	Stud Bolt with Nuts		----	Studs:	ASTM	A193-B16
			----	Nuts:	ASTM	A194-4

Class No.: CP04	Page: 3	Content: Piping Components

ITEM DESCRIPTION		MESC	NOMINAL PIPE SIZE 15	20	25	40	50	80	100	150	200	250	300	350	400	450	500	600
* PIPE																		
Pipe		74.33.31	*	*	*	*	*	*	*	*	*	*	*	*	*			
		74.33.32														*	*	*
* FLANGES																		
Blind Flange		76.64.10	*	*	*	*	*	*	*	*	*	*	*	*	*	*	*	*
Spectacle Blind Flange		76.88.07	*	*	*	*	*	*	*	*	*	*	*	*	*	*	*	*
Spacer Ring Type (ANS Flanges)		76.88.00	*	*	*	*	*	*	*	*	*	*	*	*	*	*	*	*
Welding Neck Flange		76.64.84	*	*	*	*	*	*	*	*	*	*	*	*	*	*	*	*
* FITTINGS																		
Cap	Butt-Weld. End	76.32.18	*	*	*	*	*	*	*	*	*	*	*	*	*	*	*	*
Elbow 45 Deg.	Butt-Weld. End	76.32.38	*	*	*	*	*	*	*	*	*	*	*	*	*	*	*	*
Elbow 90 Deg.	Butt-Weld. End	76.32.39/40	*	*	*	*	*	*	*	*	*	*	*	*	*	*	*	*
Equal Tee	Butt-Weld. End	76.32.84	*	*	*	*	*	*	*	*	*	*	*	*	*	*	*	*
Elbow 45 Deg.	Socket-Weld. End	76.36.38	*	*	*	*												
Elbow 90 Deg.	Socket-Weld. End	76.36.39	*	*	*	*												
Equal Tee	Socket-Weld. End	76.36.84	*	*	*	*												
Coupling	Socket-Weld. End	76.36.28	*	*	*	*												
Cap	Socket-Weld. End	76.36.18	*	*	*	*												
* VALVES																		
Check Valve Flanged		75.39.13	*	*	*	*	*	*	*	*	*	*	*	*	*			
Gate Valve Flanged		75.39.33	*	*	*	*	*	*	*	*	*	*	*	*	*	*	*	*
Globe Valve Flanged		75.39.43	*	*	*	*	*	*	*	*	*							
* MISCELLANEOUS																		
Gasket, Spiral Wound		85.41.43	*	*	*	*	*	*	*	*	*	*	*	*	*	*	*	*
Orifice Flange Set		60.00.00					*	*	*	*	*	*	*	*	*	*	*	*

Class No.: CP04	Page: 4	Content: Reducing Piping Components

Run	Br.	BROB 76.80.00	RECB 76.32.70	REEB 76.32.71	TERB 76.32.85	TERS 76.36.85
20 ×	15		*	*	*	*
25 ×	15		*	*	*	*
25 ×	20		*	*	*	*
40 ×	15		*	*		*
40 ×	20		*	*		*
40 ×	25		*	*		*
50 ×	25		*	*		
50 ×	40		*	*		
80 ×	40		*	*		
80 ×	50		*	*		
100 ×	50		*	*		
100 ×	80	*	*	*		
150 ×	50	*				
150 ×	80	*	*	*		
150 ×	100	*	*	*		
200 ×	50	*				
200 ×	80	*				
200 ×	100	*	*	*		
200 ×	150	*	*	*		
250 ×	50	*				
250 ×	80	*				
250 ×	100	*				
250 ×	150	*	*	*		
250 ×	200	*	*	*		
300 ×	50	*				
300 ×	80	*				
300 ×	100	*				
300 ×	150	*	*	*		
300 ×	200	*	*	*		
300 ×	250	*	*	*		
350 ×	50	*				
350 ×	80	*				
350 ×	100	*				
350 ×	150	*				
350 ×	200	*	*	*		
350 ×	250	*	*	*		
350 ×	300	*	*	*		

Run	Br.	BROB 76.80.00	RECB 76.32.70	REEB 76.32.71
400 ×	50	*		
400 ×	80	*		
400 ×	100	*		
400 ×	150	*		
400 ×	200	*	*	*
400 ×	250	*	*	*
400 ×	300	*	*	*
400 ×	350	*	*	*
450 ×	50	*		
450 ×	80	*		
450 ×	100	*		
450 ×	150	*		
450 ×	200	*		
450 ×	250	*	*	*
450 ×	300	*	*	*
450 ×	350	*	*	*
450 ×	400	*	*	*
500 ×	50	*		
500 ×	80	*		
500 ×	100	*		
500 ×	150	*		
500 ×	200	*		
500 ×	250	*		
500 ×	300	*	*	*
500 ×	350	*	*	*
500 ×	400	*	*	*
500 ×	450	*	*	*
600 ×	50	*		
600 ×	80	*		
600 ×	100	*		
600 ×	150	*		
600 ×	200	*		
600 ×	250	*		
600 ×	300	*		
600 ×	350	*		
600 ×	400	*	*	*
600 ×	450	*	*	*
600 ×	500	*	*	*

COMP. NAME	DESCRIPTION
BROS	Branch Fitting Outlet Socket Wekd. End
BROB	Branch Outlet Red. Butt-Weld
RECB	Reducer Conc. Butt-Weld. End
REEB	Reducer Ecc. Butt-Weld. End
TERB	Tee Reducing Butt-Weld. End
TERS	Tee Reducing Socket-Weld. End

Br.	Run-Pipe	BROS 76.80.26
15	40-150	*
	200-600	*
20	50-80	*
	100-600	*
25	50	*
	80-100	*
	150-600	*
40	80-100	*
	150-300	*
	350-600	*

Class No.: CP04	Page: 5	Content: Bolting and Assemblies

BOLT SET FLANGED JOINTS

DN	No.	Inch		mm	81.38.96
15	4	1/2	×	70	*
20	4	5/8	×	75	*
25	4	5/8	×	80	*
40	4	3/4	×	90	*
50	8	5/8	×	90	*
80	8	3/4	×	110	*
100	8	3/4	×	115	*
150	12	3/4	×	125	*
200	12	7/8	×	140	*
250	16	1	×	160	*
300	16	1-1/8	×	170	*
350	20	1-1/8	×	180	*
400	20	1-1/4	×	190	*
450	24	1-1/4	×	195	*
500	24	1-1/4	×	210	*
600	24	1-1/2	×	235	*

BOLT SET SPECTACLE/SPACER

DN	No.	Inch		mm	81.38.96
15	4	1/2	×	75	*
20	4	5/8	×	85	*
25	4	5/8	×	90	*
40	4	3/4	×	100	*
50	8	5/8	×	100	*
80	8	3/4	×	120	*
100	8	3/4	×	130	*
150	12	3/4	×	145	*
200	12	7/8	×	170	*
250	16	1	×	190	*
300	16	1-1/8	×	205	*
350	20	1-1/8	×	215	*
400	20	1-1/4	×	235	*
450	24	1-1/4	×	245	*
500	24	1-1/4	×	260	*
600	24	1-1/2	×	295	*

BOLT SET ORIFICE FLANGES

DN	No.	Inch		mm	81.38.96
15	4	5/8	×	120	*
20	4	5/8	×	120	*
25	4	5/8	×	120	*
40	4	3/4	×	130	*
50	8	5/8	×	150	*
80	8	3/4	×	150	*
100	12	3/4	×	140	*
150	12	3/4	×	140	*
200	12	7/8	×	150	*
250	16	1	×	170	*
300	16	1-1/8	×	190	*
350	20	1-1/8	×	195	*
400	20	1-1/4	×	210	*
450	24	1-1/4	×	220	*
500	24	1-1/4	×	230	*
600	24	1-1/2	×	260	*

* DRAIN POINT Fig. 0J

Run DN 15-25 Br DN 15

	No.
Branch: Table Page 1	1
Blind Flange	1
Gasket Spiral Wound	2
Gate Valve Flanged	1
Pipe Nipple 50 mm	1
Stud Bolt with Nuts	8
Welding Neck Flange	1

* DRAIN POINT Fig. 0J

Run DN 40-40 Br DN 20

	No.
Branch: Table Page 1	1
Blind Flange	1
Gasket Spiral Wound	2
Gate Valve Flanged	1
Pipe Nipple 50 mm	1
Stud Bolt with Nuts	8
Welding Neck Flange	1

DRAIN POINT Fig. 0J

Run DN 50-600 Br DN 20

	No.
Branch: Table Page 1	1
Blind Flange	1
Gasket Spiral Wound	2
Gate Valve Flanged	1
Pipe Nipple 50 mm	1
Stud Bolt with Nuts	8
Welding Neck Flange	1

* VENT POINT Fig. 1J

Run DN 15-25 Br DN 15

	No.
Branch: Table Page 1	1
Blind Flange	1
Gasket Spiral Wound	2
Globe Valve Flanged	1
Pipe Nipple 50 mm	1
Stud Bolt with Nuts	8
Welding Neck Flange	1

* VENT POINT Fig. 1J

Run DN 40-40 Br DN 20

	No.
Branch: Table Page 1	1
Blind Flange	1
Gasket Spiral Wound	2
Globe Valve Flanged	1
Pipe Nipple 50 mm	1
Stud Bolt with Nuts	8
Welding Neck Flange	1

Run DN 50-600 Br DN 20 NO.

Branch: Table Page 1	1
Blind Flange	1
Gasket Spiral Wound	2
Globe Valve Flanged	1
Pipe Nipple 50 mm	1
Stud Bolt with Nuts	8
Welding Neck Flange	1

Class No.: CS02	Page: 1	Content: General
Base Material: Stainless Steel AISI 316	First Issue: Revision:	
Rating: PN 50 (Class 300)	Date:	
Corrosion Allowance: 0 mm	Sign:	

Temperature °C		0	50	100	150	200	250	300	350	400
urePress Barg.	DN 15-300	49.6	48.1	42.2	38.5	35.7	33.5	31.6	30.4	29.2

TABLE OF SCHEDULES

DN	Schedule
15	40S
20	40S
25	10S
40	10S
50	10S
80	10S
100	10S
150	40S
200	40S
250	40S
300	40S

BRANCH CONNECTIONS 90 DEGREES

Run Size	BRANCH SIZE 15	20	25	40	50	80	100	150	200	250	300
300	C	C	C	C	E	E	E	E	E	E	A
250	C	C	C	C	E	E	E	E	E	A	
200	C	C	C	C	E	E	E	E	A		
150	C	C	C	C	E	E	E	A			
100	C	C	C	C	E	E	A				
80	C	C	C	C	E	A					
50	C	C	C	B	A						
40	C	B	B	A							
25	B	B	A								
20	B	A									
15	A										

Note:
- Design limits are acc. flange rating ANSI B16.5 Material Group 2.2.
- Blind flanges to be provided with liner.
- For economic reasons use lap-joint flanges from DN 15 up to DN 200.
- Spectacle blinds to be installed between welding neck flanges.
- Application of other types of branch connections is subject to company approval.

CODE	EXPLANATION OF CHARACTERS
A	Equal tee
B	Reducing tee
C	Branch fitting outlet socket weld
E	Branch outlet reducing butt-weld

Class No.: CS02	Page: 2	Content: Material Descriptions

* PIPE

PIPE	Pipe	DN	15-300	ASTM	A312-TP316L (Seamless or Welded)
PNPP	Pipe Nipple 50 mm	DN	15-40	ASTM	A312-TP316L (Seamless)

* FLANGES

BLFL	Blind Flange	DN	15-300	ASTM	A182-F316
SBFL	Spectacle Blind Flange	DN	15-300	ASTM	A240-TP316
WNFL	Welding Neck Flange	DN	15-300	ASTM	A182-F316

* FITTINGS

CAPB	Cap	Butt-Weld. End	DN	15-300	ASTM	A403-WP316L
E45B	Elbow 45 Deg.	Butt-Weld. End	DN	15-300	ASTM	A403-WP316L
E90B	Elbow 90 Deg.	Butt-Weld. End	DN	15-300	ASTM	A403-WP316L
TEEB	Equal Tee	Butt-Weld. End	DN	15-300	ASTM	A403-WP316L
E45S	Elbow 45 Deg.	Socket-Weld. End	DN	15-40	ASTM	A182-F316
E90S	Elbow 90 Deg.	Socket-Weld. End	DN	15-40	ASTM	A182-F316
TEES	Equal Tee	Socket-Weld. End	DN	15-40	ASTM	A182-F316
COUS	Coupling	Socket-Weld. End	DN	15-40	ASTM	A182-F316
CAPS	Cap	Socket-Weld. End	DN	15-40	ASTM	A182-F316

* REDUCING FITTINGS

BROS	Branch Fitting Outlet Socket-Weld. End	DN	15-40	ASTM	A182-F316
BROB	Branch Outlet Red. Butt-Weld.	DN	50-300	ASTM	A182-F316
RECB	Reducer Conc. Butt-Weld. End	DN	20-300	ASTM	A403-WP316L
REEB	Reducer Ecc. Butt-Weld. End	DN	20-300	ASTM	A403-WP316L
TERB	Tee Reducing Butt-Weld. End	DN	20-300	ASTM	A403-WP316L
TERS	Tee Reducing Socket-Weld. End	DN	20-40	ASTM	A182-F316

Note:
- For full material description see relevant buying description.
- Where both socket weld and butt weld fittings are specified, preference is subject to company approval.

* VALVES

CHVF	Check Valve Flanged	DN	15-300	Body:	ASTM	A351-CF8M, A182-F316
				Trim:	AISI	316, 316L
GAVF	Gate Valve Flanged	DN	15-300	Body:	ASTM	A351-CF8M, A182-F316
				Trim:	AISI	316, 316L
GLVF	Globe Valve Flanged	DN	15-200	Body:	ASTM	A351-CF8M, A182-F316
				Trim:	AISI	316, 316L

* MISCELLANEOUS

GKTI	Gasket, RF. C.A.F.	DN 15-300	C.A.F.		
ORFS	Orifice Flange Set	DN 50-300		ASTM	A182-F316
STBT	Stud Bolt with Nuts		----	Studs:	ASTM A193-B7
				Nuts:	ASTM A194-2H

Class No.: CS02	Page: 3	Content: Piping Components

ITEM DESCRIPTION			NOMINAL PIPE SIZE 15	20	25	40	50	80	100	150	200	250	300
* PIPE													
Pipe		74.36.40	*	*	*	*	*	*	*	*	*	*	*
* FLANGES													
Blind Flange		76.65.10	*	*	*	*	*	*	*	*	*	*	*
Lap-Joint Flange		76.62.00	*	*	*	*	*	*	*	*	*		
Spectacle Blind Flange		76.88.07	*	*	*	*	*	*	*	*	*	*	*
Welding Neck Flange		76.65.80			*	*	*	*	*				
* FITTINGS													
Cap	Butt-Weld. End	76.33.18	*	*	*	*	*	*	*	*	*	*	*
Elbow 45 Deg.	Butt-Weld. End	76.33.38	*	*	*	*	*	*	*	*	*	*	*
Elbow 90 Deg.	Butt-Weld. End	76.33.39	*	*	*	*	*	*	*	*	*		
Equal Tee	Butt-Weld. End	76.33.84	*	*	*	*	*	*	*	*	*	*	*
Elbow 45 Deg.	Socket-Weld. End	76.37.38	*	*	*	*							
Elbow 90 Deg.	Socket-Weld. End	76.37.39	*	*	*	*							
Equal Tee	Socket-Weld. End	76.37.84	*	*	*	*							
Coupling	Socket-Weld. End	76.37.28	*	*	*	*							
Cap	Socket-Weld. End	76.37.18	*	*	*	*							
* VALVES													
Check Valve Flanged		75.40.13	*	*	*	*	*	*	*	*	*	*	*
Gate Valve Flanged		75.40.33	*	*	*	*	*	*	*	*	*	*	*
Globe Valve Flanged		75.40.41	*	*	*	*	*	*	*	*	*		
* MISCELLANEOUS													
Gasket, RF. C.A.F.		85.31.15/17	*	*	*	*	*	*	*	*	*	*	*
Orifice Flange Set		60.00.00					*	*	*	*	*	*	*

Class No.:	CS02	Page:	4	Content:	Reducing Piping Components

Run	Br.	BROB 76.80.00	RECB 76.33.70	REEB 76.33.71	TERB 76.33.85	TERS 76.37.85
20 ×	15		*	*	*	*
25 ×	15		*	*	*	*
25 ×	20		*	*	*	*
40 ×	15				*	*
40 ×	20		*	*	*	*
40 ×	25		*	*	*	*
50 ×	20				*	
50 ×	25		*	*	*	
50 ×	40	*	*	*		
80 ×	40		*	*	*	
80 ×	50	*	*	*	*	
100 ×	40				*	
100 ×	50	*	*	*	*	
100 ×	80	*	*	*	*	
150 ×	50	*				
150 ×	80	*	*	*	*	
150 ×	100	*	*	*	*	
200 ×	50	*				
200 ×	80	*				
200 ×	100	*	*	*	*	
200 ×	150	*	*	*	*	
250 ×	50	*				
250 ×	80	*				
250 ×	100	*			*	
250 ×	150	*	*	*	*	
250 ×	200	*	*	*	*	
300 ×	50	*				
300 ×	80	*				
300 ×	100	*				
300 ×	150	*	*	*	*	
300 ×	200	*	*	*	*	
300 ×	250	*	*	*	*	

COMP. NAME	DESCRIPTION
BROS	Branch Fitting Outlet Socket Weld. End
BROB	Branch Outlet Red. Butt-Weld
RECB	Reducer Conc. Butt-Weld. End
REEB	Reducer Ecc. Butt-Weld. End
TERB	Tee Reducing Butt-Weld. End
TERS	Tee Reducing Socket-Weld. End

Br.	Run-Pipe	BROS 76.80.26
15	40-150	*
	200-300	*
20	50-80	*
	100-300	*
25	50	*
	80-100	*
	150-300	*
40	80-100	*
	150-300	*

Class No.:	CS02	Page:	5	Content:	Bolting and Assemblies

BOLT SET FLANGED JOINTS

DN	No.	Inch		mm	81.38.61
15	4	1/2	×	70	*
20	4	5/8	×	75	*
25	4	5/8	×	80	*
40	4	3/4	×	90	*
50	8	5/8	×	90	*
80	8	3/4	×	110	*
100	8	3/4	×	115	*
150	12	3/4	×	125	*
200	12	7/8	×	140	*
250	16	1	×	160	*
300	16	11/8	×	170	*

BOLT SET SPECTACLE/SPACER

DN	No.	Inch		mm	81.38.61
15	4	1/2	×	75	*
20	4	5/8	×	85	*
25	4	5/8	×	90	*
40	4	3/4	×	100	*
50	8	5/8	×	100	*
80	8	3/4	×	120	*
100	8	3/4	×	130	*
150	12	3/4	×	145	*
200	12	7/8	×	170	*
250	16	1	×	190	*
300	16	11/8	×	205	*

BOLT SET FOR ORIFICE FLANGES

DN	No.	Inch		mm	81.38.61
15	4	5/8	×	120	*
20	4	5/8	×	120	*
25	4	5/8	×	120	*
40	4	3/4	×	130	*
50	8	5/8	×	150	*
80	8	3/4	×	150	*
100	12	3/4	×	140	*
150	12	3/4	×	140	*
200	12	7/8	×	150	*
250	16	1	×	170	*
300	16	11/8	×	190	*

* DRAIN POINT Fig. 0I

Run DN 15-25 Br DN 15

	No.
Branch: Table Page 1	1
Blind Flange	1
Gasket RF C.A.F.	2
Gate Valve Flange	1
Stud Bolt with Nuts	8
Welding Neck Flange	1

* DRAIN POINT Fig. 0I

Run DN 40-40 Br DN 20

	No.
Branch: Table Page 1	1
Blind Flange	1
Gasket RF C.A.F.	2
Gate Valve Flange	1
Stud Bolt with Nuts	8
Welding Neck Flange	1

* DRAIN POINT Fig. 0J

Run DN 50-300 Br DN 20

	No.
Branch: Table Page 1	1
Blind Flange	1
Gasket RF C.A.F.	2
Gate Valve Flange	1
Pipe Nipple 50 mm	1
Stud Bolt with Nuts	8
Welding Neck Flange	1

* VENT POINT Fig. 1I

Run DN 15-25 Br DN 15

	No.
Branch: Table Page 1	1
Blind Flange	1
Gasket RF C.A.F.	2
Globe Valve Flange	1
Stud Bolt with Nuts	8
Welding Neck Flange	1

VENT POINT Fig. 1I

Run DN 40-40 Br DN 20

	No.
Branch: Table Page 1	1
Blind Flange	1
Gasket RF C.A.F.	2
Globe Valve Flange	1
Stud Bolt with Nuts	8
Welding Neck Flange	1

* VENT POINT Fig. 1I

Run DN 50-300 Br DN 20

	No.
Branch: Table Page 1	1
Blind Flange	1
Gasket RF C.A.F.	2
Globe Valve Flange	1
Pipe Nipple 50 mm	1
Stud Bolt with Nuts	8
Welding Neck Flange	1

Class No.: CS04	Page: 1	Content: General
Base Material: Stainless Steel AISI 304, LT	First Issue: Revision:	
Rating: PN 50 (Class 300)	Date:	
Corrosion Allowance: 0 mm	Sign:	

Temperature °C		-200	0	50	100	125	150
urePress Barg.	DN 15-80	49.6	49.6	47.8	40.7	38.0	29.0
	DN 100-150	42.0	42.0	42.0	39.0	32.0	24.0
	DN 200-300	31.0	31.0	31.0	29.0	23.0	18.0

TABLE OF SCHEDULES

DN	Schedule
15	40S
20	40S
25	10S
40	10S
50	10S
80	10S
100	10S
150	40S
200	40S
250	40S
300	40S

BRANCH CONNECTIONS 90 DEGREES

Run Size	BRANCH SIZE 15	20	25	40	50	80	100	150	200	250	300
300	C	C	C	C	E	E	E	E	E	E	A
250	C	C	C	C	E	E	E	E	E	A	
200	C	C	C	C	E	E	E	E	A		
150	C	C	C	C	E	E	E	A			
100	C	C	C	C	E	E	A				
80	C	C	C	C	E	A					
50	C	C	C	B	A						
40	C	B	B	A							
25	B	B	A								
20	B	A									
15	A										

Note:
- Design limits are acc. flange rating ANSI B16.5 Material Group 2.1 and to ball valve rating acc. BS 5351.
- Application of other types of branch connections is subject to company approval.

CODE	EXPLANATION OF CHARACTERS
A	Equal tee
B	Reducing tee
C	Branch fitting outlet socket weld
E	Branch outlet reducing butt-weld

Class No.: CS04	Page: 2	Content: Material Descriptions

* PIPE

PIPE	Pipe	DN	15-300 (Seamless or Welded)	ASTM	A312-TP304
PNPP	Pipe Nipple 50 mm	DN	15-40 (Seamless)	ASTM	A312-TP304

* FLANGES

BLFL	Blind Flange	DN	15-300	ASTM	A182-F304
SBFL	Spectacle Blind Flange	DN	15-300	ASTM	A240-TP304
SPRT	Spacer Ring Type (ANS Flanges)	DN	15-300	ASTM	A240-TP304
WNFL	Welding Neck Flange	DN	15-300	ASTM	A182-F304

* FITTINGS

CAPB	Cap	Butt-Weld. End	DN	15-300	ASTM	A403-WP304
E45B	Elbow 45 Deg.	Butt-Weld. End	DN	15-300	ASTM	A403-WP304
E90B	Elbow 90 Deg.	Butt-Weld. End	DN	15-300	ASTM	A403-WP304
TEEB	Equal Tee	Butt-Weld. End	DN	15-300	ASTM	A403-WP304
E45S	Elbow 45 Deg.	Socket-Weld. End	DN	15-40	ASTM	A182-F304
E90S	Elbow 90 Deg.	Socket-Weld. End	DN	15-40	ASTM	A182-F304
TEES	Equal Tee	Socket-Weld. End	DN	15-40	ASTM	A182-F304
COUS	Coupling	Socket-Weld. End	DN	15-40	ASTM	A182-F304
CAPS	Cap	Socket-Weld. End	DN	15-40	ASTM	A182-F304

* REDUCING FITTINGS

BROS	Branch Fitting Outlet Socket-Weld. End	DN	15-40	ASTM	A182-F304
BROB	Branch Outlet Red. Butt-Weld.	DN	50-300	ASTM	A182-F304
RECB	Reducer Conc. Butt-Weld. End	DN	20-300	ASTM	A403-WP304
REEB	Reducer Ecc. Butt-Weld. End	DN	20-300	ASTM	A403-WP304
TERB	Tee Reducing Butt-Weld. End	DN	20-50	ASTM	A403-WP304
TERS	Tee Reducing Socket-Weld. End	DN	20-40	ASTM	A182-F304

Note:
- For full material description see relevant buying description.
- Where both socket weld and butt weld fittings are specified, preference is subject to company approval.

* VALVES

BARF	Ball Valve Red. Bore Flanged	DN	15-250	Body:	ASTM	A351-CF8M, A182-F316
				Ball/Stem:	AISI	316, 316L
				Seats:	PTFE	
GHVF	Check Valve Flanged	DN	15-300	Body:	ASTM	A351-CF8M, A182-F316
				Trim:	AISI	316, 316L
GAVF	Gate Valve Flanged	DN	15-300	Body:	ASTM	A351-CF8M, A182-F316
				Trim:	AISI	316, 316L
GLVF	Globe Valve Flanged	DN	15-200	Body:	ASTM	A351-CF8M, A182-F316
				Trim:	AISI	316, 316L

* MISCELLANEOUS

GKTI	Gasket, RF. C.A.F.	DN	15-300	C.A.F.		
ORFS	Orifice Flange Set	DN	50-300		ASTM	A182-F304
STBT	Stud Bolt with Nuts		- ---	Bollts:	(Dia. 1.½") ASTM A193-B8M2	
				Nuts:	ASTM	A194 GR 8M
				Studs:	ASTM	A193-B8
				Nuts:	ASTM	A194-8

Class No.: CS04	Page: 3	Content: Piping Components

ITEM DESCRIPTION			NOMINAL PIPE SIZE 15	20	25	40	50	80	100	150	200	250	300
* PIPE													
Pipe		74.36.10	*	*	*	*	*	*	*	*	*	*	*
* FLANGES													
Blind Flange		76.65.10	*	*	*	*	*	*	*	*	*	*	*
Spectacle Blind Flange		76.88.07	*	*	*	*	*	*	*	*	*	*	*
Spacer Ring Type (ANS Flanges)		76.88.00	*	*	*	*	*	*	*	*	*	*	*
Welding Neck Flange		76.65.79	*	*	*	*	*	*	*	*	*	*	*
* FITTINGS													
Cap	Butt-Weld. End	76.33.18	*	*	*	*	*	*	*	*	*	*	*
Elbow 45 Deg.	Butt-Weld. End	76.33.38	*	*	*	*	*	*	*	*	*	*	*
Elbow 90 Deg.	Butt-Weld. End	76.33.40	*	*	*	*	*	*	*	*	*	*	*
Equal Tee	Butt-Weld. End	76.33.84	*	*	*	*	*	*	*	*	*	*	*
Elbow 45 Deg.	Socket-Weld. End	76.37.38	*	*	*	*							
Elbow 90 Deg.	Socket-Weld. End	76.37.39	*	*	*	*							
Equal Tee	Socket-Weld. End	76.37.84	*	*	*	*							
Coupling	Socket-Weld. End	76.37.28	*	*	*	*							
Cap	Socket-Weld. End	76.37.18	*	*	*	*							
* VALVES													
Ball Valve Red. Bore Flanged		75.72.00	*	*	*	*	*	*	*	*	*	*	
Check Valve Flanged		75.40.13	*	*	*	*	*	*	*	*	*	*	*
Gate Valve Flanged		75.40.33	*	*	*	*	*	*	*	*	*	*	*
Globe Valve Flanged		75.40.41	*	*	*	*	*	*	*	*	*		
* MISCELLANEOUS													
Gasket, RF. C.A.F.		85.31.15/17	*	*	*	*	*	*	*	*	*	*	*
Orifice Flange Set		60.00.00					*	*	*	*	*	*	*

Class No.: CS04	Page: 4	Content: Reducing Piping Components

Run	×	Br.	BROB 76.80.00	RECB 76.33.70	REEB 76.33.71	TERB 76.33.90	TERS 76.37.85
20	×	15		*	*	*	*
25	×	15		*	*	*	*
25	×	20		*	*	*	*
40	×	20		*	*		*
40	×	25		*	*	*	*
50	×	25		*	*		
50	×	40		*	*	*	
80	×	40		*	*		
80	×	50	*	*	*		
100	×	50	*	*	*		
100	×	80	*	*	*		
150	×	50	*				
150	×	80	*	*	*		
150	×	100	*	*	*		
200	×	50	*				
200	×	80	*				
200	×	100	*	*	*		
200	×	150	*	*	*		
250	×	50	*				
250	×	80	*				
250	×	100	*	*	*		
250	×	150	*	*	*		
250	×	200	*				
300	×	50	*				
300	×	80	*				
300	×	100	*				
300	×	150	*	*	*		
300	×	200	*	*	*		
300	×	250	*	*	*		

COMP. NAME	DESCRIPTION
BROS	Branch Fitting Outlet Socket Weld. End
BROB	Branch Outlet Red. Butt-Weld
RECB	Reducer Conc. Butt-Weld. End
REEB	Reducer Ecc. Butt-Weld. End
TERB	Tee Reducing Butt-Weld. End
TERS	Tee Reducing Socket-Weld. End

Br.	Run-Pipe	BROS 76.80.26
15	40-150	*
	200-300	*
20	50-80	*
	100-300	*
25	50	*
	80-100	*
	150-300	*
40	80-100	*
	150-300	*

Class No.: CS04	Page: 5	Content: Bolting and Assemblies

BOLT SET FLANGED JOINTS

DN	No.	Inch		mm	81.38.43
15	4	1/2	×	70	*
20	4	5/8	×	75	*
25	4	5/8	×	80	*
40	4	3/4	×	90	*
50	8	5/8	×	90	*
80	8	3/4	×	110	*
100	8	3/4	×	115	*
150	12	3/4	×	125	*
200	12	7/8	×	140	*
250	16	1	×	160	*
300	16	11/8	×	170	*

BOLT SET SPECTACLE/SPACER

DN	No.	Inch		mm	81.38.43
15	4	1/2	×	75	*
20	4	5/8	×	85	*
25	4	5/8	×	90	*
40	4	3/4	×	100	*
50	8	5/8	×	100	*
80	8	3/4	×	120	*
100	8	3/4	×	130	*
150	12	3/4	×	145	*
200	12	7/8	×	170	*
250	16	1	×	190	*
300	16	11/8	×	205	*

BOLT SET FOR ORIFICE FLANGES

DN	No.	Inch		mm	81.38.43
15	4	5/8	×	120	*
20	4	5/8	×	120	*
25	4	5/8	×	120	*
40	4	3/4	×	130	*
50	8	5/8	×	150	*
80	8	3/4	×	150	*
100	12	3/4	×	140	*
150	12	3/4	×	140	*
200	12	7/8	×	150	*
250	16	1	×	170	*
300	16	11/8	×	190	*

* DRAIN POINT Fig. 2J

Run DN 15-25 Br DN 15

	No.
Branch: Table Page 1	1
Ball Valve Red. Bore Flanged	1
Blind Flange	1
Gasket RF C.A.F.	2
Pipe Nipple 50 mm	1
Stud Bolt with Nuts	8
Welding Neck Flange	1

* DRAIN POINT Fig. 2J

Run DN 40-40 Br DN 20

	No.
Branch: Table Page 1	1
Ball Valve Red. Bore Flanged	1
Blind Flange	1
Gasket RF C.A.F.	2
Pipe Nipple 50 mm	1
Stud Bolt with Nuts	8
Welding Neck Flange	1

* DRAIN POINT Fig. 2J

Run DN 50-300 Br DN 20

	No.
Branch: Table Page 1	1
Ball Valve Red. Bore Flanged	1
Blind Flange	1
Gasket RF C.A.F.	2
Pipe Nipple 50 mm	1
Stud Bolt with Nuts	8
Welding Neck Flange	1

* VENT POINT Fig. 1J

Run DN 15-25 Br DN 15

	No.
Branch: Table Page 1	1
Blind Flange	1
Gasket RF C.A.F.	2
Globe Valve Flange	1
Pipe Nipple 50 mm	1
Stud Bolt with Nuts	8
Welding Neck Flange	1

VENT POINT Fig. 1J

Run DN 40-40 Br DN 20

	No.
Branch: Table Page 1	1
Blind Flange	1
Gasket RF C.A.F.	2
Globe Valve Flange	1
Pipe Nipple 50 mm	1
Stud Bolt with Nuts	8
Welding Neck Flange	1

* VENT POINT Fig. 1J

Run DN 50-300 Br DN 20

	No.
Branch: Table Page 1	1
Blind Flange	1
Gasket RF C.A.F.	2
Globe Valve Flange	1
Pipe Nipple 50 mm	1
Stud Bolt with Nuts	8
Welding Neck Flange	1

Base Material: Stainless Steel AISI 321/347	First Issue:	Revision:	
Rating: PN 50 (Class 300)		Date:	
Corrosion Allowance: 0 mm		Sign:	

Temperature °C		0	50	75	100	125	150	175	200
urePress Barg.	DN 15-80	49.6	48.1	45.0	42.2	38.0	29.0	20.0	11.0
	DN 100-150	41.2	41.2	41.2	39.0	32.0	24.0	17.0	9.0
	DN 200-300	28.7	28.7	28.7	28.7	23.0	18.0	12.0	7.0

TABLE OF SCHEDULES

DN	Schedule
15	40S
20	40S
25	10S
40	10S
50	10S
80	10S
100	10S
150	10S
200	10S
250	10S
300	10S

BRANCH CONNECTIONS 90 DEGREES

Run Size	BRANCH SIZE 15	20	25	40	50	80	100	150	200	250	300
300	C	C	C	C	E	E	E	E	E	E	A
250	C	C	C	C	E	E	E	E	E	A	
200	C	C	C	C	E	E	E	E	A		
150	C	C	C	C	E	E	E	A			
100	C	C	C	C	E	E	A				
80	C	C	C	C	E	A					
50	C	C	C	B	A						
40	C	B	B	A							
25	B	B	A								
20	B	A									
15	A										

Note:
- Design limits are acc. flange rating ANSI B16 Material Group 2.4 and to ball valve rating acc. BS 5351.
- Blind flanges to be provided with liner.
- For economic reasons use lap-joint flanges from DN 15 up to DN 200.
- Spectacle blinds to be installed between welding neck flanges.
- Application of other types of branch connections is subject to company approval.

CODE	EXPLANATION OF CHARACTERS
A	Equal tee
B	Reducing tee
C	Branch fitting outlet socket weld
E	Branch outlet reducing butt-weld

Class No.: CS05	Page: 2	Content: Material Descriptions

* PIPE

PIPE	Pipe	DN	15-300	ASTM	A312-TP316L
			(Seamless or Welded)		
PNPP	Pipe Nipple 50 mm	DN	15-40	ASTM	A312-TP316L
			(Seamless)		

* FLANGES

BLFL	Blind Flange	DN	15-300	ASTM	A182-F316
FLIN	Blind Flange Liner	DN	15-300	ASTM	A240-TP316
SBFL	Spectacle Blind Flange	DN	15-300	ASTM	A240-TP316
WNFL	Welding Neck Flange	DN	15-300	ASTM	A182-F316

* FITTINGS

CAPB	Cap	Butt-Weld. End	DN	15-300	ASTM	A403-WP316L
E45B	Elbow 45 Deg.	Butt-Weld. End	DN	15-300	ASTM	A403-WP316L
E90B	Elbow 90 Deg.	Butt-Weld. End	DN	15-300	ASTM	A403-WP316L
STUB	End		DN	15-200	ASTM	A403-WP316L
TEEB	Equal Tee	Butt-Weld. End	DN	15-300	ASTM	A403-WP316L
E45S	Elbow 45 Deg.	Socket-Weld. End	DN	15-40	ASTM	A182-F316
E90S	Elbow 90 Deg.	Socket-Weld. End	DN	15-40	ASTM	A182-F316
TEES	Equal Tee	Socket-Weld. End	DN	15-40	ASTM	A182-F316
COUS	Coupling	Socket-Weld. End	DN	15-40	ASTM	A182-F316
CAPS	Cap	Socket-Weld. End	DN	15-40	ASTM	A182-F316

* REDUCING FITTINGS

BROS	Branch Fitting Outlet Socket-Weld. End	DN	15-40	ASTM	A182-F316
BROB	Branch Outlet Red. Butt-Weld.	DN	50-300	ASTM	A182-F316
RECB	Reducer Conc. Butt-Weld. End	DN	20-300	ASTM	A403-WP316L
REEB	Reducer Ecc. Butt-Weld. End	DN	20-300	ASTM	A403-WP316L
TERB	Tee Reducing Butt-Weld. End	DN	20-50	ASTM	A403-WP316L
TERS	Tee Reducing Socket-Weld. End	DN	20-40	ASTM	A182-F316

Note:
- For full material description see relevant buying description.
- Where both socket weld and butt weld fittings are specified, preference is subject to company approval.

* VALVES

BARF	Ball Valve Red. Bore Flanged	DN	15-250	Body:	ASTM	A351-CF8M, A182-F316
				Int:	AISI	316 (L)/ PTFE
GHVF	Check Valve Flanged	DN	15-300	Body:	ASTM	A351-CF8M, A182-F316
				Trim:	AISI	316 (L) + Stellite 6
				Seat:	PTFE, FKM	
GAVF	Gate Valve Flanged	DN	50-300	Body:	ASTM	A351-CF8M, A182-F316
				Trim:	AISI	316 (L) + Stellite 6
GLBF	Globe Valve Flanged	DN	15-200	Body:	ASTM	A351-CF8M, A182-F316
				Trim:	AISI	316 (L) + Stellite 6

* MISCELLANEOUS

GKSW	Gasket, Spiral Wound	DN	15-300	AISI	316, 316L Graphite Filled	
				CS Centring-, SS Inner-Ring.		
ORFS	Orifice Flange Set	DN	50-300		ASTM	A182-F316
STBT	Stud Bolt with Nuts		----	Studs:	ASTM	A193-B7
				Nuts:	ASTM	A194-2H

Class No.: CS05	Page: 3	Content: Piping Components

lass No.: CS05	Page: 4	Content: Reducing Piping Components

ITEM DESCRIPTION			NOMINAL PIPE SIZE 15	20	25	40	50	80	100	150	200	250	300
* PIPE													
Pipe		74.36.60	*	*	*	*	*	*	*	*	*	*	*
* FLANGES													
Blind Flange		76.65.10	*	*	*	*	*	*	*	*	*	*	*
Blind Flange Liner		76.80.81	*	*	*	*	*	*	*	*	*	*	*
Lap-Joint Flange		76.62.00	*	*	*	*	*	*	*	*	*		
Spectacle Blind Flange		76.88.07	*	*	*	*	*	*	*	*	*	*	*
Welding Neck Flange		76.65.80	*	*	*	*	*	*	*	*	*	*	*
* FITTINGS													
Cap	Butt-Weld. End	76.33.18	*	*	*	*	*	*	*	*	*	*	*
Elbow 45 Deg.	Butt-Weld. End	76.33.38	*	*	*	*	*	*	*	*	*	*	*
Elbow 90 Deg.	Butt-Weld. End	76.33.39	*	*	*	*	*	*	*	*	*		
Equal Tee	Butt-Weld. End	76.33.84	*	*	*	*	*	*	*	*	*	*	*
Elbow 45 Deg.	Socket-Weld. End	76.37.38	*	*	*	*							
Elbow 90 Deg.	Socket-Weld. End	76.37.39	*	*	*	*							
Equal Tee	Socket-Weld. End	76.37.84	*	*	*	*							
Coupling	Socket-Weld. End	76.37.28	*	*	*	*							
Cap	Socket-Weld. End	76.37.18	*	*	*	*							
* VALVES													
Ball Valve Red. Bore Flanged		75.72.00	*	*	*	*	*	*	*	*	*	*	
Check Valve Flanged		75.40.13	*	*	*	*	*	*	*	*	*	*	*
Gate Valve Flanged		75.40.33					*	*	*	*	*	*	*
Globe Valve Flanged		75.40.41	*	*	*	*	*	*	*	*	*		
* MISCELLANEOUS													
Gasket, Spiral Wound		85.41.46	*	*	*	*	*	*	*	*	*	*	*
Orifice Flange Set		60.00.00					*	*	*	*	*	*	*

Run	Br.	BROB 76.80.00	RECB 76.33.70	REEB 76.33.71	TERB 76.33.85	TERS 76.37.85
20 ×	15		*	*	*	*
25 ×	15		*	*	*	*
25 ×	20		*	*	*	*
40 ×	20		*	*		*
40 ×	25		*	*	*	*
50 ×	25		*	*		
50 ×	40		*	*	*	
80 ×	40		*	*		
80 ×	50	*	*	*		
100 ×	50	*	*	*		
100 ×	80	*	*	*		
150 ×	50	*				
150 ×	80	*	*	*		
150 ×	100	*	*	*		
200 ×	50	*				
200 ×	80	*				
200 ×	100	*	*	*		
200 ×	150	*	*	*		
250 ×	50	*				
250 ×	80	*				
250 ×	100	*				
250 ×	150	*	*	*		
250 ×	200	*	*	*		
300 ×	50	*				
300 ×	80	*				
300 ×	100	*				
300 ×	150	*	*	*		
300 ×	200	*	*	*		
300 ×	250	*	*	*		

COMP. NAME	DESCRIPTION
BROS	Branch Fitting Outlet Socket Weld. End
BROB	Branch Outlet Red. Butt-Weld
RECB	Reducer Conc. Butt-Weld. End
REEB	Reducer Ecc. Butt-Weld. End
TERB	Tee Reducing Butt-Weld. End
TERS	Tee Reducing Socket-Weld. End

Br.	Run-Pipe	BROS 76.80.26
15	40-150	*
	200-300	*
20	50-80	*
	100-300	*
25	50	*
	80-100	*
	150-300	*
40	80-100	*
	150-300	*

Class No.: CS05	Page: 5	Content: Bolting and Assemblies

BOLT SET FLANGED JOINTS

DN	No.	Inch		mm	81.38.61
15	4	1/2	×	70	*
20	4	5/8	×	75	*
25	4	5/8	×	80	*
40	4	3/4	×	90	*
50	8	5/8	×	90	*
80	8	3/4	×	110	*
100	8	3/4	×	115	*
150	12	3/4	×	125	*
200	12	7/8	×	140	*
250	16	1	×	160	*
300	16	11/8	×	170	*

BOLT SET SPECTACLE/SPACER

DN	No.	Inch		mm	81.38.61
15	4	1/2	×	75	*
20	4	5/8	×	85	*
25	4	5/8	×	90	*
40	4	3/4	×	100	*
50	8	5/8	×	100	*
80	8	3/4	×	120	*
100	8	3/4	×	130	*
150	12	3/4	×	145	*
200	12	7/8	×	170	*
250	16	1	×	190	*
300	16	11/8	×	205	*

BOLT SET FOR ORIFICE FLANGES

DN	No.	Inch		mm	81.38.61
15	4	5/8	×	120	*
20	4	5/8	×	120	*
25	4	5/8	×	120	*
40	4	3/4	×	130	*
50	8	5/8	×	150	*
80	8	3/4	×	150	*
100	12	3/4	×	140	*
150	12	3/4	×	140	*
200	12	7/8	×	150	*
250	16	1	×	170	*
300	16	11/8	×	190	*

* DRAIN POINT Fig. 2I

Run DN 15-25 Br DN 15

	No.
Branch: Table Page 1	1
Ball Valve Red. Bore Flanged	1
Blind Flange	1
Gasket Spiral Wound	2
Stud Bolt with Nuts	8
Welding Neck Flange	1

* DRAIN POINT Fig. 2I

Run DN 40-40 Br DN 20

	No.
Branch: Table Page 1	1
Ball Valve Red. Bore Flanged	1
Blind Flange	1
Gasket Spiral Wound	2
Stud Bolt with Nuts	8
Welding Neck Flange	1

* DRAIN POINT Fig. 2J

Run DN 50-300 Br DN 20

	No.
Branch: Table Page 1	1
Ball Valve Red. Bore Flanged	1
Blind Flange	1
Gasket Spiral Wound	2
Pipe Nipple 50 mm	1
Stud Bolt with Nuts	8
Welding Neck Flange	1

* VENT POINT Fig. 1I

Run DN 15-25 Br DN 15

	No.
Branch: Table Page 1	1
Blind Flange	1
Gasket Spiral Wound	2
Globe Valve Flange Bellows Seal	1
Stud Bolt with Nuts	8
Welding Neck Flange	1

* VENT POINT Fig. 1I

Run DN 40-40 Br DN 20

	No.
Branch: Table Page 1	1
Blind Flange	1
Gasket Spiral Wound	2
Globe Valve Flange Bellows Seal	1
Stud Bolt with Nuts	8
Welding Neck Flange	1

* VENT POINT Fig. 1I

Run DN 50-300 Br DN 20

	No.
Branch: Table Page 1	1
Blind Flange	1
Gasket Spiral Wound	2
Globe Valve Flange Bellows Seal	1
Pipe Nipple 50 mm	1
Stud Bolt with Nuts	8
Welding Neck Flange	1

Class No.: CS06	Page: 1	Content: General
Base Material: Stainless Steel AISI 321/347	First Issue: Revision:	
Rating: PN 50 (Class 300)	Date:	
Corrosion Allowance: 0 mm	Sign:	

Temperature °C		0	50	100	150	200	250	300	350	400	450
urePress Barg.	DN 15-250	49.6	47.9	41.5	37.5	34.4	32.1	30.4	29.4	28.6	28.4
	DN 300-	47.9	47.9	41.5	37.5	34.4	32.1	30.4	29.4	28.6	28.4

TABLE OF SCHEDULES

DN	Schedule
15	40S
20	40S
25	10S
40	10S
50	10S
80	10S
100	10S
150	10S
200	20
250	20
300	20

BRANCH CONNECTIONS 90 DEGREES

Run Size	BRANCH SIZE 15	20	25	40	50	80	100	150	200	250	300
300	C	C	C	C	E	E	E	E	E	E	A
250	C	C	C	C	E	E	E	E	E	A	
200	C	C	C	C	E	E	E	E	A		
150	C	C	C	C	D	D	D	A			
100	C	C	C	C	D	D	A				
80	C	C	C	C	D	A					
50	C	C	C	B	A						
40	C	B	B	A							
25	B	B	A								
20	B	A									
15	A										

Note:
- Design limits are acc. flange rating ANSI B16.5 Material Group 2.4 and to allowable internal pressure acc. ANSI B 31.3.
- Application of other types of branch connections is subject to company approval.

CODE	EXPLANATION OF CHARACTERS
A	Equal tee
B	Reducing tee
C	Branch fitting outlet socket weld
D	Pipe to pipe
E	Branch outlet reducing butt-weld

Class No.: CS06	Page: 2	Content: Material Descriptions

* PIPE						
PIPE	Pipe		DN	15-300	ASTM	A312-TP321/347
				(Seamless or Welded)		
PNPP	Pipe Nipple 50 mm		DN	15-40	ASTM	A312-TP321/347
				(Seamless)		
* FLANGES						
BLFL	Blind Flange		DN	15-300	ASTM	A182-F321/347
SBFL	Spectacle Blind Flange		DN	15-300	ASTM	A240-TP321/347
SPRT	Spacer Ring Type (ANS Flanges)		DN	15-300	ASTM	A240-TP321/347
WNFL	Welding Neck Flange		DN	15-300	ASTM	A182-F321/347
* FITTINGS						
CAPB	Cap	Butt-Weld. End	DN	15-300	ASTM	A403-WP321/347
E45B	Elbow 45 Deg.	Butt-Weld. End	DN	15-300	ASTM	A403-WP321/347
E90B	Elbow 90 Deg.	Butt-Weld. End	DN	15-300	ASTM	A403-WP321/347
TEEB	Equal Tee	Butt-Weld. End	DN	15-300	ASTM	A403-WP321/347
E45S	Elbow 45 Deg.	Socket-Weld. End	DN	15-40	ASTM	A182-F321/347
E90S	Elbow 90 Deg.	Socket-Weld. End	DN	15-40	ASTM	A182-F321/347
TEES	Equal Tee	Socket-Weld. End	DN	15-40	ASTM	A182-F321/347
COUS	Coupling	Socket-Weld. End	DN	15-40	ASTM	A182-F321/347
CAPS	Cap	Socket-Weld. End	DN	15-40	ASTM	A182-F321/347
* REDUCING FITTINGS						
BROS	Branch Fitting Outlet Socket-Weld. End		DN	15-40	ASTM	A182-F321/347
BROB	Branch Outlet Red. Butt-Weld.		DN	50-300	ASTM	A182-F321/347
RECB	Reducer Conc. Butt-Weld. End		DN	20-300	ASTM	A403-WP321/347
REEB	Reducer Ecc. Butt-Weld. End		DN	20-300	ASTM	A403-WP321/347
TERB	Tee Reducing Butt-Weld. End		DN	20-50	ASTM	A403-WP321/347
TERS	Tee Reducing Socket-Weld. End		DN	20-40	ASTM	A182-F321/347

Note:
- For full material description see relevant buying description.
- Where both socket weld and butt weld fittings are specified, preference is subject to company approval.

* VALVES						
GHVF	Check Valve Flanged	DN	15-300	Body:	ASTM	A351-CF8C, A182-F321
				Trim:	AISI	321
GAVF	Gate Valve Flanged	DN	15-300	Body:	ASTM	A351-CF8C, A182-F321
				Trim:	AISI	321
GLVF	Globe Valve Flanged	DN	15-200	Body:	ASTM	A351-CF8C, A182-F321
				Trim:	AISI	321
* MISCELLANEOUS						
GKSW	Gasket, Spiral Wound	DN	15-300	AISI 304, Graphite Filled		
				CS Centring-, AISI 403 Iner-R		
ORFS	Orifice Flange Set	DN	50-300	ASTM A182-F321/347		
STBT	Stud Bolt with Nuts		----	ASTM A453-GR. 660, CL.A.		

Class No.: CS06	Page: 3	Content: Piping Components

ITEM DESCRIPTION			NOMINAL PIPE SIZE 15	20	25	40	50	80	100	150	200	250	300
* PIPE													
Pipe		74.36.60	*	*	*	*	*	*	*	*	*	*	*
* FLANGES													
Blind Flange		76.65.10	*	*	*	*	*	*	*	*	*	*	*
Spectacle Blind Flange		76.88.07	*	*	*	*	*	*	*	*	*	*	*
Spacer Ring Type (ANS Flanges)		76.88.00	*	*	*	*	*	*	*	*	*	*	*
Welding Neck Flange		76.65.80	*	*	*	*	*	*	*	*	*	*	*
* FITTINGS													
Cap	Butt-Weld. End	76.33.18	*	*	*	*	*	*	*	*	*	*	*
Elbow 45 Deg.	Butt-Weld. End	76.33.38	*	*	*	*	*	*	*	*	*	*	*
Elbow 90 Deg.	Butt-Weld. End	76.33.39	*	*	*	*	*	*	*	*	*	*	*
Equal Tee	Butt-Weld. End	76.33.84	*	*	*	*	*	*	*	*	*	*	*
Elbow 45 Deg.	Socket-Weld. End	76.37.38	*	*	*	*							
Elbow 90 Deg.	Socket-Weld. End	76.37.39	*	*	*	*							
Equal Tee	Socket-Weld. End	76.37.84	*	*	*	*							
Coupling	Socket-Weld. End	76.37.28	*	*	*	*							
Cap	Socket-Weld. End	76.37.18	*	*	*	*							
* VALVES													
Check Valve Flanged		75.40.13	*	*	*	*	*	*	*	*	*	*	*
Gate Valve Flanged		75.40.33	*	*	*	*	*	*	*	*	*	*	*
Globe Valve Flanged		75.40.41	*	*	*	*	*	*	*	*	*		
* MISCELLANEOUS													
Gasket, Spiral Wound		85.41.43	*	*	*	*	*	*	*	*	*	*	*
Orifice Flange Set		60.00.00					*	*	*	*	*	*	*

Class No.: CS06	Page: 4	Content: Reducing Piping Components

Run		Br.	BROB 76.80.00	RECB 76.33.70	REEB 76.33.71	TERB 76.33.85	TERS 76.37.85
20	×	15		*	*	*	*
25	×	15		*	*	*	*
25	×	20		*	*	*	*
40	×	15				*	*
40	×	20		*	*	*	*
40	×	25		*	*	*	*
50	×	25		*	*		
50	×	40		*	*	*	
80	×	40		*	*		
80	×	50	*	*	*		
100	×	50	*	*	*		
100	×	80	*	*	*		
150	×	50	*				
150	×	80	*	*	*		
150	×	100	*	*	*		
200	×	50	*				
200	×	80	*				
200	×	100	*				
200	×	150	*	*			
250	×	50	*				
250	×	80	*				
250	×	100	*				
250	×	150	*	*			
250	×	200	*	*	*		
300	×	50	*				
300	×	80	*				
300	×	100	*				
300	×	150	*				
300	×	200	*	*	*		
300	×	250	*	*	*		

COMP. NAME	DESCRIPTION
BROS	Branch Fitting Outlet Socket Weld. End
BROB	Branch Outlet Red. Butt-Weld
RECB	Reducer Conc. Butt-Weld. End
REEB	Reducer Ecc. Butt-Weld. End
TERB	Tee Reducing Butt-Weld. End
TERS	Tee Reducing Socket-Weld. End

Br.	Run-Pipe	BROS 76.80.26
15	40-150	*
	200-300	*
20	50-80	*
	100-300	*
25	50	*
	80-100	*
	150-300	*
40	80-100	*
	150-300	*

BOLT SET FLANGED JOINTS

DN	No.	Inch		mm	81.38.00
15	4	1/2	×	70	*
20	4	5/8	×	75	*
25	4	5/8	×	80	*
40	4	3/4	×	90	*
50	8	5/8	×	90	*
80	8	3/4	×	110	*
100	8	3/4	×	115	*
150	12	3/4	×	125	*
200	12	7/8	×	140	*
250	16	1	×	160	*
300	16	11/8	×	170	*

BOLT SET SPECTACLE/SPACER

DN	No.	Inch		mm	81.38.00
15	4	1/2	×	75	*
20	4	5/8	×	85	*
25	4	5/8	×	90	*
40	4	3/4	×	100	*
50	8	5/8	×	100	*
80	8	3/4	×	120	*
100	8	3/4	×	130	*
150	12	3/4	×	145	*
200	12	7/8	×	170	*
250	16	1	×	190	*
300	16	11/8	×	205	*

BOLT SET FOR ORIFICE FLANGES

DN	No.	Inch		mm	81.38.00
15	4	5/8	×	120	*
20	4	5/8	×	120	*
25	4	5/8	×	120	*
40	4	3/4	×	130	*
50	8	5/8	×	150	*
80	8	3/4	×	150	*
100	12	3/4	×	140	*
150	12	3/4	×	140	*
200	12	7/8	×	150	*
250	16	1	×	170	*
300	16	11/8	×	190	*

* DRAIN POINT	Fig. 0I		
Run	DN 15-25	Br	DN 15
			No.
Branch: Table Page 1			1
Blind Flange			1
Gasket RF C.A.F.			2
Gate Valve Flanged			1
Stud Bolt with Nuts			8
Welding Neck Flange			1

* DRAIN POINT	Fig. 0I		
Run	DN 40-40	Br	DN 20
			No.
Branch: Table Page 1			1
Blind Flange			1
Gasket RF C.A.F.			2
Gate Valve Flanged			1
Stud Bolt with Nuts			8
Welding Neck Flange			1

* DRAIN POINT	Fig. 0J		
Run	DN 50-300	Br	DN 20
			No.
Branch: Table Page 1			1
Blind Flange			1
Gasket RF C.A.F.			2
Gate Valve Flanged			1
Pipe Nipple 50 mm			1
Stud Bolt with Nuts			8
Welding Neck Flange			1

* VENT POINT	Fig. 1I		
Run	DN 15-25	Br	DN 15
			No.
Branch: Table Page 1			1
Blind Flange			1
Gasket RF C.A.F.			2
Globe Valve Flange			1
Stud Bolt with Nuts			8
Welding Neck Flange			1

* VENT POINT	Fig. 1I		
Run	DN 40-40	Br	DN 20
			No.
Branch: Table Page 1			1
Blind Flange			1
Gasket Spiral Wound			2
Globe Valve Flange Bellows Seal			1
Stud Bolt with Nuts			8
Welding Neck Flange			1

* VENT POINT	Fig. 1I		
Run	DN 50-300	Br	DN 20
			No.
Branch: Table Page 1			1
Blind Flange			1
Gasket Spiral Wound			2
Globe Valve Flange Bellows Seal			1
Pipe Nipple 50 mm			1
Stud Bolt with Nuts			8
Welding Neck Flange			1

Class No.: CS07	Page: 1	Content: General
Base Material: Stainless Steel AISI 321, Stab. HT	First Issue: Revision:	
Rating: PN 50 (Class 300)	Date:	
Corrosion Allowance: 0 mm	Sign:	

Temperature °C		0	50	100	150	200	300	400	450	500	538
urePress Barg.	DN 15-250	49.6	47.9	41.5	37.5	34.4	30.4	28.6	28.3	27.0	24.4
	DN 300-	47.9	47.9	41.5	37.5	34.4	30.4	28.6	28.3	27.0	24.4

TABLE OF SCHEDULES

DN	Schedule
15	40S
20	40S
25	40S
40	40S
50	40S
80	40S
100	40S
150	40S
200	20
250	20
300	20

BRANCH CONNECTIONS 90 DEGREES

BRANCH SIZE

Run Size	15	20	25	40	50	80	100	150	200	250	300
300	C	C	C	C	E	E	E	B	B	B	A
250	C	C	C	C	E	E	E	B	B	A	
200	C	C	C	C	E	E	B	B	A		
150	C	C	C	C	E	B	B	A			
100	C	C	C	C	B	B	A				
80	C	C	C	B	B	A					
50	C	C	C	B	A						
40	C	B	B	A							
25	B	B	A								
20	B	A									
15	A										

Note:
- Design limits are acc. flange rating ANSI B16.5 Material Group 2.4 and to allowable internal pressure acc. ANSI B 31.3.
- Cold bending of pipe is not allowed and hot bending is not recommended.
- Application of other types of branch connections is subject to company approval.

CODE	EXPLANATION OF CHARACTERS
A	Equal tee
B	Reducing tee
C	Branch fitting outlet socket weld
E	Branch outlet reducing butt-weld

Class No.: CS07	Page: 2	Content: Material Descriptions

* PIPE

PIPE	Pipe	DN	15-300	ASTM	A312-TP321 STAB. HT. (Seamless or Welded)
PNPP	Pipe Nipple 50 mm	DN	15-40	ASTM	A312-TP321 STAB. HT. (Seamless)

* FLANGES

BLFL	Blind Flange	DN	15-300	ASTM	A182-F321 STAB. HT.
SBFL	Spectacle Blind Flange	DN	15-300	ASTM	A240-TP321 STAB. HT.
SPRT	Spacer Ring Type (ANS Flanges)	DN	15-300	ASTM	A240-TP321 STAB. HT.
WNFL	Welding Neck Flange-Smooth Finish	DN	15-300	ASTM	A182-F321 STAB. HT.

* FITTINGS

CAPB	Cap	Butt-Weld. End	DN	15-300	ASTM	A403-WP-S-321 STAB. HT.
E45B	Elbow 45 Deg.	Butt-Weld. End	DN	15-300	ASTM	A403-WP-S-321 STAB. HT.
E90B	Elbow 90 Deg.	Butt-Weld. End	DN	15-300	ASTM	A403-WP-S-321 STAB. HT.
TEEB	Equal Tee	Butt-Weld. End	DN	15-300	ASTM	A403-WP-S-321 STAB. HT.
E45S	Elbow 45 Deg.	Socket-WeldEnd	DN	15-40	ASTM	A182-F321 STAB. HT.
E90S	Elbow 90 Deg.	Socket-Weld.End	DN	15-40	ASTM	A182-F321 STAB. HT.
TEES	Equal Tee	Socket-Weld. End	DN	15-40	ASTM	A182-F321 STAB. HT.
COUS	Coupling	Socket-Weld. End	DN	15-40	ASTM	A182-F321 STAB. HT.
CAPS	Cap	Socket-Weld. End	DN	15-40	ASTM	A182-F321 STAB. HT.

* REDUCING FITTINGS

BROS	Branch Fitting Outlet Socket-Weld. End	DN	15-40	ASTM	A182-F321 STAB. HT.
BROB	Branch Outlet Red. Butt-Weld.	DN	50-300	ASTM	A182-F321 STAB. HT.
RECB	Reducer Conc. Butt-Weld. End	DN	20-300	ASTM	A403-WP-S-321 STAB. HT.
REEB	Reducer Ecc. Butt-Weld. End	DN	20-300	ASTM	A403-WP-S-321 STAB. HT.
TERB	Tee Reducing Butt-Weld. End	DN	20-300	ASTM	A403-WP-S-321 STAB. HT.
TERS	Tee Reducing Socket-Weld. End	DN	20-40	ASTM	A182-F321 STAB. HT.

Note:
- For full material description see relevant buying description.
- Where both socket weld and butt weld fittings are specified, preference is subject to company approval.

* VALVES

GHVF	Check Valve Flanged DN	15-300	Body:	ASTM	A351-CF8C, A182-F321
			Trim:	AISI	321 + Stellite 6
GAVF	Gate Valve Flanged DN	15-300	Body:	ASTM	A351-CF8C, A182-F321
			Trim:	AISI	321 + Stellite 6
GLVF	Globe Valve Flanged DN	15-200	Body:	ASTM	A351-CF8C, A182-F321
			Trim:	AISI	321 + Stellite 6

* MISCELLANEOUS

GKTI	Gasket, Spiral Wound	DN	15-300	AISI 316L Graphite Filled
ORFS	Orifice Flange Set	DN	50-300	ASTM A182-F321 STAB. HT.
STBT	Stud Bolt with Nuts		---	ASTM A453-GR. 660, CL.A.

Class No.: CS07	Page: 3	Content: Piping Components

ITEM DESCRIPTION			NOMINAL PIPE SIZE 15	20	25	40	50	80	100	150	200	250	300
* PIPE													
Pipe		74.36.00	*	*	*	*	*	*	*	*	*	*	*
* FLANGES													
Blind Flange		76.65.00	*	*	*	*	*	*	*	*	*	*	*
Spectacle Blind Flange		76.88.07	*	*	*	*	*	*	*	*	*	*	*
Spacer Ring Type (ANS Flanges)		76.88.00	*	*	*	*	*	*	*	*	*	*	*
Welding Neck Flange - Smooth Finish		76.65.00	*	*	*	*	*	*	*	*	*	*	*
* FITTINGS													
Cap	Butt-Weld. End	76.33.21	*	*	*	*	*	*	*	*	*	*	*
Elbow 45 Deg.	Butt-Weld. End	76.33.37	*	*	*	*	*	*	*	*	*	*	*
Elbow 90 Deg.	Butt-Weld. End	76.33.39	*	*	*	*	*	*	*	*	*	*	*
Equal Tee	Butt-Weld. End	76.33.83	*	*	*	*	*	*	*	*	*	*	*
Elbow 45 Deg.	Socket-Weld. End	76.37.38	*	*	*	*							
Elbow 90 Deg.	Socket-Weld. End	76.37.39	*	*	*	*							
Equal Tee	Socket-Weld. End	76.37.84	*	*	*	*							
Coupling	Socket-Weld. End	76.37.28	*	*	*	*							
Cap	Socket-Weld. End	76.37.18	*	*	*	*							
* VALVES													
Check Valve Flanged		75.40.13	*	*	*	*	*	*	*	*	*	*	*
Gate Valve Flanged		75.40.33					*	*	*	*	*	*	*
Globe Valve Flanged		75.40.41	*	*	*	*	*	*	*	*	*		
* MISCELLANEOUS													
Gasket, RF. C.A.F.		85.31.15/17	*	*	*	*	*	*	*	*	*	*	*
Orifice Flange Set		60.00.00					*	*	*	*	*	*	*

Class No.: CS07	Page: 4	Content: Reducing Piping Components

Run	Br.	BROB 76.80.00	RECB 76.33.70	REEB 76.33.71	TERB 76.33.85	TERS 76.37.85
20 ×	15		*	*	*	*
25 ×	15		*	*	*	*
25 ×	20		*	*	*	*
40 ×	15				*	*
40 ×	20		*	*	*	*
40 ×	25		*	*	*	*
50 ×	25		*	*		
50 ×	40		*	*	*	
80 ×	40		*	*		
80 ×	50	*	*	*	*	
100 ×	50	*	*	*	*	
100 ×	80	*	*	*	*	
150 ×	50	*				
150 ×	80	*	*	*	*	
150 ×	100	*	*	*	*	
200 ×	50	*				
200 ×	80	*				
200 ×	100	*	*	*	*	
200 ×	150	*	*	*	*	
250 ×	50	*				
250 ×	80	*				
250 ×	100	*			*	
250 ×	150	*	*	*	*	
250 ×	200	*	*	*	*	
300 ×	50	*				
300 ×	80	*				
300 ×	100	*				
300 ×	150	*	*	*	*	
300 ×	200	*	*	*	*	
300 ×	250	*	*	*	*	

COMP. NAME	DESCRIPTION
BROS	Branch Fitting Outlet Socket Weld. End
BROB	Branch Outlet Red. Butt-Weld
RECB	Reducer Conc. Butt-Weld. End
REEB	Reducer Ecc. Butt-Weld. End
TERB	Tee Reducing Butt-Weld. End
TERS	Tee Reducing Socket-Weld. End

Br.	Run-Pipe	BROS 76.80.26
15	40-150	*
	200-300	*
20	50-80	*
	100-300	*
25	50	*
	80-100	*
	150-300	*
40	80-100	*
	150-300	*

Class No.: CS07	Page: 5	Content: Bolting and Assemblies

BOLT SET FLANGED JOINTS

DN	No.	Inch		mm	81.38.00
15	4	1/2	×	70	*
20	4	5/8	×	75	*
25	4	5/8	×	80	*
40	4	3/4	×	90	*
50	8	5/8	×	90	*
80	8	3/4	×	110	*
100	8	3/4	×	115	*
150	12	3/4	×	125	*
200	12	7/8	×	140	*
250	16	1	×	160	*
300	16	11/8	×	170	*

BOLT SET SPECTACLE/SPACER

DN	No.	Inch		mm	81.38.00
15	4	1/2	×	75	*
20	4	5/8	×	85	*
25	4	5/8	×	90	*
40	4	3/4	×	100	*
50	8	5/8	×	100	*
80	8	3/4	×	120	*
100	8	3/4	×	130	*
150	12	3/4	×	145	*
200	12	7/8	×	170	*
250	16	1	×	190	*
300	16	11/8	×	205	*

BOLT SET FOR ORIFICE FLANGES

DN	No.	Inch		mm	81.38.00
15	4	5/8	×	120	*
20	4	5/8	×	120	*
25	4	5/8	×	120	*
40	4	3/4	×	130	*
50	8	5/8	×	150	*
80	8	3/4	×	150	*
100	12	3/4	×	140	*
150	12	3/4	×	140	*
200	12	7/8	×	150	*
250	16	1	×	170	*
300	16	11/8	×	190	*

* DRAIN POINT	Fig. 0I		
Run	DN 15-25	Br	DN 15
			No.
Branch: Table Page 1			1
Blind Flange			1
Gasket Spiral Wound			2
Gate Valve Flanged			1
Stud Bolt with Nuts			8
Welding Neck Flange			1

* DRAIN POINT	Fig. 0I		
Run	DN 40-40	Br	DN 20
			No.
Branch: Table Page 1			1
Blind Flange			1
Gasket Spiral Wound			2
Gate Valve Flanged			1
Stud Bolt with Nuts			8
Welding Neck Flange			1

* DRAIN POINT	Fig. 0J		
Run	DN 50-300	Br	DN 20
			No.
Branch: Table Page 1			1
Blind Flange			1
Gasket Spiral Wound			2
Gate Valve Flanged			1
Pipe Nipple 50 mm			1
Stud Bolt with Nuts			8
Welding Neck Flange			1

* VENT POINT	Fig. 1I		
Run	DN 15-25	Br	DN 15
			No.
Branch: Table Page 1			1
Blind Flange			1
Gasket Spiral Wound			2
Globe Valve Flange			1
Stud Bolt with Nuts			8
Welding Neck Flange			1

* VENT POINT	Fig. 1I		
Run	DN 40-40	Br	DN 20
			No.
Branch: Table Page 1			1
Blind Flange			1
Gasket Spiral Wound			2
Globe Valve Flange			1
Stud Bolt with Nuts			8
Welding Neck Flange			1

* VENT POINT	Fig. 1J		
Run	DN 50-300	Br	DN 20
			No.
Branch: Table Page 1			1
Blind Flange			1
Gasket Spiral Wound			2
Globe Valve Flange			1
Pipe Nipple 50 mm			1
Stud Bolt with Nuts			8
Welding Neck Flange			1

PART THREE

0. INTRODUCTION

This Standards is prepared in three parts, which are separately bindered as follow:

Part I	General (guidance on the application of piping classes).
Part II	Piping class rating: PN 20 (150) and PN 50 (300).
Part III	Piping class rating: PN 100 (600), PN 150 (900), PN 250 (1500) and PN 420 (2500).

Class No.: FN01	Page: 1	Content: General
Base Material: Carbon Steel	First Issue: Revision:	
Rating: PN 100 (Class 600)	Date:	
Corrosion Allowance: 1 mm	Sign:	

Temperature °C		0	50	100	150	200	250	300	350	400
Pressure Barg.	DN 15-600	102.0	100.1	92.8	90.6	87.8	83.6	77.5	74.0	69.1

TABLE OF SCHEDULES

DN		Schedule	
15		80	
20		80	
25		80	
40		80	
50		80	
80		80	
100		80	
150		80	
200		80	
250		80	
300		80	
350		80	
400		80	
450		80	
500		80	
600		80	

BRANCH CONNECTIONS 90 DEGREES
BRANCH SIZE

Run Size	15	20	25	40	50	80	100	150	200	250	300	350	400	450	500	600
600	C	C	C	C	E	E	E	E	E	E	E	E	E	E	E	A
500	C	C	C	C	E	E	E	E	E	E	E	E	E	E	A	
450	C	C	C	C	E	E	E	E	E	E	E	E	E	A		
400	C	C	C	C	E	E	E	E	E	E	E	E	A			
350	C	C	C	C	E	E	E	E	E	E	E	A				
300	C	C	C	C	E	E	E	E	E	E	A					
250	C	C	C	C	E	E	E	E	E	A						
200	C	C	C	C	E	E	E	E	A							
150	C	C	C	C	E	E	E	A								
100	C	C	C	C	E	E	A									
80	C	C	C	C	E	A										
50	C	C	C	B	A											
40	C	B	B	A												
25	B	B	A													
20	B	A														
15	A															

Notes:
- Design limits are acc. flange rating ANSI B16.5 Material Group 1.1.
- Piston type check valves for horizontal mounting only.
- Application of other types of branch connections is subject to company approval.

CODE	EXPLANATION OF CHARACTERS
A	Equal tee
B	Reducing tee
C	Branch fitting outlet socket weld-end
E	Branch outlet reducing butt-weld

Class No.: FN01	Page: 2	Content: Material Descriptions

* PIPE					
PIPE	Pipe		DN 15-600	API	5L-B (Seamless)
PNPP	pipe Nipple 50 mm		DN 15-40	ASTM	A-106-B
* FLANGES					
BLFL	Blind Flange		DN 15-600	ASTM	A105
SBFL	Spectacle Blind Flange		DN 15-600	ASTM	A516-60
SPRT	Spacer Ring Type (ANS Flanges)		DN 15-600	ASTM	A516-60
WNFL	Welding Neck Flange		DN 15-600	ASTM	A105
* FITTINGS					
CAPB	Cap	Butt-Weld. End	DN15-600	ASTM	A234-WPB
E45B	Elbow 45 Deg.	Butt-Weld. End	DN 15-600	ASTM	A234-WPB
E90B	Elbow 90 Deg.	Butt-Weld. End	DN 15-600	ASTM	A234-WPB
TEEB	Equal Tee	Butt-Weld. End	DN 15-600	ASTM	A234-WPB
E45S	Elbow 45 Deg.	Socket-Weld. End	DN 15-40	ASTM	A105
E90S	Elbow 90 Deg.	Socket-Weld. End	DN 15-40	ASTM	A105
TEES	Equal Tee	Socket-Weld. End	DN 15-40	ASTM	A105
COUS	Coupling	Socket-Weld. End	DN15-40	ASTM	A105
CAPS	Cap	Socket-Weld. End	DN15-40	ASTM	A105
* REDUCING FITTINGS					
BROS	Branch Outlet Socket-Weld. End		DN15-40	ASTM	A105
BROB	Branch Outlet Red. Butt-Weld.		DN80-600	ASTM	A105
RECB	Reducer Conc. Butt-Weld. End		DN20-600	ASTM	A234-WPB
REEB	Reducer Ecc. Butt-Weld. End		DN20-600	ASTM	A234-WPB
TERB	Tee Reducing Butt-Weld. End		DN20-600	ASTM	A234-WPB
TERS	Tee Reducing Socket-Weld. End		DN20-40	ASTM	A105

Note:
- For full material description see relevant buying description.
- Where both socket weld and butt weld fittings are specified, preference is subject to company approval.

* VALVES						
CHVF	Check Valve Flanged	DN	15-600	Body:	ASTM	A216-WCB/WCC, A105
				Trim:	AISI	410
CHVS	Check Valve Socke	DN	15-40	Body:	ASTM	A216-WCB/WCC, A105
				Trim:	AISI	410
GAVF	Gate Valve Flanged	DN	15-600	Body:	ASTM	A216-WCB/WCC, A105
				Trim:	AISI	410
GAVS	Gate Valve Socket-Weld	DN	15-40	Body:	ASTM	A216-WCB/WCC, A105
				Trim:	AISI	410
GLVF	Globe Valve Flanged	DN	15-150	Body:	ASTM	A216-WCB/WCC, A105
				Trim:	AISI	410
GLVS	Globe Valve Socket	DN	15-40	Body:	ASTM	A216-WCB/WCC, A105
				Trim:	AISI	410
NEVS	Globe Valve Needle Type Socket	DN	15-40	Body:	ASTM	A216-WCB/WCC, A105
				Trim:	AISI	410
* MISCELLANEOUS						
GKSW	Gasket, Spiral Wound	DN	15-600	AISI 316, Asbestos Filled, CS Centring Ring		
ORFS	Orifice Flange Set	DN	50-600		ASTM	A-105
STBT	Stud Bolt with Nuts		_____	Studs:	ASTM	A193-B7
				Nuts:	ASTM	A194-2H

Class No.: FN01	Page: 3	Content: Piping Components

ITEM DESCRIPTION			NOMINAL PIPE SIZE 15	20	25	40	50	80	100	150	200	250	300	350	400	450	500	600
* PIPE																		
Pipe		74.13.21	*	*	*	*	*	*	*	*	*	*	*	*	*	*	*	*
Pipe Nipple 50 mm		76.30.57	*	*	*	*												
* FLANGES																		
Blind Flange		76.62.10	*	*	*	*	*	*	*	*	*	*	*	*	*	*	*	*
Spectacle Blind Flange		76.88.06	*	*	*	*	*	*	*	*	*	*	*	*	*	*	*	*
Spacer Ring Type (ANS Flanges)		76.88.00	*	*	*	*	*	*	*	*	*	*	*	*	*	*	*	*
Welding Neck Flange		76.62.79	*	*	*	*	*	*	*	*	*	*	*	*	*	*	*	*
* FITTINGS																		
Cap	Butt-Weld. End	76.30.18	*	*	*	*	*	*	*	*	*	*	*	*	*	*	*	*
Elbow 45 Deg.	Butt-Weld. End	76.30.38	*	*	*	*	*	*	*	*	*	*	*	*	*	*	*	*
Elbow 90 Deg.	Butt-Weld. End	76.30.40	*	*	*	*	*	*	*	*	*	*	*	*	*	*	*	*
Equal Tee	Butt-Weld. End	76.30.84	*	*	*	*	*	*	*	*	*	*	*	*	*	*	*	*
Elbow 45 Deg.	Socket-Weld. End	76.34.38	*	*	*													
Elbow 90 Deg.	Socket-Weld. End	76.34.39	*	*	*													
Equal Tee	Socket-Weld. End	76.34.84	*	*	*													
Coupling	Socket-Weld. End	76.34.28	*	*	*													
Cap	Socket-Weld. End	76.34.18	*	*	*													
* VALVES																		
Check Valve Flanged		75.37.15	*	*	*	*	*	*	*	*	*	*	*	*	*	*	*	*
Check Valve Socket		75.56.13	*	*	*	*												
Gate Valve Flanged		75.37.35	*	*	*	*	*	*	*	*	*	*	*	*	*	*	*	*
Gate Valve Sw		75.56.35	*	*	*	*												
Globe Valve Flanged		75.37.45	*	*	*	*	*	*	*									
Globe Valve Socket		75.56.45	*	*	*	*												
Globe Valve Needle Type Socket		75.56.63	*	*	*	*												
* MISCELLANEOUS																		
Gasket, Spiral Wound		85.41.35	*	*	*	*	*	*	*	*	*	*	*	*	*	*	*	*
Orifice Flange Set		60.88.52							*	*	*	*	*	*	*	*	*	*

Run		Br.	BROB 76.80.05	RECB 76.30.72	REEB 76.30.73	TERB 76.30.85	TERS 76.34.85
20	×	15		*	*	*	*
25	×	15		*	*	*	*
25	×	20		*	*	*	*
40	×	15				*	*
40	×	20		*	*	*	*
40	×	25		*	*	*	*
50	×	20				*	
50	×	25		*	*	*	
50	×	40		*	*	*	
80	×	40		*	*	*	
80	×	50	*	*	*	*	
100	×	50	*	*	*	*	
100	×	80	*	*	*	*	
150	×	50	*				
150	×	80	*	*	*	*	
150	×	100	*	*	*	*	
200	×	50	*				
200	×	80	*				
200	×	100	*	*	*	*	
200	×	150	*	*	*	*	
250	×	50	*				
250	×	80	*				
250	×	100	*			*	
250	×	150	*	*	*	*	
250	×	200	*	*	*	*	
300	×	50	*				
300	×	80	*				
300	×	100	*				
300	×	150	*	*	*	*	
300	×	200	*	*	*	*	
300	×	250	*	*	*	*	
350	×	50	*				
350	×	80	*				
350	×	100	*				
350	×	150	*			*	
350	×	200	*	*	*	*	
350	×	250	*	*	*	*	
350	×	300	*	*	*	*	

Run		Br.	BROB 76.80.05	RECB 76.30.72	REEB 76.30.73	TERB 76.30.85
400	×	50	*			
400	×	80	*			
400	×	100	*			
400	×	150	*			*
400	×	200	*	*	*	*
400	×	250	*	*	*	*
400	×	300	*	*	*	*
400	×	350	*	*	*	*
450	×	50	*			
450	×	80	*			
450	×	100	*			
450	×	150	*			
450	×	200	*	*	*	*
450	×	250	*	*	*	*
450	×	300	*	*	*	*
450	×	350	*	*	*	*
450	×	400	*	*	*	*
500	×	50	*			
500	×	80	*			
500	×	100	*			
500	×	150	*			
500	×	200	*	*	*	*
500	×	250	*	*	*	*
500	×	300	*	*	*	*
500	×	350	*	*	*	*
500	×	400	*	*	*	*
500	×	450	*	*	*	*
600	×	50	*			
600	×	80	*			
600	×	100	*			
600	×	150	*			
600	×	200	*	*	*	*
600	×	250	*	*	*	*
600	×	300	*	*	*	*
600	×	350	*	*	*	*
600	×	400	*	*	*	*
600	×	450	*	*	*	*
600	×	500	*	*	*	*

COMP. NAME	DESCRIPTION
BROS	Branch Fitting Socket-Weld. Outlet
BROB	Branch Outlet Red. Butt-Weld
RECB	Reducer Conc. Butt-Weld. End
REEB	Reducer Ecc. Butt-Weld. End
TERB	Tee Reducing Butt-Weld. End
TERS	Tee Reducing Socket-Weld. End

RUN	Br.	BROS 76.80.26
40-150	15	*
200-600		*
50-80	20	*
100-600		*
50	25	*
80-100		*
150-600		*
80-100	40	*
150-300		*
350-600		*

BOLT SET FLANGED JOINTS

DN	No.	Inch		mm	81.38.61
15	4	1/2	×	80	*
20	4	5/8	×	90	*
25	4	5/8	×	90	*
40	4	3/4	×	110	*
50	8	5/8	×	110	*
80	8	5/8	×	130	*
100	8	7/8	×	150	*
150	12	1	×	170	*
200	12	11/8	×	190	*
250	16	11/4	×	220	*
300	20	11/4	×	220	*
350	20	13/8	×	240	*
400	20	11/2	×	250	*
450	20	1-5/8	×	280	*
500	24	1-5/8	×	290	*
600	24	1-7/8	×	330	*

BOLT SET SPECTACLE/SPACER

DN	No.	Inch		mm	81.38.61
15	4	1/2	×	90	*
20	4	5/8	×	100	*
25	4	5/8	×	100	*
40	4	3/4	×	120	*
50	8	5/8	×	120	*
80	8	3/4	×	150	*
100	8	7/8	×	170	*
150	12	1	×	210	*
200	12	11/8	×	230	*
250	16	11/4	×	260	*
300	20	11/4	×	270	*
350	20	13/8	×	290	*
400	20	11/2	×	310	*
450	20	1-5/8	×	340	*
500	24	1-5/8	×	360	*
600	24	1-7/8	×	415	*

BOLT SET ORIFICE FLANGES

DN	No.	Inch		mm	81.38.63
15	4	5/8	×	135	*
20	4	5/8	×	135	*
25	4	5/8	×	135	*
40	4	3/4	×	140	*
50	8	5/8	×	150	*
80	8	3/4	×	150	*
100	8	7/8	×	160	*
150	12	1	×	180	*
200	12	1-1/8	×	210	*
250	16	1-1/4	×	230	*
300	20	1-1/4	×	240	*
350	20	1-3/8	×	260	*
400	20	1-1/2	×	275	*
450	20	1-5/8	×	300	*
500	24	1-5/8	×	320	*
600	24	1-7/8	×	355	*

* DRAIN POINT Fig. 0E

Run DN 15-25	Br DN 15	
Run DN 40	Br DN 20	No.
Branch: Table Page 1		1
Blind Flange		1
Gasket Spiral Wound		1
Gate Valve SW		1
Pipe Nipple 50 mm		2
Stud Bolt with Nuts		4
Welding Neck Flange		1

* DRAIN POINT Fig. 0E

Run DN 50-600	Br DN 20	No.
Branch: Table Page 1		1
Blind Flange		1
Gasket Spiral Wound		1
Gate Valve SW		1
Pipe Nipple 50 mm		2
Stud Bolt with Nuts		4
Welding Neck Flange		1

* VENT POINT Fig. 1E

Run DN 15-25	Br DN 15	
Run DN 40	Br DN 20	No.
Branch: Table Page 1		1
Blind Flange		1
Gasket Spiral Wound		1
Globe Valve Socket		1
Pipe Nipple 50 mm		2
Stud Bolt with Nuts		4
Welding Neck Flange		1

* VENT POINT Fig. 1E

Run DN 50-600	Br DN 20	No
Branch: Table Page 1		1
Blind Flange		1
Gasket Spiral Wound		1
Globe Valve Socket		1
Pipe Nipple 50 mm		2
Stud Bolt with Nuts		4
Welding Neck Flange		1

Base Material: Carbon Steel	First Issue:	Revision:	
Rating: PN 100 (Class 600)		Date:	
Corrosion Allowance: 1 mm		Sign:	

Temperature °C		0	50	100	150	200	250	300	350	400
Pressure Barg.	DN 15-600	102.0	100.0	92.7	90.6	87.8	83.6	77.5	73.9	69.1

TABLE OF SCHEDULES

DN	Schedule
15	80
20	80
25	80
40	80
50	80
80	80
100	80
150	80
200	80
250	80
300	80
350	80
400	80
450	80
500	80
600	80

BRANCH CONNECTIONS 90 DEGREES

Run Size	BRANCH SIZE 15	20	25	40	50	80	100	150	200	250	300	350	400	450	500	600
600	C	C	C	C	E	E	E	E	E	E	E	E	E	E	E	A
500	C	C	C	C	E	E	E	E	E	E	E	E	E	E	A	
450	C	C	C	C	E	E	E	E	E	E	E	E	E	A		
400	C	C	C	C	E	E	E	E	E	E	E	E	A			
350	C	C	C	C	E	E	E	E	E	E	E	A				
300	C	C	C	C	E	E	E	E	E	E	A					
250	C	C	C	C	E	E	E	E	E	A						
200	C	C	C	C	E	E	E	E	A							
150	C	C	C	C	E	E	E	A								
100	C	C	C	C	E	E	A									
80	C	C	C	C	E	A										
50	C	C	C	B	A											
40	C	B	B	A												
25	B	B	A													
20	B	A														
15	A															

Notes:
- Design limits are acc. flange rating ANSI B16.5 Material Group 1.1.
- Piston type check valves for horizontal mounting only.
- Application of other types of branch connections shall be subject to prior approval of company.

CODE	EXPLANATION OF CHARACTERS
A	Equal tee
B	Reducing tee
C	Branch fitting outlet socket-weld
E	Branch outlet reducing butt-weld

Class No.: FN04	Page: 2	Content: Material Descriptions

* PIPE

PIPE	Pipe	DN	15-600	ASTM	A106-B
PNPP	Pipe Nipple 50 mm	DN	15-40	ASTM	A106-B

* FLANGES

BLFL	Blind Flange	DN	15-600	ASTM	A105
SBFL	Spectacle Blind Flange	DN	15-600	ASTM	A516-60
SPRT	Spacer Ring Type (ANS Flanges)	DN	15-600	ASTM	A516-60
WNFL	Welding Neck Flange	DN	15-600	ASTM	A105

* FITTINGS

CAPB	Cap	Butt-Weld. End	DN	15-600	ASTM	A234-WPB
E45B	Elbow 45 Deg.	Butt-Weld. End	DN	15-600	ASTM	A234-WPB
E90B	Elbow 90 Deg.	Butt-Weld. End	DN	15-600	ASTM	A234-WPB
TEEB	Equal Tee	Butt-Weld. End	DN	15-600	ASTM	A234-WPB
E45S	Elbow 45 Deg.	Socket-Weld. End	DN	15-40	ASTM	A105
E90S	Elbow 90 Deg.	Socket-Weld. End	DN	15-40	ASTM	A105
TEES	Equal Tee	Socket-Weld. End	DN	15-40	ASTM	A105
COUS	Coupling	Socket-Weld. End	DN	15-40	ASTM	A105
CAPS	Cap	Socket-Weld. End	DN	15-40	ASTM	A105

* REDUCING FITTINGS

BROS	Branch Outlet Socket-Weld. End	DN	15-50	ASTM	A105
BROB	Branch Outlet Red. Butt-Weld.	DN	80-600	ASTM	A105
RECB	Reducer Conc. Butt-Weld. End	DN	20-600	ASTM	A234-WPB
REEB	Reducer Ecc. Butt-Weld. End	DN	20-600	ASTM	A234-WPB
TERB	Tee Reducing Butt-Weld. End	DN	20-600	ASTM	A234-WPB
TERS	Tee Reducing Socket-Weld. End	DN	20-40	ASTM	A105

Note:
- For full material description see relevant MESC buying description.
- Where both socket weld and butt weld fittings are specified, preference is subject to company approval.

* VALVES

CHVF	Check Valve Flanged	DN	15-600	Body:	ASTM	A216-WCB/WCC, A105
				Trim:	AISI	316L + Stellite 6
GAVF	Gate Valve Flanged	DN	15-600	Body:	ASTM	A216-WCB/WCC, A105
				Trim:	AISI	316L + Stellite 6
GLVF	Globe Valve Flanged	DN	15-150	Body:	ASTM	A216-WCB/WCC, A105
				Trim:	AISI	316L + Stellite 6

* MISCELLANEOUS

GKSW	Gasket, Spiral Wound	DN	15-600	AISI 316, 316L, Graphite Filled CS Centring Ring		
ORFS	Orifice Flange Set	DN	50-600		ASTM	A105
STBT	Stud Bolt with Nuts		_____	Studs:	ASTM	A193-B7
				Nuts:	ASTM	A194-2H

Class No.: FN04	Page: 3	Content: Piping Components

ITEM DESCRIPTION		MESC	NOMINAL PIPE SIZE 15	20	25	40	50	80	100	150	200	250	300	350	400	450	500	600
* PIPE																		
Pipe		74.30.21/31	*	*	*	*	*	*	*	*	*	*	*	*	*	*	*	*
Pipe Nipple 50 mm		76.30.57	*	*	*	*												
* FLANGES																		
Blind Flange		76.62.10	*	*	*	*	*	*	*	*	*	*	*	*	*	*	*	*
Spectacle Blind Flange		76.88.06	*	*	*	*	*	*	*	*	*	*	*	*	*	*	*	*
Spacer Ring Type (ANS Flanges)		76.88.16	*	*	*	*	*	*	*	*	*	*	*	*	*	*	*	*
Welding Neck Flange		76.62.79	*	*	*	*	*	*	*	*	*	*	*	*	*	*	*	*
* FITTINGS																		
Cap	Butt-Weld. End	76.30.18	*	*	*	*	*	*	*	*	*	*	*	*	*	*	*	*
Elbow 45 Deg.	Butt-Weld. End	76.30.38	*	*	*	*	*	*	*	*	*	*	*	*	*	*	*	*
Elbow 90 Deg.	Butt-Weld. End	76.30.39/40	*	*	*	*	*	*	*	*	*	*	*	*	*	*	*	*
Equal Tee	Butt-Weld. End	76.30.84	*	*	*	*	*	*	*	*	*	*	*	*	*	*	*	*
Elbow 45 Deg.	Socket-Weld. End	76.34.38	*	*	*	*												
Elbow 90 Deg.	Socket-Weld. End	76.34.39	*	*	*	*												
Equal Tee	Socket-Weld. End	76.34.84	*	*	*	*												
Coupling	Socket-Weld. End	76.34.28	*	*	*	*												
Cap	Socket-Weld. End	76.34.18	*	*	*	*												
* VALVES																		
Check Valve Flanged		75.37.15	*	*	*	*	*	*	*	*	*	*	*	*	*	*	*	*
Gate Valve Flanged		75.37.35	*	*	*	*	*	*	*	*	*	*	*	*	*	*	*	*
Globe Valve Flanged		75.37.45	*	*	*	*	*	*	*	*								
* MISCELLANEOUS																		
Gasket, Spiral Wound		85.41.36	*	*	*	*	*	*	*	*	*	*	*	*	*	*	*	*
Orifice Flange Set		60.88.52					*	*	*	*	*	*	*	*	*	*	*	*

Run		Br.	BROB 76.80.05	RECB 76.30.72	REEB 76.30.73	TERB 76.30.85	TERS 76.34.85
20	×	15		*	*	*	*
25	×	15		*	*	*	*
25	×	20		*	*	*	*
40	×	15		*	*	*	*
40	×	20		*	*	*	*
40	×	25		*	*	*	*
50	×	20		*	*	*	
50	×	25		*	*	*	
50	×	40		*	*	*	
80	×	40		*	*	*	
80	×	50	*	*	*	*	
100	×	40		*	*		
100	×	50	*	*	*	*	
100	×	80	*	*	*	*	
150	×	50	*				
150	×	80	*	*	*	*	
150	×	100	*	*	*	*	
200	×	50	*				
200	×	80	*				
200	×	100	*	*	*	*	
200	×	150	*	*	*	*	
250	×	50	*				
250	×	80	*				
250	×	100	*	*	*	*	
250	×	150	*	*	*	*	
250	×	200	*	*	*	*	
300	×	50	*				
300	×	80	*				
300	×	100	*				
300	×	150	*	*	*	*	
300	×	200	*	*	*	*	
300	×	250	*	*	*	*	
350	×	50	*				
350	×	80	*				
350	×	100	*				
350	×	150	*	*	*	*	
350	×	200	*	*	*	*	
350	×	250	*	*	*	*	
350	×	300	*	*	*	*	

Run		Br.	BROB 76.80.05	RECB 76.30.72	REEB 76.30.73	TERB 76.30.85
400	×	50	*			
400	×	80	*			
400	×	100	*			
400	×	150	*	*	*	*
400	×	200	*	*	*	*
400	×	250	*	*	*	*
400	×	300	*	*	*	*
400	×	350	*	*	*	*
450	×	50	*			
450	×	80	*			
450	×	100	*			
450	×	150	*			
450	×	200	*	*	*	*
450	×	250	*	*	*	*
450	×	300	*	*	*	*
450	×	350	*	*	*	*
450	×	400	*	*	*	*
500	×	50	*			
500	×	80	*			
500	×	100	*			
500	×	150	*			
500	×	200	*	*	*	*
500	×	250	*	*	*	*
500	×	300	*	*	*	*
500	×	350	*	*	*	*
500	×	400	*	*	*	*
500	×	450	*	*	*	*
600	×	50	*			
600	×	80	*			
600	×	100	*			
600	×	150	*			
600	×	200	*			
600	×	250	*	*	*	*
600	×	300	*	*	*	*
600	×	350	*	*	*	*
600	×	400	*	*	*	*
600	×	450	*	*	*	*
600	×	500	*	*	*	*

COMP. NAME	DESCRIPTION
BROS	Branch Fitting Socket-Weld. Outlet
BROB	Branch Outlet Red. Butt-Weld
RECB	Reducer Conc. Butt-Weld. End
REEB	Reducer Ecc. Butt-Weld. End
TERB	Tee Reducing Butt-Weld. End
TERS	Tee Reducing Socket-Weld. End

RUN	Br.	BROS 76.80.26
40-150	15	*
200-600		*
50-80	20	*
100-600		*
50	25	*
80-100		*
150-600		*
80-100	40	*
150-300		*
350-600		*

BOLT SET FLANGED JOINTS

DN	No.	Inch		mm	81.38.61
15	4	1/2	×	80	*
20	4	5/8	×	90	*
25	4	5/8	×	90	*
40	4	3/4	×	110	*
50	8	5/8	×	110	*
80	8	3/4	×	130	*
100	8	7/8	×	150	*
150	12	1	×	170	*
200	12	11/8	×	190	*
250	16	11/4	×	220	*
300	20	11/4	×	220	*
350	20	13/8	×	240	*
400	20	11/2	×	250	*
450	20	15/8	×	280	*
500	24	15/8	×	290	*
600	24	17/8	×	330	*

BOLT SET ORIFICE FLANGES

DN	No.	Inch		mm	81.38.61
15	4	5/8	×	135	*
20	4	5/8	×	135	*
25	4	5/8	×	135	*
40	4	3/4	×	140	*
50	8	5/8	×	150	*
80	8	3/4	×	150	*
100	8	7/8	×	160	*
150	12	1	×	180	*
200	12	11/8	×	210	*
250	16	11/4	×	230	*
300	20	11/4	×	240	*
350	20	13/8	×	260	*
400	20	11/2	×	275	*
450	20	15/8	×	300	*
500	24	15/8	×	320	*
600	24	17/8	×	355	*

BOLT SET SPECTACLE/SPACER

DN	No.	Inch		mm	81.38.61
15	4	1/2	×	90	*
20	4	5/8	×	100	*
25	4	5/8	×	100	*
40	4	3/4	×	120	*
50	8	5/8	×	120	*
80	8	3/4	×	150	*
100	8	7/8	×	170	*
150	12	1	×	210	*
200	12	11/8	×	230	*
250	16	11/4	×	260	*
300	20	11/4	×	270	*
350	20	13/8	×	290	*
400	20	11/2	×	310	*
450	20	15/8	×	340	*
500	24	15/8	×	360	*
600	24	17/8	×	415	*

* DRAIN POINT	Fig. 0I		
Run DN 15-25	Br	DN 15	
Run DN 40	Br	DN 20	No.
Branch: Table Page 1			1
Blind Flange			1
Gasket Spiral Wound			2
Gate Valve Flanged			1
Stud Bolt with Nuts			8
Welding Neck Flange			1

* DRAIN POINT	Fig. 0J		
Run DN 50-600	Br	DN 20	No.
Branch: Table Page 1			1
Blind Flange			1
Gasket Spiral Wound			2
Gate Valve Flanged			1
Pipe Nipple 50 mm			1
Stud Bolt with Nuts			8
Welding Neck Flange		1	

* VENT POINT	Fig. 1I		
Run DN 15-25	Br	DN 15	
Run DN 40	Br	DN 20	No.
Branch: Table Page 1			1
Blind Flange			1
Gasket Spiral Wound			2
Globe Valve Flanged			1
Stud Bolt with Nuts			8
Welding Neck Flange			1

* VENT POINT	Fig. 1J		
Run DN 50-600	Br	DN 20	No.
Branch: Table Page 1			1
Blind Flange			1
Gasket Spiral Wound			2
Globe Valve Flanged			1
Pipe Nipple 50 mm			1
Stud Bolt with Nuts			8
Welding Neck Flange			1

Base Material: Carbon Steel, Fine Gr. LT, PWHT	First Issue: Revision:	
Rating: PN 100 (Class 600)	Date:	
Corrosion Allowance: 1 mm	Sign:	

Temperature °C		-50	0	50	100	150	200	250	300	340
Pressure Barg.	DN 15-400	95.8	95.8	94.7	90.3	87.8	85.3	81.1	75.3	72.2

TABLE OF SCHEDULES

DN	Schedule
15	80
20	80
25	80
40	80
50	40
80	40
100	80
150	80
200	80
250	80
300	80
350	80
400	80

BRANCH CONNECTIONS 90 DEGREES

	BRANCH SIZE												
Run Size	15	20	25	40	50	80	100	150	200	250	300	350	400
400	C	C	C	C	E	E	E	E	E	E	E	E	A
350	C	C	C	C	E	E	E	E	E	E	E	A	
300	C	C	C	C	E	E	E	E	E	E	A		
250	C	C	C	C	E	E	E	E	E	A			
200	C	C	C	C	E	E	E	E	A				
150	C	C	C	C	E	E	E	A					
100	C	C	C	C	E	E	A						
80	C	C	C	C	E	A							
50	C	C	C	B	A								
40	C	B	B	A									
25	B	B	A										
20	B	A											
15	A												

Notes:
- Design limits are acc. flange rating ANSI B16.5 Material Group 1.3.
- Welds, attachment welds and cord formed piping parts shall be post-weld heat treaded.
- Application of other types of branch connections is subject to company approval.

CODE	EXPLANATION OF CHARACTERS
A	Equal tee
B	Reducing tee
C	Branch fitting socket weld end outlet
E	Branch outlet reducing butt-weld

* PIPE

PIPE	Pipe	DN	15-400	ASTM	A333-6 (Seamless)
PNPP	Pipe Nipple 50 mm	DN	15-40	ASTM	A333-6 (Seamless)

* FLANGES

BLFL	Blind Flange	DN	15-400	ASTM	A350-LF2
SBFL	Spectacle Blind Flange	DN	15-400	ASTM	A516-60
SPRT	Spacer Ring Type (ANS Flanges)	DN	15-400	ASTM	A516-60
WNFL	Welding Neck Flange	DN	15-400	ASTM	A350-LF2

* FITTINGS

CAPB	Cap	Butt-Weld. End	DN	15-400	ASTM	A420-WPL6
E45B	Elbow 45 Deg.	Butt-Weld. End	DN	15-400	ASTM	A420-WPL6
E90B	Elbow 90 Deg.	Butt-Weld. End	DN	15-400	ASTM	A420-WPL6
TEEB	Equal Tee	Butt-Weld. End	DN	15-400	ASTM	A420-WPL6
E45S	Elbow 45 Deg.	Socket-Weld. End	DN	15-40	ASTM	A350-LF2
E90S	Elbow 90 Deg.	Socket-Weld. End	DN	15-40	ASTM	A350-LF2
TEES	Equal Tee	Socket-Weld. End	DN	15-40	ASTM	A350-LF2
COUS	Coupling	Socket-Weld. End	DN	15-40	ASTM	A350-LF2
CAPS	Cap	Socket-Weld. End	DN	15-40	ASTM	A350-LF2

* REDUCING FITTINGS

BROS	Branch Fitting Outlet Socket-Weld. End	DN	15-40	ASTM	A350-LF2
BROB	Branch Outlet Red. Butt-Weld.	DN	80-400	ASTM	A350-LF2
RECB	Reducer Conc. Butt-Weld. End	DN	20-400	ASTM	A420-WPL6
REEB	Reducer Ecc. Butt-Weld. End	DN	20-400	ASTM	A420-WPL6
TERB	Tee Reducing Butt-Weld. End	DN	20-400	ASTM	A420-WPL6
TERS	Tee Reducing Socket-Weld. End	DN	20-40	ASTM	A350-LF2

Note:
- For full material description see relevant buying description.
- Where both socket weld and butt weld fittings are specified, preference is subject to company approval.

* VALVES

CHVF	Check Valve Flanged	DN	15-400	Body:	ASTM	A352-LCB/LCC
				Trim:	AISI	316, 316L
GAVF	Gate Valve Flanged	DN	15-400	Body:	ASTM	A352-LCB/LCC
				Trim:	AISI	316, 316L
GLVF	Globe Valve Flanged	DN	15-150	Body:	ASTM	A352-LCB/LCC
				Trim:	AISI	316, 316L

* MISCELLANEOUS

GKSW	Gasket, Spiral Wound	DN	15-40	AISI	316, 316L, Graphite Filled CS Centring Ring	
ORFS	Orifice Flange Set	DN	50-400		ASTM	A350-LF2
STBT	Stud Bolt with Nuts		____	Studs:	ASTM	A320-L7
				Nuts:	ASTM	A194-4

Class No.: FN07	Page: 3	Content: Piping Components

ITEM DESCRIPTION			NOMINAL PIPE SIZE 15	20	25	40	50	80	100	150	200	250	300	350	400
* PIPE															
Pipe		74.14.21	*	*	*	*	*	*	*	*	*	*	*	*	*
* FLANGES															
Blind Flange		76.62.12	*	*	*	*	*	*	*	*	*	*	*	*	*
Spectacle Blind Flange		76.88.06	*	*	*	*	*	*	*	*	*	*	*	*	*
Spacer Ring Type (ANS Flanges)		76.88.00	*	*	*	*	*	*	*	*	*	*	*	*	*
Welding Neck Flange		76.62.82	*	*	*	*	*	*	*	*	*	*	*	*	*
* FITTINGS															
Cap	Butt-Weld. End	76.31.18	*	*	*	*	*	*	*	*	*	*	*	*	*
Elbow 45 Deg.	Butt-Weld. End	76.31.38	*	*	*	*	*	*	*	*	*	*	*	*	*
Elbow 90 Deg.	Butt-Weld. End	76.31.39	*	*	*	*	*	*	*	*	*	*	*	*	*
Equal Tee	Butt-Weld. End	76.31.84	*	*	*	*	*	*	*	*	*	*	*	*	*
Elbow 45 Deg.	Socket-Weld. End	76.35.38	*	*	*	*									
Elbow 90 Deg.	Socket-Weld. End	76.35.39	*	*	*	*									
Equal Tee	Socket-Weld. End	76.35.80	*	*	*	*									
Coupling	Socket-Weld. End	76.35.28	*	*	*	*									
Cap	Socket-Weld. End	76.35.18	*	*	*	*									
* VALVES															
Check Valve Flanged		75.42.15	*	*	*	*	*	*	*	*	*	*	*	*	*
Gate Valve Flanged		75.42.35	*	*	*	*	*	*	*	*	*	*	*	*	*
Globe Valve Flanged		75.42.40	*	*	*	*	*	*	*	*					
* MISCELLANEOUS															
Gasket, Spiral Wound		85.41.36	*	*	*	*	*	*	*	*	*	*	*	*	*
Orifice Flange Set		60.88.52	*	*	*	*	*	*	*	*	*	*	*	*	*

Class No.: FN07	Page: 4	Content: Reducing Piping Components

Run		Br.	BROB 76.80.00	RECB 76.31.70	REEB 76.37.71	TERB 76.31.85	TERS 76.35.85
20	×	15		*	*	*	*
25	×	15		*	*	*	*
25	×	20		*	*	*	*
40	×	15				*	*
40	×	20		*	*	*	*
40	×	25		*	*	*	*
50	×	25				*	
50	×	40		*	*	*	
80	×	40		*	*	*	
80	×	50	*	*	*	*	
100	×	50	*	*	*	*	
100	×	80	*	*	*	*	
150	×	50	*				
150	×	80	*	*	*	*	
150	×	100	*	*	*	*	
200	×	50	*				
200	×	80	*				
200	×	100	*	*	*	*	
200	×	150	*	*	*	*	
250	×	50	*				
250	×	80	*				
250	×	100	*			*	
250	×	150	*	*	*	*	
250	×	200	*	*	*	*	
300	×	50	*				
300	×	80	*				
300	×	100	*				
300	×	150	*	*	*	*	
300	×	200	*	*	*	*	
300	×	250	*	*	*	*	

Run		Br.	BROB 76.80.00	RECB 76.31.70	REEB 76.37.71	TERB 76.35.85
350	×	50				
350	×	80				
350	×	100				
350	×	150	*	*	*	*
350	×	200	*	*	*	*
350	×	250	*	*	*	*
350	×	300	*	*	*	*
400	×	50	*			
400	×	80	*			
400	×	100	*			
400	×	150	*	*	*	*
400	×	200	*	*	*	*
400	×	250	*	*	*	*
400	×	300	*	*	*	*
400	×	350	*	*	*	*

COMP. NAME	DESCRIPTION
BROB	Branch Outlet Red. Butt-Weld
RECB	Reducer Conc. Butt-Weld. End
REEB	Reducer Ecc. Butt-Weld. End
TERB	Tee Reducing Butt-Weld. End
TERS	Tee Reducing Socket-Weld. End
BROS	Branch Fitting Socket-Weld. End Outlet

RUN	Br.	BROS 76.80.26
40-150	15	*
200-400		*
50-80	20	*
100-400		*
50	25	*
80-100		*
150-400		*
80-100	40	*
150-300		*
350-400		*

Class No.: FN07	Page: 5	Content: Bolting and Assemblies

BOLT SET FLANGED JOINTS

DN	No.	Inch		mm	81.38.63
15	4	1/2	×	80	*
20	4	5/8	×	90	*
25	4	5/8	×	90	*
40	4	3/4	×	110	*
50	8	5/8	×	110	*
80	8	3/4	×	130	*
100	8	7/8	×	150	*
150	12	1	×	170	*
200	12	11/8	×	190	*
250	16	11/4	×	220	*
300	20	11/4	×	220	*
350	20	13/8	×	240	*
400	20	11/2	×	250	*

BOLT SET SPECTACLE/SPACER

DN	No.	Inch		mm	81.38.63
15	4	1/2	×	90	*
20	4	5/8	×	100	*
25	4	5/8	×	100	*
40	4	3/4	×	120	*
50	8	5/8	×	120	*
80	8	3/4	×	150	*
100	8	7/8	×	170	*
150	12	1	×	216	*
200	12	11/8	×	230	*
250	16	11/4	×	260	*
300	20	11/4	×	270	*
350	20	13/8	×	290	*
400	20	11/2	×	310	*

BOLT SET ORIFICE FLANGES

DN	No.	Inch		mm	81.38.63
15	4	5/8	×	135	*
20	4	5/8	×	135	*
25	4	5/8	×	135	*
40	4	3/4	×	140	*
50	8	5/8	×	150	*
80	8	3/4	×	150	*
100	8	7/8	×	160	*
150	12	1	×	180	*
200	12	1-1/8	×	210	*
250	16	1-1/4	×	230	*
300	20	1-1/4	×	240	*
350	20	1-3/8	×	260	*
400	20	1-1/2	×	275	*

* DRAIN POINT Fig. 0J

Run DN 15-25	Br DN 15	No.
Branch: Table Page 1		1
Blind Flange		1
Gasket Spiral Wound		2
Gate Valve Flanged		1
Pipe Nipple 50 mm		1
Stud Bolt with Nuts		8
Welding Neck Flange		1

* DRAIN POINT Fig. 0J

Run DN 40-40	Br DN 20	No.
Branch: Table Page 1		1
Blind Flange		1
Gasket Spiral Wound		2
Gate Valve Flanged		1
Pipe Nipple 50 mm		1
Stud Bolt with Nuts		8
Welding Neck Flange		1

* DRAIN POINT Fig. 0J

Run DN 50-400	Br DN 20	No.
Branch: Table Page 1		1
Blind Flange		1
Gasket Spiral Wound		2
Gate Valve Flanged		1
Pipe Nipple 50 mm		1
Stud Bolt with Nuts		8
Welding Neck Flange		1

* VENT POINT Fig. 1J

Run DN 15-25	Br DN 15	No.
Branch: Table Page 1		1
Blind Flange		1
Gasket Spiral Wound		2
Globe Valve Flanged		1
Pipe Nipple 50 mm		1
Stud Bolt with Nuts		8
Welding Neck Flange		1

* VENT POINT Fig. 1J

Run DN 40-40	Br DN 20	No.
Branch: Table Page 1		1
Blind Flange		1
Gasket Spiral Wound		2
Globe Valve Flanged		1
Stud Bolt with Nuts		8
Pipe Nipple 50 mm		1
Welding Neck Flange		1

* VENT POINT Fig. 1J

Run DN 50-400	Br DN 20	No.
Branch: Table Page 1		1
Blind Flange		1
Gasket Spiral Wound		2
Globe Valve Flanged		1
Pipe Nipple 50 mm		1
Stud Bolt with Nuts		8
Welding Neck Flange		1

Class No.: FN10	Page: 1	Content: General
Base Material: Carbon Steel	First Issue: Revision:	
Rating: PN 100 (Class 600)	Date:	
Corrosion Allowance: 1 mm	Sign:	

Temperature °C		0	50	100	150	200	250	300	350	400
Pressure Barg.	DN 15-400	102.0	100.0	92.7	90.6	87.8	83.6	77.5	73.9	69.1

TABLE OF SCHEDULES

DN	Schedule
15	80
20	80
25	80
40	80
50	80
80	80
100	80
150	80
200	80
250	80
300	80
350	80
400	80

BRANCH CONNECTIONS 90 DEGREES

Run Size	BRANCH SIZE 15	20	25	40	50	80	100	150	200	250	300	350	400
400	C	C	C	C	E	E	E	E	E	E	E	E	A
350	C	C	C	C	E	E	E	E	E	E	E	A	
300	C	C	C	C	E	E	E	E	E	E	A		
250	C	C	C	C	E	E	E	E	E	A			
200	C	C	C	C	E	E	E	E	A				
150	C	C	C	C	E	E	E	A					
100	C	C	C	C	E	E	A						
80	C	C	C	C	E	A							
50	C	C	C	B	A								
40	C	B	B	A									
25	B	B	A										
20	B	A											
15	A												

Notes:
- Design limits are acc. flange rating ANSI B16.5 Material Group 1.1.
- Piston type check valves for horizontal mounting only.
- Steam traps to be selected by utility engineer.
- API 5L-B welded pipe is normally the most economic choice.
- Application of other types of branch connections is subject to company approval.

CODE	EXPLANATION OF CHARACTERS
A	Equal tee
B	Reducing tee
C	Branch fitting socket weld end outlet
E	Branch outlet reducing butt-weld

Class No.: FN10	Page: 2	Content: Material Descriptions

* PIPE

PIPE	Pipe		DN	15-400	ASTM	A106-B
PNPP	Pipe Nipple 50 mm		DN	15-40	ASTM	A106-B

* FLANGES

BLFL	Blind Flange		DN	15-400	ASTM	A105
SBFL	Spectacle Blind Flange		DN	15-400	ASTM	A516-60
SPRT	Spacer Ring Type (ANS Flanges)		DN	15-400	ASTM	A516-60
WNFL	Welding Neck Flange		DN	15-400	ASTM	A105

* FITTINGS

CAPB	Cap	Butt-Weld. End	DN	15-400	ASTM	A234-WPB
E45B	Elbow 45 Deg.	Butt-Weld. End	DN	15-400	ASTM	A234-WPB
E90B	Elbow 90 Deg.	Butt-Weld. End	DN	15-400	ASTM	A234-WPB
TEEB	Equal Tee	Butt-Weld. End	DN	15-400	ASTM	A234-WPB
E45S	Elbow 45 Deg.	Socket-Weld. End	DN	15-40	ASTM	A105
E90S	Elbow 90 Deg.	Socket-Weld. End	DN	15-40	ASTM	A105
TEES	Equal Tee	Socket-Weld. End	DN	15-40	ASTM	A105
COUS	Coupling	Socket-Weld. End	DN	15-40	ASTM	A105
CAPS	Cap	Socket-Weld. End	DN	15-40	ASTM	A105

* REDUCING FITTINGS

BROS	Branch Fitting Outlet Socket-Weld. End		DN	15-40	ASTM	A105
BROB	Branch Outlet Red. Butt-Weld.		DN	80-400	ASTM	A105
RECB	Reducer Conc. Butt-Weld. End		DN	20-400	ASTM	A234-WPB
REEB	Reducer Ecc. Butt-Weld. End		DN	20-400	ASTM	A234-WPB
TERB	Tee Reducing Butt-Weld. End		DN	20-400	ASTM	A234-WPB
TERS	Tee Reducing Socket-Weld. End		DN	20-40	ASTM	A105

Note:
- For full material description see relevant MESC buying description.
- Where both socket weld and butt weld fittings are specified, preference is subject to company approval.

* VALVES

CHVB	Check Valve Butt-Weld. End	DN	50-400	Body:	ASTM	A216-WCB/WCC, A105
				Trim:	AISI	316 (L) + Stellite 6
CHVS	Check Valve Socket	DN	15-40	Body:	ASTM	A216-WCB/WCC, A105
				Trim:	AISI	316 (L) + Stellite 6
GABS	Gate Valve SW Bellow Sealed	DN	15-40	Body:	ASTM	A216-WCB/WCC, A105
				Trim:	AISI	316 (L) + Stellite 6
GAVB	Gate Valve Butt-Weld. End	DN	50-400	Body:	ASTM	A216-WCB/WCC, A105
				Trim:	AISI	316 (L) + Stellite 6
GAVF	Gate Valve Flanged	DN	15-50	Body:	ASTM	A216-WCB/WCC, A105
				Trim:	AISI	316 (L) + Stellite 6
GAVS	Gate Valve Sw	DN	15-40	Body:	ASTM	A216-WCB/WCC, A105
				Trim:	AISI	316 (L) + Stellite 6
GLBS	Globe Valve SW Bellow Sealed	DN	15-40	Body:	ASTM	A216-WCB/WCC, A105
				Trim:	AISI	316 (L) + Stellite 6
GLVS	Globe Valve Socket	DN	15-40	Body:	ASTM	A216-WCB/WCC, A105
				Trim:	AISI	316 (L) + Stellite 6

* MISCELLANEOUS

GKSW	Gasket, Spiral Wound	DN	15-400	AISI	316, 316L, Graphite Filled CS Centring Ring	
ORFS	Orifice Flange Set	DN	50-400		ASTM	A105
STBT	Stud Bolt with Nuts		_____		Studs: ASTM	A193-B7
					Nuts: ASTM	A194-2H

Class No.: FN10	Page: 3	Content: Piping Components

ITEM DESCRIPTION			NOMINAL PIPE SIZE 15	20	25	40	50	80	100	150	200	250	300	350	400
* PIPE															
Pipe		74.30.21	*	*	*	*	*	*	*	*	*	*	*	*	*
Pipe Nipple 50 mm		76.30.57	*	*	*	*									
* FLANGES															
Blind Flange		76.62.10	*	*	*	*	*	*	*	*	*	*	*	*	*
Spectacle Blind Flange		76.88.06	*	*	*	*	*	*	*	*	*	*	*	*	*
Spacer Ring Type (ANS Flanges)		76.88.16	*	*	*	*	*	*	*	*	*	*	*	*	*
Welding Neck Flange		76.62.79	*	*	*	*	*	*	*	*	*	*	*	*	*
* FITTINGS															
Cap	Butt-Weld. End	76.30.18	*	*	*	*	*	*	*	*	*	*	*	*	*
Elbow 45 Deg.	Butt-Weld. End	76.30.38	*	*	*	*	*	*	*	*	*	*	*	*	*
Elbow 90 Deg.	Butt-Weld. End	76.30.40	*	*	*	*	*	*	*	*	*	*	*	*	*
Equal Tee	Butt-Weld. End	76.30.84	*	*	*	*	*	*	*	*	*	*	*	*	*
Elbow 45 Deg.	Socket-Weld. End	76.34.38	*	*	*	*									
Elbow 90 Deg.	Socket-Weld. End	76.34.39	*	*	*	*									
Equal Tee	Socket-Weld. End	76.34.84	*	*	*	*									
Coupling	Socket-Weld. End	76.34.28	*	*	*	*									
Cap	Socket-Weld. End	76.34.18	*	*	*	*									
* VALVES															
Check Valve Butt-Weld. End		75.56.19				*	*	*	*	*	*	*	*	*	
Check Valve Socket		75.56.13	*	*	*	*									
Gate Valve SW Bellows Sealed		75.56.35	*	*	*	*									
Gate Valve Butt-Weld. End		75.56.38				*	*	*	*	*	*	*	*	*	
Gate Valve Flanged		75.37.35	*	*	*	*	*								
Gate Valve Socket		75.56.35	*	*	*	*									
Globe Valve SW Bellows Sealed		75.56.45	*	*	*	*									
Globe Valve Socket		75.56.45	*	*	*	*									
* MISCELLANEOUS															
Gasket, Spiral Wound		85.41.36	*	*	*	*	*	*	*	*	*	*	*	*	*
Orifice Flange Set		60.88.52					*	*	*	*	*	*	*	*	*

Class No.:	FN10	Page:	4	Content:	Reducing Piping Components

Run		Br.	BROB 76.80.05	RECB 76.30.71	REEB 76.30.73	TERB 76.30.85	TERS 76.34.85
20	×	15		*	*	*	*
25	×	15		*	*	*	*
25	×	20		*	*	*	*
40	×	15		*	*	*	*
40	×	20		*	*	*	*
40	×	25		*	*	*	*
50	×	20		*	*		
50	×	25		*	*		
50	×	40		*	*		
80	×	40		*	*	*	
80	×	50	*	*	*	*	
100	×	40		*	*		
100	×	50	*	*	*	*	
100	×	80	*	*	*	*	
150	×	50	*				
150	×	80	*	*	*	*	
150	×	100	*	*	*	*	
200	×	50	*				
200	×	80	*				
200	×	100	*	*	*	*	
200	×	150	*	*	*	*	
250	×	50	*				
250	×	80	*				
250	×	100	*	*	*	*	
250	×	150	*	*	*	*	
250	×	200	*	*	*	*	
300	×	50	*				
300	×	80	*				
300	×	100	*				
300	×	150	*	*	*	*	
300	×	200	*	*	*	*	
300	×	250	*	*	*	*	
350	×	50	*				
350	×	80	*				
350	×	100	*				
350	×	150	*	*	*	*	
350	×	200	*	*	*	*	
350	×	250	*	*	*	*	
350	×	300	*	*	*	*	

Run		Br.	BROB 76.80.05	RECB 76.30.71	REEB 76.30.73	TERB 76.30.85
400	×	50	*			
400	×	80	*			
400	×	100	*			
400	×	150	*	*	*	*
400	×	200	*	*	*	*
400	×	250	*	*	*	*
400	×	300	*	*	*	*
400	×	350	*	*	*	*

COMP. NAME	DESCRIPTION
BROS	Branch Fitting Socket-Weld. Outlet
BROB	Branch Outlet Red. Butt-Weld
RECB	Reducer Conc. Butt-Weld. End
REEB	Reducer Ecc. Butt-Weld. End
TERB	Tee Reducing Butt-Weld. End
TERS	Tee Reducing Socket-Weld. End

RUN	Br.	BROS 76.80.26
40-150	15	*
200-400		*
50-80	20	*
100-400		*
50	25	*
80-100		*
150-400		*
80-100	40	*
150-300		*
350-400		*

Class No.:	FN10	Page:	5	Content:	Bolting and Assemblies

BOLT SET FLANGED JOINTS

DN	No.	Inch		mm	81.38.61
15	4	1/2	×	80	*
20	4	5/8	×	90	*
25	4	5/8	×	90	*
40	4	3/4	×	110	*
50	8	5/8	×	110	*
80	8	3/4	×	130	*
100	8	7/8	×	150	*
150	12	1	×	170	*
200	12	11/8	×	190	*
250	16	11/4	×	220	*
300	20	11/4	×	220	*
350	20	13/8	×	240	*
400	20	11/2	×	250	*

BOLT SET SPECTACLE/SPACER

DN	No.	Inch		mm	81.38.61
15	4	1/2	×	90	*
20	4	5/8	×	100	*
25	4	5/8	×	100	*
40	4	3/4	×	120	*
50	8	5/8	×	120	*
80	8	3/4	×	150	*
100	8	7/8	×	170	*
150	12	1	×	210	*
200	12	11/8	×	230	*
250	16	11/4	×	260	*
300	20	11/4	×	270	*
350	20	13/8	×	290	*
400	20	11/2	×	310	*

BOLT SET ORIFICE FLANGES

DN	No.	Inch		mm	81.38.63
15	4	5/8	×	135	*
20	4	5/8	×	135	*
25	4	5/8	×	135	*
40	4	3/4	×	140	*
50	8	5/8	×	150	*
80	8	3/4	×	150	*
100	8	7/8	×	160	*
150	12	1	×	180	*
200	12	11/8	×	210	*
250	16	11/4	×	230	*
300	20	11/4	×	240	*
350	20	13/8	×	260	*
400	20	11/2	×	275	*

* DRAIN POINT	Fig. 0E		
Run DN 15-25	Br DN 15		No.
Branch: Table Page 1			1
Blind Flange			1
Gasket Spiral Wound			1
Gate Valve Socket			1
Pipe Nipple 50 mm			2
Stud Bolt with Nuts			4
Welding Neck Flange			1

* DRAIN POINT	Fig. 0E		
Run DN 40-40	Br DN 20		No.
Branch: Table Page 1			1
Blind Flange			1
Gasket Spiral Wound			1
Gate Valve Socket			1
Pipe Nipple 50 mm			2
Stud Bolt with Nuts			4
Welding Neck Flange			1

* DRAIN POINT	Fig. 0E		
Run DN 50-400	Br DN 20		No.
Branch: Table Page 1			1
Blind Flange			1
Gasket Spiral Wound			1
Gate Valve Socket			1
Pipe Nipple 50 mm			2
Stud Bolt with Nuts			4
Welding Neck Flange			1

* VENT POINT	Fig. 1E		
Run DN 15-25	Br DN 15		No.
Branch: Table Page 1			1
Blind Flange			1
Gasket Spiral Wound			1
Globe Valve Socket			1
Pipe Nipple 50 mm			2
Stud Bolt with Nuts			4
Welding Neck Flange			1

* VENT POINT	Fig. 1E		
Run DN 40-40	Br DN 20		No.
Branch: Table Page 1			1
Blind Flange			1
Gasket Spiral Wound			1
Globe Valve Socket			1
Pipe Nipple 50 mm			2
Stud Bolt with Nuts			4
Welding Neck Flange			1

* VENT POINT	Fig. 1E		
Run DN 50-400	Br DN 20		No.
Branch: Table Page 1			1
Blind Flange			1
Gasket Spiral Wound			1
Globe Valve Socket			1
Pipe Nipple 50 mm			2
Stud Bolt with Nuts			4
Welding Neck Flange			1

Class No.: FN14	Page: 1	Content: General
Base Material: Carbon Steel	First Issue: Revision:	
Rating: PN 100 (Class 600)	Date:	
Corrosion Allowance: 1 mm	Sign:	

Temperature °C		0	50	100	150	200	250	300	350	400
Pressure Barg.	DN 15-600	102.0	100.1	92.8	90.6	87.8	83.6	77.5	73.9	69.1

TABLE OF SCHEDULES

BRANCH CONNECTIONS 90 DEGREES

DN	Schedule	Run Size	BRANCH SIZE 15	20	25	40	50	80	100	150	200	250	300	350	400	450	500	600
15	80	600	C	C	C	C	E	E	E	E	E	E	E	E	E	E	E	A
20	80	500	C	C	C	C	E	E	E	E	E	E	E	E	E	E	A	
25	80	450	C	C	C	C	E	E	E	E	E	E	E	E	E	A		
40	80	400	C	C	C	C	E	E	E	E	E	E	E	E	A			
50	80	350	C	C	C	C	E	E	E	E	E	E	E	A				
80	80	300	C	C	C	C	E	E	E	E	E	E	A					
100	80	250	C	C	C	C	E	E	E	E	E	A						
150	80	200	C	C	C	C	E	E	E	E	A							
200	80	150	C	C	C	C	E	E	E	A								
250	80	100	C	C	C	C	E	E	A									
300	80	80	C	C	C	C	E	A										
350	80	50	C	C	C	B	A											
400	80	40	C	B	B	A												
450	80	25	B	B	A													
500	80	20	B	A														
600	80	15	A															

Notes:
- Design limits are acc. flange rating ANSI B16.5 Material Group 1.1.
- Piston type check valves for horizontal mounting only.
- Application of other types of branch connections is subject to company approval.

CODE	EXPLANATION OF CHARACTERS
A	Equal tee
B	Reducing tee
C	Branch fitting socket weld end outlet
E	Branch outlet reducing butt-weld

Class No.: FN14	Page: 2	Content: Material Descriptions

* PIPE

PIPE	Pipe	DN	15-600	ASTM	A106-B
PNPP	Pipe Nipple 50 mm	DN	15-40	ASTM	A106-B

* FLANGES

BLFL	Blind Flange	DN	15-600	ASTM	A105
SBFL	Spectacle Blind Flange	DN	15-600	ASTM	A516-60
SPRT	Spacer Ring Type (ANS Flanges)	DN	15-600	ASTM	A516-60
WNFL	Welding Neck Flange	DN	15-600	ASTM	A105

* FITTINGS

CAPB	Cap	Butt-Weld. End	DN	15-600	ASTM	A234-WPB
E45B	Elbow 45 Deg.	Butt-Weld. End	DN	15-600	ASTM	A234-WPB
E90B	Elbow 90 Deg.	Butt-Weld. End	DN	15-600	ASTM	A234-WPB
TEEB	Equal Tee	Butt-Weld. End	DN	15-600	ASTM	A234-WPB
E45S	Elbow 45 Deg.	Socket-Weld. End	DN	15-40	ASTM	A105
E90S	Elbow 90 Deg.	Socket-Weld. End	DN	15-40	ASTM	A105
TEES	Equal Tee	Socket-Weld. End	DN	15-40	ASTM	A105
COUS	Coupling	Socket-Weld. End	DN	15-40	ASTM	A105
CAPS	Cap	Socket-Weld. End	DN	15-40	ASTM	A105

* REDUCING FITTINGS

BROS	Branch Fitting Outlet Socket-Weld. End	DN	15-40	ASTM	A105
BROB	Branch Outlet Red. Butt-Weld .	DN	80-600	ASTM	A105
RECB	Reducer Conc. Butt-Weld. End	DN	20-600	ASTM	A234-WPB
REEB	Reducer Ecc. Butt-Weld. End	DN	20-600	ASTM	A234-WPB
TERB	Tee Reducing Butt-Weld. End	DN	20-600	ASTM	A234-WPB
TERS	Tee Reducing Socket-Weld. End	DN	20-40	ASTM	A105

Note:
- For full material description see relevant MESC buying description.
- Where both socket weld and butt weld fittings are specified, preference is subject to company approval.

* VALVES

CHVB	Check Valve Butt-Weld. End	DN	15-600	Body:	ASTM	A216-WCB/WCC, A105
				Trim:	AISI	410
GAVB	Gate Valve Butt-Weld. End	DN	15-600	Body:	ASTM	A216-WCB/WCC, A105
				Trim:	AISI	410
GLVB	Globe Valve Butt-Weld. End	DN	15-150	Body:	ASTM	A216-WCB/WCC, A105
				Trim:	AISI	410
GAVF	Gate Valve Flange End	DN	15-50	Body:	ASTM	A216-WCB/WCC, A105
				Trim:	AISI	410

* MISCELLANEOUS

GKSW	Gasket, Spiral Wound	DN	15-600	AISI 316, 316L, Graphited Filled CS Centring, SS Inner-Ring		
ORFS	Orifice Flange Set	DN	50-600		ASTM	A-105
STBT	Stud Bolt with Nuts		_____	Studs:	ASTM	A193-B7
				Nuts:	ASTM	A194-2H

Class No.: FN14	Page: 3	Content: Piping Components

ITEM DESCRIPTION			NOMINAL PIPE SIZE 15	20	25	40	50	80	100	150	200	250	300	350	400	450	500	600
* PIPE																		
Pipe		74.30.21	*	*	*	*	*	*	*	*	*	*	*	*	*	*	*	*
Pipe Nipple 50 mm		76.30.57	*	*	*	*												
* FLANGES																		
Blind Flange		76.62.10	*	*	*	*	*	*	*	*	*	*	*	*	*			
Spectacle Blind Flange		76.88.06	*	*	*	*	*	*	*	*	*	*	*	*	*			
Spacer Ring Type (ANS Flanges)		76.88.00	*	*	*	*	*	*	*	*	*	*	*	*	*			
Welding Neck Flange		76.62.79	*	*	*	*	*	*	*	*	*	*	*	*	*			
* FITTINGS																		
Cap	Butt-Weld. End	76.30.18	*	*	*	*	*	*	*	*	*	*	*	*	*			
Elbow 45 Deg.	Butt-Weld. End	76.30.38	*	*	*	*	*	*	*	*	*	*	*	*	*			
Elbow 90 Deg.	Butt-Weld. End	76.30.40	*	*	*	*	*	*	*	*	*	*	*	*	*			
Equal Tee	Butt-Weld. End	76.30.84	*	*	*	*	*	*	*	*	*	*	*	*	*			
Elbow 45 Deg.	Socket-Weld. End	76.34.38	*	*	*	*												
Elbow 90 Deg.	Socket-Weld. End	76.34.39	*	*	*	*												
Equal Tee	Socket-Weld. End	76.34.84	*	*	*	*												
Coupling	Socket-Weld. End	76.34.28	*	*	*	*												
Cap	Socket-Weld. End	76.34.18	*	*	*	*												
* VALVES																		
Check Valve Butt-Weld. End		75.56.19	*	*	*	*	*	*	*	*	*	*	*	*	*			
Gate Valve Butt-Weld. End		75.56.38	*	*	*	*	*	*	*	*	*	*	*	*	*			
Globe Valve Butt-Weld. End		75.56.50	*	*	*	*	*	*	*	*								
* MISCELLANEOUS																		
Gasket, Spiral Wound		85.41.36	*	*	*	*	*	*	*	*	*	*	*	*	*			
Orifice Flange Set		60.88.52					*	*	*	*	*	*	*	*	*	*	*	*

Class No.:	FN14	Page:	4	Content:	Reducing Piping Components

Run		Br.	BROB 76.80.05	RECB 76.30.72	REEB 76.30.73	TERB 76.30.85	TERS 76.34.85
20	×	15		*	*	*	*
25	×	15		*	*	*	*
25	×	20		*	*	*	*
40	×	15				*	*
40	×	20		*	*	*	*
40	×	25		*	*	*	*
50	×	20				*	
50	×	25		*	*	*	
50	×	40		*	*	*	
80	×	40		*	*	*	
80	×	50	*	*	*	*	
100	×	50	*	*	*	*	
100	×	80	*	*	*	*	
150	×	50	*				
150	×	80	*	*	*	*	
150	×	100	*	*	*	*	
200	×	50	*				
200	×	80	*				
200	×	100	*	*	*	*	
200	×	150	*	*	*	*	
250	×	50	*				
250	×	80	*				
250	×	100	*			*	
250	×	150	*	*	*	*	
250	×	200	*	*	*	*	
300	×	50	*				
300	×	80	*				
300	×	100	*				
300	×	150	*	*	*	*	
300	×	200	*	*	*	*	
300	×	250	*	*	*	*	
350	×	50	*				
350	×	80	*				
350	×	100	*				
350	×	150	*			*	
350	×	200	*	*	*	*	
350	×	250	*	*	*	*	
350	×	300	*	*	*	*	

Run		Br.	BROB 76.80.05	RECB 76.30.72	REEB 76.30.73	TERB 76.30.85
400	×	50	*			
400	×	80	*			
400	×	100	*			
400	×	150	*			*
400	×	200	*	*	*	*
400	×	250	*	*	*	*
400	×	300	*	*	*	*
400	×	350	*	*	*	*
450	×	50	*			
450	×	80	*			
450	×	100	*			
450	×	150	*			
450	×	200	*	*	*	*
450	×	250	*	*	*	*
450	×	300	*	*	*	*
450	×	350	*	*	*	*
450	×	400	*	*	*	*
500	×	50	*			
500	×	80	*			
500	×	100	*			
500	×	150	*			
500	×	200	*	*	*	*
500	×	250	*	*	*	*
500	×	300	*	*	*	*
500	×	350	*	*	*	*
500	×	400	*	*	*	*
500	×	450	*	*	*	*
600	×	50	*			
600	×	80	*			
600	×	100	*			
600	×	150	*			
600	×	200	*	*	*	*
600	×	250	*	*	*	*
600	×	300	*	*	*	*
600	×	350	*	*	*	*
600	×	400	*	*	*	*
600	×	450	*	*	*	*
600	×	500	*	*	*	*

COMP. NAME	DESCRIPTION
BROB	Branch Outlet Red. Butt-Weld
RECB	Reducer Conc. Butt-Weld. End
REEB	Reducer Ecc. Butt-Weld. End
TERB	Tee Reducing Butt-Weld. End
TERS	Tee Reducing Socket-Weld. End
BROS	Branch Fitting Socket-Weld. End Outlet

RUN	Br.	BROS 76.80.26
40-150	15	*
200-600		*
50-80	20	*
100-600		*
50	25	*
80-100		*
150-600		*
80-100	40	*
150-300		*
350-600		*

Class No.:	FN14	Page:	5	Content:	Bolting and Assemblies

BOLT SET FLANGED JOINTS

DN	No.	Inch		mm	81.38.61
15	4	1/2	×	80	*
20	4	5/8	×	90	*
25	4	5/8	×	90	*
40	4	3/4	×	110	*
50	8	5/8	×	110	*
80	8	5/8	×	130	*
100	8	7/8	×	150	*
150	12	1	×	170	*
200	12	11/8	×	190	*
250	16	11/4	×	220	*
300	20	11/4	×	220	*
350	20	13/8	×	240	*
400	20	11/2	×	250	*
450	20	1-5/8	×	280	*
500	24	1-5/8	×	290	*
600	24	1-7/8	×	330	*

BOLT SET SPECTACLE/SPACER

DN	No.	Inch		mm	81.38.61
15	4	1/2	×	90	*
20	4	5/8	×	100	*
25	4	5/8	×	100	*
40	4	3/4	×	120	*
50	8	5/8	×	120	*
80	8	3/4	×	150	*
100	8	7/8	×	170	*
150	12	1	×	210	*
200	12	11/8	×	230	*
250	16	11/4	×	260	*
300	20	11/4	×	270	*
350	20	13/8	×	290	*
400	20	11/2	×	310	*
450	20	1-5/8	×	340	*
500	24	1-5/8	×	360	*
600	24	1-7/8	×	415	*

BOLT SET ORIFICE FLANGES

DN	No.	Inch		mm	81.38.63
15	4	5/8	×	135	*
20	4	5/8	×	135	*
25	4	5/8	×	135	*
40	4	3/4	×	140	*
50	8	5/8	×	150	*
80	8	3/4	×	150	*
100	8	7/8	×	160	*
150	12	1	×	180	*
200	12	1-1/8	×	210	*
250	16	1-1/4	×	230	*
300	20	1-1/4	×	240	*
350	20	1-3/8	×	260	*
400	20	1-1/2	×	275	*
450	20	1-5/8	×	300	*
500	24	1-5/8	×	320	*
600	24	1-7/8	×	355	*

* DRAIN POINT Fig. 0M

Run DN 15-25	Br DN 15	
Run DN 40	Br DN 20	No.
Branch: Table Page 1		1
Blind Flange		1
Gasket Spiral Wound		1
Gate Valve Butt-Weld. End		1
Stud Bolt with Nuts		4
Welding Neck Flange		1

* DRAIN POINT Fig. 0N

Run DN 50-600	Br DN 20	No.
Branch: Table Page 1		1
Blind Flange		1
Gasket Spiral Wound		1
Gate Valve Butt-Weld. End		1
Pipe Nipple 50 mm		1
Stud Bolt with Nuts		4
Welding Neck Flange		1

* VENT POINT Fig. 1M

Run DN 15-25	Br DN 15	
Run DN 40	Br DN 20	No.
Branch: Table Page 1		1
Blind Flange		1
Gasket Spiral Wound		1
Globe Valve Butt-Weld. End		1
Stud Bolt with Nuts		4
Welding Neck Flange		1

* VENT POINT Fig. 1N

Run DN 50-600	Br DN 20	No.
Branch: Table Page 1		1
Blind Flange		1
Gasket Spiral Wound		1
Globe Valve Butt-Weld. End		1
Pipe Nipple 50 mm		1
Stud Bolt with Nuts		4
Welding Neck Flange		1

Base Material: Alloy Steel (1.25 Cr - 0.5 Mo)	First Issue:	Revision:	
Rating: PN 100 (Class 600)		Date:	
Corrosion Allowance: 1 mm		Sign:	

Temperature °C		0	50	100	150	200	250	300	350	400	450
Pressure Barg.	DN 15-600	103.4	102.2	97.5	92.6	90.8	88.9	84.8	80.3	73.2	67.6

TABLE OF SCHEDULES

DN	Schedule
15	80
20	80
25	80
40	80
50	80
80	80
100	80
150	80
200	80
250	80
300	80
350	80
400	80
450	80
500	80
600	80

BRANCH CONNECTIONS 90 DEGREES

Run Size	BRANCH SIZE 15	20	25	40	50	80	100	150	200	250	300	350	400	450	500	600
600	C	C	C	C	E	E	E	E	E	E	E	E	E	E	E	A
500	C	C	C	C	E	E	E	E	E	E	E	E	E	E	A	
450	C	C	C	C	E	E	E	E	E	E	E	E	E	A		
400	C	C	C	C	E	E	E	E	E	E	E	E	A			
350	C	C	C	C	E	E	E	E	E	E	E	A				
300	C	C	C	C	E	E	E	E	E	E	A					
250	C	C	C	C	E	E	E	E	E	A						
200	C	C	C	C	E	E	E	E	A							
150	C	C	C	C	E	E	E	A								
100	C	C	C	C	E	E	A									
80	C	C	C	C	E	A										
50	C	C	C	B	A											
40	C	B	B	A												
25	B	B	A													
20	B	A														
15	A															

Notes:
- Design limits are acc. flange rating ANSI B16.5 Material Group 1.9.
- For design temperatures of 400°C and below, application of ASTM A193-B7 bolting material and asbestos filled gaskets is possible.
- Application of other types of branch connections is subject to company approval.

CODE	EXPLANATION OF CHARACTERS
A	Equal tee
B	Reducing tee
C	Branch fitting socket-weld end outlet
E	Branch outlet reducing butt-weld

Class No.: FP02	Page: 2	Content: Material Descriptions

* PIPE

PIPE	Pipe	DN	15-400	ASTM	A335-P11 (Seamless)
		DN	450-600	ASTM	A691-1.25CR (Welded)
PNPP	Pipe Nipple 50 mm	DN	15-40	ASTM	A335-P11 (Seamless)

* FLANGES

BLFL	Blind Flange	DN	15-600	ASTM	A182-F11
SBFL	Spectacle Blind Flange	DN	15-600	ASTM	A387-11 CL.2
SPRT	Spacer Ring Type (ANS Flanges)	DN	15-600	ASTM	A387-11 CL.2
WNFL	Welding Neck Flange	DN	15-600	ASTM	A182-F11

* FITTINGS

CAPB	Cap	Butt-Weld. End	DN	15-600	ASTM	A234-WP11
E45B	Elbow 45 Deg.	Butt-Weld. End	DN	15-600	ASTM	A234-WP11
E90B	Elbow 90 Deg.	Butt-Weld. End	DN	15-600	ASTM	A234-WP11
TEEB	Equal Tee	Butt-Weld. End	DN	15-600	ASTM	A234-WP11
E45S	Elbow 45 Deg.	Socket-Weld. End	DN	15-40	ASTM	A182-F11
E90S	Elbow 90 Deg.	Socket-Weld. End	DN	15-40	ASTM	A182-F5
TEES	Equal Tee	Socket-Weld. End	DN	15-40	ASTM	A182-F5
COUS	Coupling	Socket-Weld. End	DN	15-40	ASTM	A182-F11
CAPS	Cap	Socket-Weld. End	DN	15-40	ASTM	A182-F11

* REDUCING FITTINGS

BROS	Branch Fitting Outlet Socket-Weld. End	DN	15-40	ASTM	A182-F11
BROB	Branch Outlet Red. Butt-Weld.	DN	80-600	ASTM	A182-F11
RECB	Reducer Conc. Butt-Weld. End	DN	20-600	ASTM	A234-WP11
REEB	Reducer Ecc. Butt-Weld. End	DN	20-600	ASTM	A234-WP11
TERB	Tee Reducing Butt-Weld. End	DN	20-25	ASTM	A234-WP11
TERS	Tee Reducing Socket-Weld. End	DN	20-40	ASTM	A182-F11

Note:
- For full material description see relevant MESC buying description.
- Where both socket weld and butt weld fittings are specified, preference is subject to company approval.

* VALVES

CHVB	Check Valve Butt-Weld. End	DN	15-400	Body:	ASTM	A217-WC6, A182-F11
				Trim:	AISI	316, 316L
GAVB	Gate Valve Butt-Weld. End	DN	15-600	Body:	ASTM	A217-WC6, A182-F11
				Trim:	AISI	316, 316L
GLVB	Globe Valve Butt-Weld. End	DN	15-150	Body:	AASTM	A217-WC6, A182-F11
				Trim:	AISI	316, 316L

* MISCELLANEOUS

GKSW	Gasket, Spiral Wound	DN	15-600	AISI	304, Graphite Filled, CS Centring-Ring, AISI 304 Inner R.	
ORFS	Orifice Flange Set	DN	50-600		ASTM	A182-F11
STBT	Stud Bolt with Nuts		_____	Studs:	ASTM	A193-B16
				Nuts:	ASTM	A194-4

Class No.: FP02	Page: 3	Content: Piping Components

ITEM DESCRIPTION			NOMINAL PIPE SIZE 15	20	25	40	50	80	100	150	200	250	300	350	400	450	500	600
* PIPE																		
Pipe		74.33.11	*	*	*	*	*	*	*	*	*	*	*	*	*	*	*	*
* FLANGES																		
Blind Flange		76.64.10	*	*	*	*	*	*	*	*	*	*	*	*	*	*	*	*
Spectacle Blind Flange		76.88.07	*	*	*	*	*	*	*	*	*	*	*	*	*	*	*	*
Spacer Ring Type (ANS Flanges)		76.88.00	*	*	*	*	*	*	*	*	*	*	*	*	*	*	*	*
Welding Neck Flange		76.64.80	*	*	*	*	*	*	*	*	*	*	*	*	*	*	*	*
* FITTINGS																		
Cap	Butt-Weld. End	76.32.18	*	*	*	*	*	*	*	*	*	*	*	*	*	*	*	*
Elbow 45 Deg.	Butt-Weld. End	76.32.38	*	*	*	*	*	*	*	*	*	*	*	*	*	*	*	*
Elbow 90 Deg.	Butt-Weld. End	76.32.39	*	*	*	*	*	*	*	*	*	*	*	*	*	*	*	*
Equal Tee	Butt-Weld. End	76.32.84	*	*	*	*	*	*	*	*	*	*	*	*	*	*	*	*
Elbow 45 Deg.	Socket-Weld. End	76.36.38	*	*	*	*												
Elbow 90 Deg.	Socket-Weld. End	76.36.39	*	*	*	*												
Equal Tee	Socket-Weld. End	76.36.84	*	*	*	*												
Coupling	Socket-Weld. End	76.36.28	*	*	*	*												
Cap	Socket-Weld. End	76.36.18	*	*	*	*												
* VALVES																		
Check Valve Butt-Weld. End		75.59.10	*	*	*	*	*	*	*	*	*	*	*	*	*	*		
Gate Valve Butt-Weld. End		75.59.30	*	*	*	*	*	*	*	*	*	*	*	*	*	*	*	*
Globe Valve Butt-Weld. End		75.59.40	*	*	*	*	*	*	*	*								
* MISCELLANEOUS																		
Gasket, Spiral Wound		85.41.31	*	*	*	*	*	*	*	*	*	*	*	*	*	*	*	*
Orifice Flange Set		60.88.52					*	*	*	*	*	*	*	*	*	*	*	*

Class No.: FP02	Page: 4	Content: Reducing Piping Components

Run		Br.	BROB 76.80.05	RECB 76.32.72	REEB 76.32.73	TERB 76.32.85	TERS 76.36.85
20	×	15		*	*	*	*
25	×	15		*	*	*	*
25	×	20		*	*	*	*
40	×	20		*	*		*
40	×	25		*	*		*
50	×	25		*	*		
50	×	40			*	*	
80	×	40			*	*	
80	×	50	*	*	*		
100	×	50	*	*	*		
100	×	80	*	*	*		
150	×	50	*				
150	×	80	*	*	*		
150	×	100	*	*	*		
200	×	50	*				
200	×	80	*				
200	×	100	*	*	*		
200	×	150	*	*	*		
250	×	50	*				
250	×	80	*				
250	×	100	*				
250	×	150	*	*	*		
250	×	200	*	*	*		
300	×	50	*				
300	×	80	*				
300	×	100	*				
300	×	150	*	*	*		
300	×	200	*	*	*		
300	×	250	*	*	*		
350	×	50	*				
350	×	80	*				
350	×	100	*				
350	×	150	*				
350	×	200	*	*	*		
350	×	250	*	*	*		
350	×	300	*	*	*		

Run		Br.	BROB 76.80.05	RECB 76.32.72	REEB 76.32.73
400	×	50	*		
400	×	80	*		
400	×	100	*		
400	×	150	*		
400	×	200	*	*	*
400	×	250	*	*	*
400	×	300	*	*	*
400	×	350	*	*	*
450	×	50	*		
450	×	80	*		
450	×	100	*		
450	×	150	*		
450	×	200	*		
450	×	250	*		
450	×	300	*		
450	×	350	*	*	*
450	×	400	*	*	*
500	×	50	*		
500	×	80	*		
500	×	100	*		
500	×	150	*		
500	×	200	*		
500	×	250	*		
500	×	300	*	*	*
500	×	350	*	*	*
500	×	400	*	*	*
500	×	450	*	*	*
600	×	50	*		
600	×	80	*		
600	×	100	*		
600	×	150	*		
600	×	200	*		
600	×	250	*		
600	×	300	*		
600	×	350	*		
600	×	400	*		
600	×	450		*	*
600	×	500		*	*

COMP. NAME	DESCRIPTION
BROB	Branch Outlet Red. Butt-Weld
RECB	Reducer Conc. Butt-Weld. End
REEB	Reducer Ecc. Butt-Weld. End
TERB	Tee Reducing Butt-Weld. End
BROS	Branch Fitting Socket-Weld. End Outlet
TERS	Tee Reducing Socket-Weld. End

RUN	Br.	BROS 76.80.26
40-150	15	*
200-600		*
50-80	20	*
100-600		*
50	25	*
80-100		*
150-600		*
80-100	40	*
150-300		*
350-600		*

Class No.: FP02	Page: 5	Content: Bolting and Assemblies

BOLT SET FLANGED JOINTS

DN	No.	Inch		mm	81.38.96
15	4	1/2	×	80	*
20	4	5/8	×	90	*
25	4	5/8	×	90	*
40	4	3/4	×	110	*
50	8	5/8	×	110	*
80	8	3/4	×	130	*
100	8	7/8	×	150	*
150	12	1	×	170	*
200	12	11/8	×	190	*
250	16	11/4	×	220	*
300	20	11/4	×	220	*
350	20	13/8	×	240	*
400	20	11/2	×	250	*
450	20	15/8	×	280	*
500	24	15/8	×	290	*
600	24	17/8	×	330	*

BOLT SET SPECTACLE/SPACER

DN	No.	Inch		mm	81.38.96
15	4	1/2	×	90	*
20	4	5/8	×	100	*
25	4	5/8	×	100	*
40	4	3/4	×	120	*
50	8	5/8	×	120	*
80	8	3/4	×	150	*
100	8	7/8	×	170	*
150	12	1	×	210	*
200	12	11/8	×	230	*
250	16	11/4	×	260	*
300	20	11/4	×	270	*
350	20	13/8	×	290	*
400	20	11/2	×	310	*
450	20	15/8	×	340	*
500	24	15/8	×	360	*
600	24	17/8	×	415	*

BOLT SET ORIFICE FLANGES

DN	No.	Inch		mm	81.38.63
15	4	5/8	×	135	*
20	4	5/8	×	135	*
25	4	5/8	×	135	*
40	4	3/4	×	140	*
50	8	5/8	×	150	*
80	8	3/4	×	150	*
100	8	7/8	×	160	*
150	12	1	×	180	*
200	12	1-1/8	×	210	*
250	16	1-1/4	×	230	*
300	20	1-1/4	×	240	*
350	20	1-3/8	×	260	*
400	20	1-1/2	×	275	*
450	20	1-5/8	×	300	*
500	24	1-5/8	×	320	*
600	24	1-7/8	×	355	*

* DRAIN POINT Fig. 0N

Run DN 15-25	Br DN 15	No.
Branch: Table Page 1		1
Blind Flange		1
Gasket Spiral Wound		1
Gate Valve Butt Weld End		1
Pipe Nipple 50 mm		1
Stud Bolt with Nuts		4
Welding Neck Flange		1

* DRAIN POINT Fig. 0N

Run DN 40-40	Br DN 20	No.
Branch: Table Page 1		1
Blind Flange		1
Gasket Spiral Wound		1
Gate Valve Butt Weld End		1
Pipe Nipple 50 mm		1
Stud Bolt with Nuts		4
Welding Neck Flange		1

* DRAIN POINT Fig. 0N

Run DN 50-600	Br DN 20	No.
Branch: Table Page 1		1
Blind Flange		1
Gasket Spiral Wound		1
Gate Valve Butt Weld End		1
Stud Bolt with Nuts		4
Pipe Nipple 50 mm		1
Welding Neck Flange		1

* VENT POINT Fig. 1N

Run DN 15-25	Br DN 15	No.
Branch: Table Page 1		1
Blind Flange		1
Gasket Spiral Wound		1
Globe Valve Butt Weld End		1
Pipe Nipple 50 mm		1
Stud Bolt with Nuts		4
Welding Neck Flange		1

* VENT POINT Fig. 1N

Run DN 40-40	Br DN 20	No.
Branch: Table Page 1		1
Blind Flange		1
Gasket Spiral Wound		1
Globe Valve Butt Weld End		1
Pipe Nipple 50 mm		1
Stud Bolt with Nuts		4
Welding Neck Flange		1

* VENT POINT Fig. 1N

Run DN 50-600	Br DN 20	No.
Branch: Table Page 1		1
Blind Flange		1
Gasket Spiral Wound		1
Globe Valve Butt Weld End		1
Stud Bolt with Nuts		4
Pipe Nipple 50 mm		1
Welding Neck Flange		1

Class No.: FP04	Page: 1	Content: General
Base Material: Alloy Steel (5 Cr - 0.5 Mo)	First Issue: Revision:	
Rating: PN 100 (Class 600)	Date:	
Corrosion Allowance: 1 mm	Sign:	

Temperature °C		0	50	100	150	200	250	300	350	400	450
Pressure Barg.	DN 15-600	103.4	103.4	103.1	100.3	97.3	92.7	85.7	80.4	73.2	61.9

TABLE OF SCHEDULES

DN	Schedule
15	80
20	80
25	80
40	80
50	80
80	80
100	80
150	80
200	80
250	80
300	80
350	80
400	80
450	80
500	80
600	80

BRANCH CONNECTIONS 90 DEGREES

Run Size	BRANCH SIZE 15	20	25	40	50	80	100	150	200	250	300	350	400	450	500	600
600	C	C	C	C	E	E	E	E	E	E	E	E	E	E	E	A
500	C	C	C	C	E	E	E	E	E	E	E	E	E	E	A	
450	C	C	C	C	E	E	E	E	E	E	E	E	E	A		
400	C	C	C	C	E	E	E	E	E	E	E	E	A			
350	C	C	C	C	E	E	E	E	E	E	E	A				
300	C	C	C	C	E	E	E	E	E	E	A					
250	C	C	C	C	E	E	E	E	E	A						
200	C	C	C	C	E	E	E	E	A							
150	C	C	C	C	E	E	E	A								
100	C	C	C	C	E	E	A									
80	C	C	C	C	E	A										
50	C	C	C	B	A											
40	C	B	B	A												
25	B	B	A													
20	B	A														
15	A															

Notes:
- Design limits are acc. flange rating ANSI B16.5 Material Group 1.13.
- For design temperatures of 400°C and below, application of ASTM A193-B7 bolting material and asbestos filled gaskets is possible.
- Application of other types of branch connections is subject to company approval.

CODE	EXPLANATION OF CHARACTERS
A	Equal tee
B	Reducing tee
C	Branch fitting socket-weld end outlet
E	Branch outlet reducing butt-weld

Class No.: FP04	Page: 2	Content: Material Descriptions

* PIPE

PIPE	Pipe	DN	15-400	ASTM	A335-P5 (Seamless)
		DN	450-600	ASTM	A691-5CR (Welded)
PNPP	Pipe Nipple 50 mm	DN	15-40	ASTM	A335-P5 (Seamless)

* FLANGES

BLFL	Blind Flange	DN	15-600	ASTM	A182-F5
SBFL	Spectacle Blind Flange	DN	15-600	ASTM	A387-5 CL.2
SPRT	Spacer Ring Type (ANS Flanges)	DN	15-600	ASTM	A387-5 CL.2
WNFL	Welding Neck Flange	DN	15-600	ASTM	A182-F5

* FITTINGS

CAPB	Cap	Butt-Weld. End	DN	15-600	ASTM	A234-WP5
E45B	Elbow 45 Deg.	Butt-Weld. End	DN	15-600	ASTM	A234-WP5
E90B	Elbow 90 Deg.	Butt-Weld. End	DN	15-600	ASTM	A234-WP5
TEEB	Equal Tee	Butt-Weld. End	DN	15-600	ASTM	A234-WP5
E45S	Elbow 45 Deg.	Socket-Weld. End	DN	15-40	ASTM	A182-F5
E90S	Elbow 90 Deg.	Socket-Weld. End	DN	15-40	ASTM	A182-F5
TEES	Equal Tee	Socket-Weld. End	DN	15-40	ASTM	A182-F5
COUS	Coupling	Socket-Weld. End	DN	15-40	ASTM	A182-F5
CAPS	Cap	Socket-Weld. End	DN	15-40	ASTM	A182-F5

* REDUCING FITTINGS

BROS	Branch Fitting Outlet Socket-Weld. End	DN	15-40	ASTM	A182-F5
BROB	Branch Outlet Red. Butt-Weld.	DN	80-600	ASTM	A182-F5
RECB	Reducer Conc. Butt-Weld. End	DN	20-600	ASTM	A234-WP5
REEB	Reducer Ecc. Butt-Weld. End	DN	20-600	ASTM	A234-WP5
TERB	Tee Reducing Butt-Weld. End	DN	20-25	ASTM	A234-WP5
TERS	Tee Reducing Socket-Weld. End	DN	20-40	ASTM	A182-F5

Note:
- For full material description see relevant MESC buying description.
- Where both socket weld and butt weld fittings are specified, preference is subject to company approval.

* VALVES

CHVF	Check Valve Flanged	DN	15-400	Body:	ASTM	A217-C5, A182-F5
				Trim:	AISI	316, 316L
GAVF	Gate Valve Flanged	DN	15-600	Body:	ASTM	A217-C5, A182-F5
				Trim:	AISI	316, 316L
GLVF	Globe Valve Flanged	DN	15-150	Body:	ASTM	A217-C5, A182-F5
				Trim:	AISI	316, 316L

* MISCELLANEOUS

GKSW	Gasket, Spiral Wound	DN	15-600	AISI	304, Graphite Filled, CS Centring-, AISI 304 Inner-Ring	
ORFS	Orifice Flange Set	DN	50-600		ASTM	A182-F5
STBT	Stud Bolt with Nuts		____	Studs:	ASTM	A193-B16
				Nuts:	ASTM	A194-4

Class No.: FP04	Page: 3	Content: Piping Components

ITEM DESCRIPTION			NOMINAL PIPE SIZE 15	20	25	40	50	80	100	150	200	250	300	350	400	450	500	600
* PIPE																		
Pipe		74.33.31	*	*	*	*	*	*	*	*	*	*	*	*	*	*	*	*
* FLANGES																		
Blind Flange		76.64.10	*	*	*	*	*	*	*	*	*	*	*	*	*	*	*	*
Spectacle Blind Flange		76.88.07	*	*	*	*	*	*	*	*	*	*	*	*	*	*	*	*
Spacer Ring Type (ANS Flanges)		76.88.00	*	*	*	*	*	*	*	*	*	*	*	*	*	*	*	*
Welding Neck Flange		76.64.80	*	*	*	*	*	*	*	*	*	*	*	*	*	*	*	*
* FITTINGS																		
Cap	Butt-Weld. End	76.32.18	*	*	*	*	*	*	*	*	*	*	*	*	*	*	*	*
Elbow 45 Deg.	Butt-Weld. End	76.32.38	*	*	*	*	*	*	*	*	*	*	*	*	*	*	*	*
Elbow 90 Deg.	Butt-Weld. End	76.32.39	*	*	*	*	*	*	*	*	*	*	*	*	*	*	*	*
Equal Tee	Butt-Weld. End	76.32.84	*	*	*	*	*	*	*	*	*	*	*	*	*	*	*	*
Elbow 45 Deg.	Socket-Weld. End	76.36.38	*	*	*	*												
Elbow 90 Deg.	Socket-Weld. End	76.36.39	*	*	*	*												
Equal Tee	Socket-Weld. End	76.36.84	*	*	*	*												
Coupling	Socket-Weld. End	76.36.28	*	*	*	*												
Cap	Socket-Weld. End	76.36.18	*	*	*	*												
* VALVES																		
Check Valve Flanged		75.41.13	*	*	*	*	*	*	*	*	*	*	*	*	*			
Gate Valve Flanged		75.41.33	*	*	*	*	*	*	*	*	*	*	*	*	*	*	*	*
Globe Valve Flanged		75.41.42	*	*	*	*	*	*	*	*								
* MISCELLANEOUS																		
Gasket, Spiral Wound		85.41.31	*	*	*	*	*	*	*	*	*	*	*	*	*	*	*	*
Orifice Flange Set		60.88.52					*	*	*	*	*	*	*	*	*	*	*	*

Class No.:	FP04	Page:	4	Content:	Reducing Piping Components

Run		Br.	BROB 76.80.05	RECB 76.32.72	REEB 76.32.73	TERB 76.32.85	TERS 76.36.85
20	×	15		*	*	*	*
25	×	15		*	*	*	*
25	×	20		*	*	*	*
40	×	20		*	*		*
40	×	25		*	*		*
50	×	25		*	*		
50	×	40		*	*		
80	×	40		*	*		
80	×	50	*	*	*		
100	×	50	*	*	*		
100	×	80	*	*	*		
150	×	50	*				
150	×	80	*	*	*		
150	×	100	*	*	*		
200	×	50	*				
200	×	80	*				
200	×	100	*	*	*		
200	×	150	*	*	*		
250	×	50					
250	×	80	*				
250	×	100	*				
250	×	150	*	*	*		
250	×	200	*	*	*		
300	×	50	*				
300	×	80	*				
300	×	100	*				
300	×	150	*	*	*		
300	×	200	*	*	*		
300	×	250	*	*	*		
350	×	50	*				
350	×	80	*				
350	×	100	*				
350	×	150	*				
350	×	200	*	*	*		
350	×	250	*	*	*		
350	×	300	*	*	*		

Run		Br.	BROB 76.80.05	RECB 76.32.72	REEB 76.32.73
400	×	50	*		
400	×	80	*		
400	×	100	*		
400	×	150	*		
400	×	200	*	*	*
400	×	250	*	*	*
400	×	300	*	*	*
400	×	350	*	*	*
450	×	50	*		
450	×	80	*		
450	×	100	*		
450	×	150	*		
450	×	200	*		
450	×	250	*	*	*
450	×	300	*	*	*
450	×	350	*	*	*
450	×	400	*	*	*
500	×	50	*		
500	×	80	*		
500	×	100	*		
500	×	150	*		
500	×	200	*		
500	×	250	*		
500	×	300	*	*	*
500	×	350	*	*	*
500	×	400	*	*	*
500	×	450	*	*	*
600	×	50	*		
600	×	80	*		
600	×	100	*		
600	×	150	*		
600	×	200	*		
600	×	250	*		
600	×	300	*		
600	×	350	*		
600	×	400	*	*	*
600	×	450	*	*	*
600	×	500	*	*	*

COMP. NAME	DESCRIPTION
BROB	Branch Outlet Red. Butt-Weld
RECB	Reducer Conc. Butt-Weld. End
REEB	Reducer Ecc. Butt-Weld. End
TERB	Tee Reducing Butt-Weld. End
TERS	Tee Reducing Socket-Weld. End
BROS	Branch Fitting Socket-Weld. End Outlet

RUN	Br.	BROS 76.80.26
40-150	15	*
200-600		*
50-80	20	*
100-600		*
50	25	*
80-100		*
150-600		*
80-100	40	*
150-300		*
350-600		*

Class No.:	FP04	Page:	5	Content:	Bolting and Assemblies

BOLT SET FLANGED JOINTS

DN	No.	Inch		mm	81.38.96
15	4	1/2	×	75	*
20	4	5/8	×	85	*
25	4	5/8	×	90	*
40	4	3/4	×	110	*
50	8	5/8	×	110	*
80	8	3/4	×	125	*
100	8	7/8	×	145	*
150	12	1	×	170	*
200	12	11/8	×	190	*
250	16	11/4	×	215	*
300	20	11/4	×	220	*
350	20	13/8	×	235	*
400	20	11/2	×	250	*
450	20	15/8	×	275	*
500	24	15/8	×	290	*
600	24	17/8	×	330	*

BOLT SET SPECTACLE/SPACER

DN	No.	Inch		mm	81.38.96
15	4	1/2	×	90	*
20	4	5/8	×	100	*
25	4	5/8	×	100	*
40	4	3/4	×	120	*
50	8	5/8	×	120	*
80	8	3/4	×	145	*
100	8	7/8	×	170	*
150	12	1	×	205	*
200	12	11/8	×	230	*
250	16	11/4	×	255	*
300	20	11/4	×	270	*
350	20	13/8	×	285	*
400	20	11/2	×	310	*
450	20	15/8	×	340	*
500	24	15/8	×	360	*
600	24	17/8	×	415	*

BOLT SET ORIFICE FLANGES

DN	No.	Inch		mm	81.38.63
15	4	5/8	×	135	*
20	4	5/8	×	135	*
25	4	5/8	×	135	*
40	4	3/4	×	140	*
50	8	5/8	×	150	*
80	8	3/4	×	150	*
100	8	7/8	×	160	*
150	12	1	×	180	*
200	12	1-1/8	×	210	*
250	16	1-1/4	×	230	*
300	20	1-1/4	×	240	*
350	20	1-3/8	×	260	*
400	20	1-1/2	×	275	*
450	20	1-5/8	×	300	*
500	24	1-5/8	×	320	*
600	24	1-7/8	×	355	*

* DRAIN POINT Fig. 0J

Run DN 15-25	Br DN 15	No.
Branch: Table Page 1		1
Blind Flange		1
Gasket Spiral Wound		2
Gate Valve Flanged		1
Pipe Nipple 50 mm		1
Stud Bolt with Nuts		8
Welding Neck Flange		1

* DRAIN POINT Fig. 0J

Run DN 40-40	Br DN 20	No.
Branch: Table Page 1		1
Blind Flange		1
Gasket Spiral Wound		2
Gate Valve Flanged		1
Pipe Nipple 50 mm		1
Stud Bolt with Nuts		8
Welding Neck Flange		1

* DRAIN POINT Fig. 0J

Run DN 50-600	Br DN 20	No.
Branch: Table Page 1		1
Blind Flange		1
Gasket Spiral Wound		2
Gate Valve Flanged		1
Pipe Nipple 50 mm		1
Stud Bolt with Nuts		8
Welding Neck Flange		1

* VENT POINT Fig. 1J

Run DN 15-25	Br DN 15	No.
Branch: Table Page 1		1
Blind Flange		1
Gasket Spiral Wound		2
Globe Valve Flanged		1
Pipe Nipple 50 mm		1
Stud Bolt with Nuts		8
Welding Neck Flange		1

* VENT POINT Fig. 1J

Run DN 40-40	Br DN 20	No.
Branch: Table Page 1		1
Blind Flange		1
Gasket Spiral Wound		2
Globe Valve Flanged		1
Pipe Nipple 50 mm		1
Stud Bolt with Nuts		8
Welding Neck Flange		1

* VENT POINT Fig. 1J

Run DN 50-600	Br DN 20	No.
Branch: Table Page 1		1
Blind Flange		1
Gasket Spiral Wound		2
Globe Valve Flanged		1
Pipe Nipple 50 mm		1
Stud Bolt with Nuts		8
Welding Neck Flange		1

Class No.: FP06	Page: 1	Content: General
Base Material: Alloy Steel (1.25 Cr. - 0.5 Mo)	First Issue: Revision:	
Rating: PN 100 (Class 600)	Date:	
Corrosion Allowance: 1 mm	Sign:	

Temperature °C		0	50	100	150	200	250	300	350	400	450	500
Pressure Barg.	DN 15-600	103.4	102.2	97.5	92.6	90.8	88.9	84.8	80.3	73.2	67.6	55.6

TABLE OF SCHEDULES

DN	Schedule
15	80
20	80
25	80
40	80
50	80
80	80
100	80
150	80
200	80
250	80
300	80
350	80
400	80
450	80
500	80
600	80

BRANCH CONNECTIONS 90 DEGREES

Run Size	BRANCH SIZE 15	20	25	40	50	80	100	150	200	250	300	350	400	450	500	600
600	C	C	C	C	E	E	E	E	E	E	E	E	E	E	E	A
500	C	C	C	C	E	E	E	E	E	E	E	E	E	E	A	
450	C	C	C	C	E	E	E	E	E	E	E	E	E	A		
400	C	C	C	C	E	E	E	E	E	E	E	E	A			
350	C	C	C	C	E	E	E	E	E	E	E	A				
300	C	C	C	C	E	E	E	E	E	E	A					
250	C	C	C	C	E	E	E	E	E	A						
200	C	C	C	C	E	E	E	E	A							
150	C	C	C	C	E	E	E	A								
100	C	C	C	C	E	E	A									
80	C	C	C	C	E	A										
50	C	C	C	B	A											
40	C	B	B	A												
25	B	B	A													
20	B	A														
15	A															

Notes:
- Design limits are acc. flange rating ANSI B16.5 Material Group 1.9.
- Application of other types of branch connections is subject to company approval.

CODE	EXPLANATION OF CHARACTERS
A	Equal tee
B	Reducing tee
C	Branch fitting socket weld end outlet
E	Branch outlet reducing butt-weld

Class No.: FP06	Page: 2	Content: Material Descriptions

* PIPE

PIPE	Pipe	DN	15-400	ASTM	A335-P11 (Seamless)
		DN	450-600	ASTM	A691-1.25CR (welded)
PNPP	Pipe Nipple 50 mm	DN	15-40	ASTM	A335-P11 (Seamless)

* FLANGES

BLFL	Blind Flange	DN	15-600	ASTM	A182-F11
SBFL	Spectacle Blind Flange	DN	15-600	ASTM	A387-11 CL.2
SPRT	Spacer Ring Type (ANS Flanges)	DN	15-600	ASTM	A387-11 CL.2
WNFL	Welding Neck Flange	DN	15-600	ASTM	A182-F11

* FITTINGS

CAPB	Cap	Butt-Weld. End	DN	15-600	ASTM	A234-WP11
E45B	Elbow 45 Deg.	Butt-Weld. End	DN	15-600	ASTM	A234-WP11
E90B	Elbow 90 Deg.	Butt-Weld. End	DN	15-600	ASTM	A234-WP11
TEEB	Equal Tee	Butt-Weld. End	DN	15-600	ASTM	A234-WP11
E45S	Elbow 45 Deg.	Socket-Weld. End	DN	15-40	ASTM	A182-F11
E90S	Elbow 90 Deg.	Socket-Weld. End	DN	15-40	ASTM	A182-F11
TEES	Equal Tee	Socket-Weld. End	DN	15-40	ASTM	A182-F11
COUS	Coupling	Socket-Weld. End	DN	15-40	ASTM	A182-F11
CAPS	Cap	Socket-Weld. End	DN	15-40	ASTM	A182-F11

* REDUCING FITTINGS

BROS	Branch Fitting Outlet Socket-Weld. End	DN	15-40	ASTM	A182-F11
BROB	Branch Outlet Red. Butt-Weld.	DN	80-600	ASTM	A182-F11
RECB	Reducer Conc. Butt-Weld. End	DN	20-600	ASTM	A234-WP11
REEB	Reducer Ecc. Butt-Weld. End	DN	20-600	ASTM	A234-WP11
TERB	Tee Reducing Butt-Weld. End	DN	20-25	ASTM	A234-WP11
TERS	Tee Reducing Socket-Weld. End	DN	20-40	ASTM	A182-F11

Note:
- For full material description see relevant MESC buying description.
- Where both socket weld and butt weld fittings are specified, preference is subject to company approval.

* VALVES

CHVB	Check Valve Butt-Weld. End	DN	15-600	Body:	ASTM	A217-WC6, A182-F11
				Trim:	AISI	316 or Body Mat. all with Stellite-6 Facings
GAVB	Gate Valve Butt-Weld. End	DN	50-600	Body:	ASTM	A217-WC6, A182-F11
				Trim:	AISI	316 or Body Mat. all with Stellite-6 Facings
GLVB	Globe Valve Butt-Weld. End	DN	15-150	Body:	ASTM	A217-WC6, A182-F11
				Trim:	AISI	316 or Body Mat. all with Stellite-6 Facings

* MISCELLANEOUS

GKSW	Gasket, Spiral Wound	DN	15-600	AISI 316, 316L Graphited Filled CS Centring, SS Inner-Ring		
ORFS	Orifice Flange Set	DN	50-600		ASTM	A182-F11
STBT	Stud Bolt with Nuts		____	Studs:	ASTM	A193-B16
				Nuts:	ASTM	A194-8C

Class No.: FP06	Page: 3	Content: Piping Components

ITEM DESCRIPTION			NOMINAL PIPE SIZE 15	20	25	40	50	80	100	150	200	250	300	350	400	450	500	600
* PIPE																		
Pipe		74.33.11	*	*	*	*	*	*	*	*	*	*	*	*	*	*	*	*
* FLANGES																		
Blind Flange		76.64.10	*	*	*	*	*	*	*	*	*	*	*	*	*	*	*	*
Spectacle Blind Flange		76.88.07	*	*	*	*	*	*	*	*	*	*	*	*	*	*	*	*
Spacer Ring Type (ANS Flanges)		76.88.18	*	*	*	*	*	*	*	*	*	*	*	*	*	*	*	*
Welding Neck Flange		76.64.80	*	*	*	*	*	*	*	*	*	*	*	*	*	*	*	*
* FITTINGS																		
Cap	Butt-Weld. End	76.32.18	*	*	*	*	*	*	*	*	*	*	*	*	*	*	*	*
Elbow 45 Deg.	Butt-Weld. End	76.32.38	*	*	*	*	*	*	*	*	*	*	*	*	*	*	*	*
Elbow 90 Deg.	Butt-Weld. End	76.32.39	*	*	*	*	*	*	*	*	*	*	*	*	*	*	*	*
Equal Tee	Butt-Weld. End	76.32.84	*	*	*	*	*	*	*	*	*	*	*	*	*	*	*	*
Elbow 45 Deg.	Socket-Weld. End	76.36.38	*	*	*	*												
Elbow 90 Deg.	Socket-Weld. End	76.36.39	*	*	*	*												
Equal Tee	Socket-Weld. End	76.36.84	*	*	*	*												
Coupling	Socket-Weld. End	76.36.28	*	*	*	*												
Cap	Socket-Weld. End	76.36.18	*	*	*	*												
* VALVES																		
Check Valve Butt-Weld. End		75.59.10	*	*	*	*	*	*	*	*	*	*	*	*	*	*	*	*
Gate Valve Butt-Weld. End		75.59.30				*	*	*	*	*	*	*	*	*	*	*	*	
Globe Valve Butt-Weld. End		75.59.40	*	*	*	*	*	*	*	*								
* MISCELLANEOUS																		
Gasket, Spiral Wound		85.41.36	*	*	*	*	*	*	*	*	*	*	*	*	*	*	*	*
Orifice Flange Set		60.88.52					*	*	*	*	*	*	*	*	*	*	*	*

Class No.:	FP06	Page:	4	Content:	Reducing Piping Components

Run		Br.	BROB 76.80.05	RECB 76.32.72	REEB 76.32.73	TERB 76.32.85	TERS 76.36.85
20	×	15		*	*	*	*
25	×	15		*	*	*	*
25	×	20		*	*	*	*
40	×	20		*	*		*
40	×	25		*	*		*
50	×	25		*	*		
50	×	40		*	*		
80	×	40		*	*		
80	×	50	*	*	*		
100	×	50	*	*	*		
100	×	80	*	*	*		
150	×	50	*				
150	×	80	*	*	*		
150	×	100	*	*	*		
200	×	50	*				
200	×	80	*				
200	×	100	*	*	*		
200	×	150	*	*	*		
250	×	50	*				
250	×	80	*				
250	×	100	*				
250	×	150	*	*	*		
250	×	200	*	*	*		
300	×	50	*				
300	×	80	*				
300	×	100	*				
300	×	150	*	*	*		
300	×	200	*	*	*		
300	×	250	*	*	*		
350	×	50	*				
350	×	80	*				
350	×	100	*				
350	×	150	*				
350	×	200	*	*	*		
350	×	250	*	*	*		
350	×	300	*	*	*		

Run		Br.	BROB 76.80.05	RECB 76.32.72	REEB 76.32.73
00	×	50	*		
400	×	80	*		
400	×	100	*		
400	×	150	*		
400	×	200	*	*	*
400	×	250	*	*	*
400	×	300	*	*	*
400	×	350	*	*	*
450	×	100			
450	×	150			
450	×	200	*	*	*
450	×	250	*	*	*
450	×	300	*	*	*
450	×	350	*	*	*
450	×	400	*	*	*
500	×	50			
500	×	80			
500	×	100			
500	×	150			
500	×	200	*	*	*
500	×	250	*	*	*
500	×	300	*	*	*
500	×	350	*	*	*
500	×	400	*	*	*
500	×	450	*	*	*
600	×	50			
600	×	80			
600	×	100			
600	×	150			
600	×	200			
600	×	250	*	*	*
600	×	300	*	*	*
600	×	350	*	*	*
600	×	400	*	*	*
600	×	450	*	*	*
600	×	500	*	*	*

COMP. NAME	DESCRIPTION
BROB	Branch Outlet Red. Butt-Weld
RECB	Reducer Conc. Butt-Weld. End
REEB	Reducer Ecc. Butt-Weld. End
TERB	Tee Reducing Butt-Weld. End
TERS	Tee Reducing Socket-Weld. End
BROS	Branch Fitting Socket-Weld. End Outlet

RUN	Br.	BROS 76.80.26
40-150	15	*
200-600		*
50-80	20	*
100-600		*
50	25	*
80-100		*
150-600		*
80-100	40	*
150-300		*
350-600		*

Class No.:	FP06	Page:	5	Content:	Bolting and Assemblies

BOLT SET FLANGED JOINTS

DN	No.	Inch		mm	81.38.96
15	4	1/2	×	80	*
20	4	5/8	×	90	*
25	4	5/8	×	90	*
40	4	3/4	×	110	*
50	8	5/8	×	110	*
80	8	3/4	×	130	*
100	8	7/8	×	150	*
150	12	1	×	170	*
200	12	11/8	×	190	*
250	16	11/4	×	220	*
300	20	11/4	×	220	*
350	20	13/8	×	240	*
400	20	11/2	×	250	*
450	20	15/8	×	280	*
500	24	15/8	×	290	*
600	24	17/8	×	330	*

BOLT SET SPECTACLE/SPACER

DN	No.	Inch		mm	81.38.96
15	4	1/2	×	90	*
20	4	5/8	×	100	*
25	4	5/8	×	100	*
40	4	3/4	×	120	*
50	8	5/8	×	120	*
80	8	3/4	×	150	*
100	8	7/8	×	170	*
150	12	1	×	210	*
200	12	11/8	×	230	*
250	16	11/4	×	260	*
300	20	11/4	×	270	*
350	20	13/8	×	290	*
400	20	11/2	×	310	*
450	20	15/8	×	340	*
500	24	15/8	×	360	*
600	24	17/8	×	415	*

BOLT SET ORIFICE FLANGES

DN	No.	Inch		mm	81.38.63
15	4	5/8	×	135	*
20	4	5/8	×	135	*
25	4	5/8	×	135	*
40	4	3/4	×	140	*
50	8	5/8	×	150	*
80	8	3/4	×	150	*
100	8	7/8	×	160	*
150	12	1	×	180	*
200	12	1-1/8	×	210	*
250	16	1-1/4	×	230	*
300	20	1-1/4	×	240	*
350	20	1-3/8	×	260	*
400	20	1-1/2	×	275	*
450	20	1-5/8	×	300	*
500	24	1-5/8	×	320	*
600	24	1-7/8	×	355	*

* DRAIN POINT Fig. 0N

Run DN 15-25	Br DN 15	No.
Branch: Table Page 1		1
Blind Flange		1
Gasket Spiral Wound		1
Gate Valve Butt-Weld. End		1
Pipe Nipple 50 mm		1
Stud Bolt with Nuts		4
Welding Neck Flange		1

* DRAIN POINT Fig. 0N

Run DN 40-40	Br DN 20	No.
Branch: Table Page 1		1
Blind Flange		1
Gasket Spiral Wound		1
Gate Valve Butt-Weld. End		1
Pipe Nipple 50 mm		1
Stud Bolt with Nuts		4
Welding Neck Flange		1

* DRAIN POINT Fig. 0N

Run DN 50-600	Br DN 20	No.
Branch: Table Page 1		1
Blind Flange		1
Gasket Spiral Wound		1
Gate Valve Butt-Weld. End		1
Pipe Nipple 50 mm		1
Stud Bolt with Nuts		4
Welding Neck Flange		1

* VENT POINT Fig. 1N

Run DN 15-25	Br DN 15	No.
Branch: Table Page 1		1
Blind Flange		1
Gasket Spiral Wound		1
Globe Valve Butt-Weld. End		1
Pipe Nipple 50 mm		1
Stud Bolt with Nuts		4
Welding Neck Flange		1

* VENT POINT Fig. 1N

Run DN 40-40	Br DN 20	No.
Branch: Table Page 1		1
Blind Flange		1
Gasket Spiral Wound		1
Globe Valve Butt-Weld. End		1
Pipe Nipple 50 mm		1
Stud Bolt with Nuts		4
Welding Neck Flange		1

* VENT POINT Fig. 1N

Run DN 50-600	Br DN 20	No.
Branch: Table Page 1		1
Blind Flange		1
Gasket Spiral Wound		1
Globe Valve Butt-Weld. End		1
Pipe Nipple 50 mm		1
Stud Bolt with Nuts		4
Welding Neck Flange		1

Class No.: FS02	Page: 1	Content: General
Base Material: Stainless Steel (AISI 316)	First Issue: Revision:	
Rating: PN 100 (Class 600)	Date:	
Corrosion Allowance: 0 mm	Sign:	

Temperature °C		0	50	100	150	200	250	300	350	400
Pressure Barg.	DN 15-200	99.2	96.2	84.5	77.0	71.5	66.7	63.3	60.9	58.2

TABLE OF SCHEDULES

DN	Schedule
15	40S
20	40S
25	40S
40	40S
50	40S
80	40S
100	40S
150	80S
200	80S

BRANCH CONNECTIONS 90 DEGREES

Run Size	BRANCH SIZE 15	20	25	40	50	80	100	150	200
200	C	C	C	C	E	E	E	E	A
150	C	C	C	C	E	E	E	A	
100	C	C	C	C	E	E	A		
80	C	C	C	C	E	A			
50	C	C	C	B	A				
40	C	B	B	A					
25	B	B	A						
20	B	A							
15	A								

Notes:
- Design limits are acc. flange rating ANSI B16.5 Material Group 2.2
- Blind flanges to be provided with liner
- Application of other types of branch connections is subject to company approval.

CODE	EXPLANATION OF CHARACTERS
A	Equal tee
B	Reducing tee
C	Branch fitting socket weld end outlet
E	Branch outlet reducing butt-weld

Class No.: FS02	Page: 2	Content: Material Descriptions

* PIPE

PIPE	Pipe	DN	15-200 (Seamless or Welded)	ASTM	A312-TP316L
PNPP	Pipe Nipple 50 mm	DN	15-40 (Seamless)	ASTM	A312-TP316L

* FLANGES

BLFL	Blind Flange	DN	15-200	ASTM	A182-F316
FLIN	Blind Flange Liner	DN	15-200	ASTM	A240-TP316
SBFL	Spectacle Blind Flange	DN	15-200	ASTM	A240-TP316
SPRT	Spacer Ring Type (ANS Flanges)	DN	15-200	ASTM	A240-TP316
WNFL	Welding Neck Flange	DN	15-200	ASTM	A182-F316

* FITTINGS

CAPB	Cap	Butt-Weld. End	DN	15-200	ASTM	A403-WP316L
E45B	Elbow 45 Deg.	Butt-Weld. End	DN	15-200	ASTM	A403-WP316L
E90B	Elbow 90 Deg.	Butt-Weld. End	DN	15-200	ASTM	A403-WP316L
TEEB	Equal Tee	Butt-Weld. End	DN	15-200	ASTM	A403-WP316L
E45S	Elbow 45 Deg.	Socket-Weld. End	DN	15-40	ASTM	A182-F316
E90S	Elbow 90 Deg.	Socket-Weld. End	DN	15-40	ASTM	A182-F316
TEES	Equal Tee	Socket-Weld. End	DN	15-40	ASTM	A182-F316
COUS	Coupling	Socket-Weld. End	DN	15-40	ASTM	A182-F316
CAPS	Cap	Socket-Weld. End	DN	15-40	ASTM	A182-F316

* REDUCING FITTINGS

BROS	Branch Fitting Outlet Socket-Weld. End	DN	15-40	ASTM	A182-F316
BROB	Branch Outlet Red. Butt-Weld.	DN	80-200	ASTM	A182-F316
RECB	Reducer Conc. Butt-Weld. End	DN	20-200	ASTM	A403-WP316L
REEB	Reducer Ecc. Butt-Weld. End	DN	20-200	ASTM	A403-WP316L
TERB	Tee Reducing Butt-Weld. End	DN	20-200	ASTM	A403-WP316L
TERS	Tee Reducing Socket-Weld. End	DN	20-40	ASTM	A182-F316

* VALVES

CHVF	Check Valve Flanged	DN	15-200	Body:	ASTM	A351-CF8M, A182-F316
				Trim:	AISI	316, 316L
GAVF	Gate Valve Flanged	DN	15-200	Body:	ASTM	A351-CF8M, A182-F316
				Trim:	AISI	316, 316L
GLVF	Globe Valve Flanged	DN	15-150	Body:	ASTM	A351-CF8M, A182-F316
				Trim:	AISI	316, 316L

* MISCELLANEOUS

GKSW	Gasket, Spiral Wound	DN	15-200	AISI	316, 316L, Graphite Filled CS Centring-, SS Inner-Ring	
ORFS	Orifice Flange Set	DN	50-200		ASTM	A182-F316
STBT	Stud Bolt with Nuts		_____		Studs: ASTM	A193-B7
					Nuts: ASTM	A194-2H

Note:
- For full material description see relevant MESC buying description.
- Where both socket weld and butt weld fittings are specified, preference is subject to company approval.

Class No.: FS02	Page: 3	Content: Piping Components

ITEM DESCRIPTION			NOMINAL PIPE SIZE 15	20	25	40	50	80	100	150	200
* PIPE											
Pipe		74.36.40	*	*	*	*	*	*	*	*	*
* FLANGES											
Blind Flange		76.65.11	*	*	*	*	*	*	*	*	*
Blind Flange Liner		76.80.00	*	*	*	*	*	*	*	*	*
Spectacle Blind Flange		76.88.07	*	*	*	*	*	*	*	*	*
Spacer Ring Type (ANS Flanges)		76.88.00	*	*	*	*	*	*	*	*	*
Welding Neck Flange		76.65.80	*	*	*	*	*	*	*	*	*
* FITTINGS											
Cap	Butt-Weld. End	76.33.18	*	*	*	*	*	*	*	*	*
Elbow 45 Deg.	Butt-Weld. End	76.33.38	*	*	*	*	*	*	*	*	*
Elbow 90 Deg.	Butt-Weld. End	76.33.40	*	*	*	*	*	*	*	*	*
Equal Tee	Butt-Weld. End	76.33.84	*	*	*	*	*	*	*	*	*
Elbow 45 Deg.	Socket-Weld. End	76.37.38	*	*	*	*					
Elbow 90 Deg.	Socket-Weld. End	76.37.39	*	*	*	*					
Equal Tee	Socket-Weld. End	76.37.84	*	*	*	*					
Coupling	Socket-Weld. End	76.37.28	*	*	*	*					
Cap	Socket-Weld. End	76.37.18	*	*	*	*					
* VALVES											
Check Valve Flanged		75.40.13	*	*	*	*	*	*	*	*	*
Gate Valve Flanged		75.40.30	*	*	*	*	*	*	*	*	*
Globe Valve Flanged		75.40.41	*	*	*	*	*	*	*	*	
* MISCELLANEOUS											
Gasket, Spiral Wound		85.41.35	*	*	*	*	*	*	*	*	*
Orifice Flange Set		60.88.52					*	*	*	*	*

Class No.: FS02	Page: 4	Content: Reducing Piping Components

Run		Br.	BROB 76.80.05	RECB 76.33.72	REEB 76.33.73	TERB 76.33.85	TERS 76.37.85
20	×	15		*	*	*	*
25	×	15		*	*	*	*
25	×	20		*	*	*	*
40	×	15				*	*
40	×	20		*	*	*	*
40	×	25		*	*	*	*
50	×	25		*	*		
50	×	40		*	*	*	
80	×	40		*	*		
80	×	50	*	*	*	*	
100	×	40				*	
100	×	50	*	*	*	*	
100	×	80	*	*	*	*	
150	×	50	*				
150	×	80	*	*	*	*	
150	×	100	*	*	*	*	
200	×	50	*				
200	×	80	*				
200	×	100	*	*	*	*	
200	×	150	*	*	*	*	

COMP. NAME	DESCRIPTION
BROB	Branch Outlet Red. Butt-Weld
RECB	Reducer Conc. Butt-Weld. End
REEB	Reducer Ecc. Butt-Weld. End
TERB	Tee Reducing Butt-Weld. End
TERS	Tee Reducing Socket-Weld. End
BROS	Branch Fitting Socket-Weld. End Outlet

RUN	Br.	BROS 76.80.26
40-150	15	*
200		*
50-80	20	*
100-200		*
50	25	*
80-100		*
150-200		*
80-100	40	*
150-200		*

Class No.: FS02	Page: 5	Content: Bolting and Assemblies

BOLT SET FLANGED JOINTS

DN	No.	Inch		mm	81.38.61
15	4	1/2	×	80	*
20	4	5/8	×	90	*
25	4	5/8	×	90	*
40	4	3/4	×	110	*
50	8	5/8	×	110	*
80	8	3/4	×	130	*
100	8	7/8	×	150	*
150	12	1	×	170	*
200	12	11/8	×	190	*

BOLT SET SPECTACLE/SPACER

DN	No.	Inch		mm	81.38.61
15	4	1/2	×	90	*
20	4	5/8	×	100	*
25	4	5/8	×	100	*
40	4	3/4	×	120	*
50	8	5/8	×	120	*
80	8	3/4	×	150	*
100	8	7/8	×	170	*
150	12	1	×	210	*
200	12	11/8	×	230	*

BOLT SET ORIFICE FLANGES

DN	No.	Inch		mm	81.38.63
15	4	5/8	×	135	*
20	4	5/8	×	135	*
25	4	5/8	×	135	*
40	4	3/4	×	140	*
50	8	5/8	×	150	*
80	8	3/4	×	150	*
100	8	7/8	×	160	*
150	12	1	×	180	*
200	12	1-1/8	×	210	*

* DRAIN POINT Fig. 0I

Run DN 15-25	Br DN 15	No.
Branch: Table Page 1		1
Blind Flange		1
Gasket Spiral Wound		2
Gate Valve Flanged		1
Stud Bolt with Nuts		8
Welding Neck Flange		1

* DRAIN POINT Fig. 0I

Run DN 40-40	Br DN 20	No.
Branch: Table Page 1		1
Blind Flange		1
Gasket Spiral Wound		2
Gate Valve Flanged		1
Stud Bolt with Nuts		8
Welding Neck Flange		1

* DRAIN POINT Fig. 0J

Run DN 50-200	Br DN 20	No.
Branch: Table Page 1		1
Blind Flange		1
Gasket Spiral Wound		2
Gate Valve Flanged		1
Pipe Nipple 50 mm		1
Stud Bolt with Nuts		8
Welding Neck Flange		1

* VENT POINT Fig. 1I

Run DN 15-25	Br DN 15	No.
Branch: Table Page 1		1
Blind Flange		1
Gasket Spiral Wound		2
Globe Valve Flanged		1
Stud Bolt with Nuts		8
Welding Neck Flange		1

* VENT POINT Fig. 1I

Run DN 40-40	Br DN 20	No.
Branch: Table Page 1		1
Blind Flange		1
Gasket Spiral Wound		2
Globe Valve Flanged		1
Stud Bolt with Nuts		8
Welding Neck Flange		1

* VENT POINT Fig. 1J

Run DN 50-200	Br DN 20	No.
Branch: Table Page 1		1
Blind Flange		1
Gasket Spiral Wound		2
Globe Valve Flanged		1
Pipe Nipple 50 mm		1
Stud Bolt with Nuts		8
Welding Neck Flange		1

Class No.: FS04	Page: 1	Content: General
Base Material: Stainless Steel (AISI 304, LT)	First Issue: Revision:	
Rating: PN 100 (Class 600)	Date:	
Corrosion Allowance: 0 mm	Sign:	

Temperature °C		-200	0	50	100	125	150
Pressure Barg.	DN 15-600	93.1	93.1	89.6	76.3	72.7	69.2

TABLE OF SCHEDULES

DN	Schedule
15	40S
20	40S
25	40S
40	40S
50	40S
80	40S
100	40S
150	40S
200	80S
250	80S
300	60
350	60
400	60
450	60
500	60
600	60

BRANCH CONNECTIONS 90 DEGREES

Run Size	BRANCH SIZE 15	20	25	40	50	80	100	150	200	250	300	350	400	450	500	600
600	C	C	C	C	E	E	E	E	E	E	E	E	E	E	E	A
500	C	C	C	C	E	E	E	E	E	E	E	E	E	E	A	
450	C	C	C	C	E	E	E	E	E	E	E	E	E	A		
400	C	C	C	C	E	E	E	E	E	E	E	E	A			
350	C	C	C	C	E	E	E	E	E	E	E	A				
300	C	C	C	C	E	E	E	E	E	E	A					
250	C	C	C	C	E	E	E	E	E	A						
200	C	C	C	C	E	E	E	E	A							
150	C	C	C	C	E	E	E	A								
100	C	C	C	C	E	E	A									
80	C	C	C	C	E	A										
50	C	C	C	B	A											
40	C	B	B	A												
25	B	B	A													
20	B	A														
15	A															

Notes:
- Design limits are based on bolting material.Blind flanges to be provided with liner
- Piston type check valves for horizontal mounting only.
- Application of other types of branch connections is subject to company approval.

CODE	EXPLANATION OF CHARACTERS
A	Equal tee
B	Reducing tee
C	Branch fitting socket weld end outlet
E	Branch outlet reducing butt-weld

Class No.: FS04	Page: 2	Content: Material Descriptions

* PIPE

PIPE	Pipe	DN	15-600	ASTM	A312-TP304 (Seamless or Welded)
PNPP	Pipe Nipple 50 mm	DN	15-40	ASTM	A312-TP304 (Seamless)

* FLANGES

SBFL	Spectacle Blind Flange	DN	15-600	ASTM	A240-TP304
SPRT	Spacer Ring Type (ANS Flanges)	DN	15-600	ASTM	A240-TP304
WNFL	Welding Neck Flange	DN	15-600	ASTM	A182-F304

* FITTINGS

CAPB	Cap	Butt-Weld. End	DN	15-600	ASTM	A403-WP304
E45B	Elbow 45 Deg.	Butt-Weld. End	DN	15-600	ASTM	A403-WP304
E90B	Elbow 90 Deg.	Butt-Weld. End	DN	15-600	ASTM	A403-WP304
TEEB	Equal Tee	Butt-Weld. End	DN	15-600	ASTM	A403-WP304
E45S	Elbow 45 Deg.	Socket-Weld. End	DN	15-40	ASTM	A182-F304
E90S	Elbow 90 Deg.	Socket-Weld. End	DN	15-40	ASTM	A182-F304
TEES	Equal Tee	Socket-Weld. End	DN	15-40	ASTM	A182-F304
COUS	Coupling	Socket-Weld. End	DN	15-40	ASTM	A182-F304
CAPS	Cap	Socket-Weld. End	DN	15-40	ASTM	A182-F304

* REDUCING FITTINGS

BROS	Branch Fitting Outlet Socket-Weld. End	DN	15-40	ASTM	A182-F304
BROB	Branch Outlet Red. Butt-Weld.	DN	80-600	ASTM	A182-F304
RECB	Reducer Conc. Butt-Weld. End	DN	20-600	ASTM	A403-WP304
REEB	Reducer Ecc. Butt-Weld. End	DN	20-600	ASTM	A403-WP304
TERS	Tee Reducing Socket-Weld. End	DN	20-40	ASTM	A182-F304

Note:
- For full material description see relevant MESC buying description.
- Where both socket weld and butt weld fittings are specified, preference is subject to company approval.

* VALVES

CHVF	Check Valve Flanged	DN	15-600	Body:	ASTM	A351-CF8M, A182-F316
				Trim:	AISI	316, 316L
GAVF	Gate Valve Flanged	DN	15-600	Body:	ASTM	A351-CF8M, A182-F316
				Trim:	AISI	316, 316L
GLVF	Globe Valve Flanged	DN	15-150	Body:	ASTM	A351-CF8M, A182-F316
				Trim:	AISI	316, 316L

* MISCELLANEOUS

GKSW	Gasket, Spiral Wound	DN	15-600	AISI	316, 316L, Asbestos Filled CS Centring Ring	
ORFS	Orifice Flange Set	DN	50-600		ASTM	A182-F304
STBT	Stud Bolt with Nuts			Bolts (Dia. > 1½") ASTM A193B8M2,		
				Nuts:	ASTM	A194 Gr. 8M
			___	Studs:	ASTM	A193-B8
				Nuts:	ASTM	A194-8

Class No.: FS04	Page: 3	Content: Piping Components

ITEM DESCRIPTION			NOMINAL PIPE SIZE 15	20	25	40	50	80	100	150	200	250	300	350	400	450	500	600
* PIPE																		
Pipe		74.36.10	*	*	*	*	*	*	*	*	*	*	*	*	*	*	*	*
* FLANGES																		
Spectacle Blind Flange		76.88.07	*	*	*	*	*	*	*	*	*	*	*	*	*	*	*	*
Spacer Ring Type (ANS Flanges)		76.88.09	*	*	*	*	*	*	*	*	*	*	*	*	*	*	*	*
Welding Neck Flange		76.65.80	*	*	*	*	*	*	*	*	*	*	*	*	*	*	*	*
* FITTINGS																		
Cap	Butt-Weld. End	76.33.18	*	*	*	*	*	*	*	*	*	*	*	*	*	*	*	*
Elbow 45 Deg.	Butt-Weld. End	76.33.38	*	*	*	*	*	*	*	*	*	*	*	*	*	*	*	*
Elbow 90 Deg.	Butt-Weld. End	76.33.40	*	*	*	*	*	*	*	*	*	*	*	*	*	*	*	*
Equal Tee	Butt-Weld. End	76.33.84	*	*	*	*	*	*	*	*	*	*	*	*	*	*	*	*
Elbow 45 Deg.	Socket-Weld. End	76.37.38	*	*	*	*												
Elbow 90 Deg.	Socket-Weld. End	76.37.39	*	*	*	*												
Equal Tee	Socket-Weld. End	76.37.84	*	*	*	*												
Coupling	Socket-Weld. End	76.37.28	*	*	*	*												
Cap	Socket-Weld. End	76.37.18	*	*	*	*												
* VALVES																		
Check Valve Flanged		75.40.13	*	*	*	*	*	*	*	*	*	*	*	*	*	*	*	*
Gate Valve Flanged		75.40.30	*	*	*	*	*	*	*	*	*	*	*	*	*	*	*	*
Globe Valve Flanged		75.40.41	*	*	*	*	*	*	*	*								
* MISCELLANEOUS																		
Gasket, Spiral Wound		85.41.35	*	*	*	*	*	*	*	*	*	*	*	*	*	*	*	*
Orifice Flange Set		60.88.52					*	*	*	*	*	*	*	*	*	*	*	*

Class No.:	FS04	Page:	4	Content:	Reducing Piping Components

Run		Br.	BROB 76.80.05	RECB 76.33.71	REEB 76.33.73	TERB 76.33.85	TERS 76.37.85
20	×	15		*	*	*	*
25	×	15		*	*	*	*
25	×	20		*	*	*	*
40	×	15		*		*	*
40	×	20		*	*	*	*
40	×	25		*	*	*	*
50	×	25		*	*	*	
50	×	40		*	*	*	
80	×	40		*	*	*	
80	×	50	*	*	*		
100	×	50	*		*	*	
100	×	80	*	*	*	*	
150	×	50	*				
150	×	80	*	*	*	*	
150	×	100	*	*	*	*	
200	×	50	*				
200	×	80	*				
200	×	100	*			*	
200	×	150	*		*	*	
250	×	50	*		*		
250	×	80	*				
250	×	100	*				
250	×	150	*	*	*	*	
250	×	200	*	*	*		
300	×	50	*				
300	×	80	*				
300	×	100	*				
300	×	150	*	*	*	*	
300	×	200	*				
300	×	250	*				
350	×	50	*				
350	×	80	*				
350	×	100	*				
350	×	150	*	*	*	*	
350	×	200	*				
350	×	250	*				
350	×	300	*	*	*	*	

Run		Br.	BROB 76.80.05	RECB 76.36.71	REEB 76.36.73	TERB 76.33.85
400	×	50	*			
400	×	80	*			
400	×	100	*			
400	×	150	*			*
400	×	200	*			
400	×	250	*			
400	×	300	*	*	*	*
400	×	350	*	*	*	*
450	×	50	*			
450	×	80	*			
450	×	100	*			
450	×	150	*			
450	×	200	*			
450	×	250	*			
450	×	300	*	*	*	*
450	×	350	*	*	*	*
450	×	400	*	*	*	*
500	×	50	*			
500	×	80	*			
500	×	100	*			
500	×	150	*			
500	×	200	*			
500	×	250	*			
500	×	300	*	*	*	*
500	×	350	*	*	*	*
500	×	400	*	*	*	*
500	×	450	*	*	*	*
600	×	50	*			
600	×	80	*			
600	×	100	*			
600	×	150	*			
600	×	200	*			
600	×	250	*			
600	×	300	*			*
600	×	350	*			*
600	×	400	*	*	*	*
600	×	450	*	*	*	*
600	×	500	*	*	*	*

COMP. NAME	DESCRIPTION
BROB	Branch Outlet Red. Butt-Weld
RECB	Reducer Conc. Butt-Weld. End
REEB	Reducer Ecc. Butt-Weld. End
TERB	Tee Reducing Butt-Weld. End
TERS	Tee Reducing Socket-Weld. End
BROS	Branch Fitting Socket-Weld. End Outlet

RUN	Br.	BROS 76.80.26
40-150	15	*
200-600		*
50-80	20	*
100-600		*
50	25	*
80-100		*
150-600		*
80-100	40	*
150-300		*
350-600		*

Class No.:	FS04	Page:	5	Content:	Bolting and Assemblies

BOLT SET FLANGED JOINTS

DN	No.	Inch		mm	81.38.43
15	4	1/2	×	80	*
20	4	5/8	×	90	*
25	4	5/8	×	90	*
40	4	3/4	×	110	*
50	8	5/8	×	110	*
80	8	3/4	×	130	*
100	8	7/8	×	150	*
150	12	1	×	170	*
200	12	11/8	×	190	*
250	16	11/4	×	220	*
300	20	11/4	×	220	*
350	20	13/8	×	240	*
400	20	11/2	×	250	*
450	20	15/8	×	280	*
500	24	15/8	×	290	*
600	24	17/8	×	330	*

BOLT SET SPECTACLE/SPACER

DN	No.	Inch		mm	81.38.43
15	4	1/2	×	90	*
20	4	5/8	×	100	*
25	4	5/8	×	100	*
40	4	3/4	×	120	*
50	8	5/8	×	120	*
80	8	3/4	×	150	*
100	8	7/8	×	170	*
150	12	1	×	210	*
200	12	11/8	×	230	*
250	16	11/4	×	260	*
300	20	11/4	×	270	*
350	20	13/8	×	290	*
400	20	11/2	×	310	*
450	20	15/8	×	340	*
500	24	15/8	×	360	*
600	24	17/8	×	415	*

BOLT SET ORIFICE FLANGES

DN	No.	Inch		mm	81.38.63
15	4	5/8	×	135	*
20	4	5/8	×	135	*
25	4	5/8	×	135	*
40	4	3/4	×	140	*
50	8	5/8	×	150	*
80	8	3/4	×	150	*
100	8	7/8	×	160	*
150	12	1	×	180	*
200	12	1-1/8	×	210	*
250	16	1-1/4	×	230	*
300	20	1-1/4	×	240	*
350	20	1-3/8	×	260	*
400	20	1-1/2	×	275	*
450	20	1-5/8	×	300	*
500	24	1-5/8	×	320	*
600	24	1-7/8	×	355	*

* DRAIN POINT Fig. 0J

Run DN 15-25	Br DN 15	No.
Branch: Table Page 1		1
Gasket Spiral Wound		2
Gate Valve Flanged		1
Pipe Nipple 50 mm		1
Stud Bolt with Nuts		8
Welding Neck Flange		1

* DRAIN POINT Fig. 0J

Run DN 40-40	Br DN 20	No.
Branch: Table Page 1		1
Gasket Spiral Wound		2
Gate Valve Flanged		1
Pipe Nipple 50 mm		1
Stud Bolt with Nuts		8
Welding Neck Flange		1

* DRAIN POINT Fig. 0J

Run DN 50-600	Br DN 20	No.
Branch: Table Page 1		1
Gasket Spiral Wound		2
Gate Valve Flanged		1
Pipe Nipple 50 mm		1
Stud Bolt with Nuts		8
Welding Neck Flange		1

* VENT POINT Fig. 1J

Run DN 15-25	Br DN 15	No.
Branch: Table Page 1		1
Gasket Spiral Wound		2
Globe Valve Flanged		1
Pipe Nipple 50 mm		1
Stud Bolt with Nuts		8
Welding Neck Flange		1

* VENT POINT Fig. 1J

Run DN 40-40	Br DN 20	No.
Branch: Table Page 1		1
Gasket Spiral Wound		2
Globe Valve Flanged		1
Pipe Nipple 50 mm		1
Stud Bolt with Nuts		8
Welding Neck Flange		1

* VENT POINT Fig. 1J

Run DN 50-600	Br DN 20	No.
Branch: Table Page 1		1
Gasket Spiral Wound		2
Globe Valve Flanged		1
Pipe Nipple 50 mm		1
Stud Bolt with Nuts		8
Welding Neck Flange		1

Base Material: Stainless Steel (AISI 321/347)	First Issue:	Revision:	
Rating: PN 100 (Class 600)		Date:	
Corrosion Allowance: 0 mm		Sign:	

Temperature °C		0	50	100	150	200	250	300	350	400	450
Pressure Barg.	DN 15-150	99.2	95.9	83.0	75.0	68.8	64.0	61.1	58.7	57.2	56.3
	DN 200-	92.5	92.5	83.0	75.0	68.8	64.0	61.1	58.7	57.2	56.3
	DN 250-	83.9	83.9	83.0	75.0	68.8	64.0	61.1	58.7	57.2	56.3
	DN 300-	72.5	72.5	72.5	72.4	67.8	63.5	60.3	58.0	56.8	55.5

TABLE OF SCHEDULES

DN	Schedule
15	40S
20	40S
25	40S
40	40S
50	40S
80	40S
100	40S
150	40S
200	40S
250	40S
300	40S

BRANCH CONNECTIONS 90 DEGREES

Run Size	BRANCH SIZE 15	20	25	40	50	80	100	150	200	250	300
300	C	C	C	C	E	E	E	E	E	E	A
250	C	C	C	C	E	E	E	E	E	A	
200	C	C	C	C	E	E	E	E	A		
150	C	C	C	C	E	E	E	A			
100	C	C	C	C	E	E	A				
80	C	C	C	C	E	A					
50	C	C	C	B	A						
40	C	B	B	A							
25	B	B	A								
20	B	A									
15	A										

Notes:

- Design limits are acc. flange rating ANSI B16.5 Material Group 2.4 and to allowable internal pressure acc. ANSI B31.3.
- Application of other types of branch connections is subject to company approval.

CODE	EXPLANATION OF CHARACTERS
A	Equal tee
B	Reducing tee
C	Branch fitting socket weld end outlet
E	Branch outlet reducing butt-weld

Class No.: FS06	Page: 2	Content: Material Descriptions

* PIPE

PIPE	Pipe	DN	15-300 (Seamless or Welded)	ASTM	A312-TP321/347
PNPP	Pipe Nipple 50 mm	DN	15-40 (Seamless)	ASTM	A312-TP321/347

* FLANGES

BLFL	Blind Flange	DN	15-300	ASTM	A182-F321/347
SBFL	Spectacle Blind Flange	DN	15-300	ASTM	A240-TP321/347
SPRT	Spacer Ring Type (ANS Flanges)	DN	15-300	ASTM	A240-TP321/347
WNFL	Welding Neck Flange	DN	15-300	ASTM	A182-F321/347

* FITTINGS

CAPB	Cap	Butt-Weld. End	DN	15-300	ASTM	A403-WP321/347
E45B	Elbow 45 Deg.	Butt-Weld. End	DN	15-300	ASTM	A403-WP321/347
E90B	Elbow 90 Deg.	Butt-Weld. End	DN	15-300	ASTM	A403-WP321/347
TEEB	Equal Tee	Butt-Weld. End	DN	15-300	ASTM	A403-WP321/347
E45S	Elbow 45 Deg.	Socket-Weld. End	DN	15-40	ASTM	A182-F321/347
E90S	Elbow 90 Deg.	Socket-Weld. End	DN	15-40	ASTM	A182-F321/347
TEES	Equal Tee	Socket-Weld. End	DN	15-40	ASTM	A182-F321/347
COUS	Coupling	Socket-Weld. End	DN	15-40	ASTM	A182-F321/347
CAPS	Cap	Socket-Weld. End	DN	15-40	ASTM	A182-F321/3476

* REDUCING FITTINGS

BROS	Branch Fitting Outlet Socket-Weld. End	DN	15-40	ASTM	A182-F321/347
BROB	Branch Outlet Red. Butt-Weld.	DN	80-300	ASTM	A182-F321/347
RECB	Reducer Conc. Butt-Weld. End	DN	20-300	ASTM	A403-WP321/347
REEB	Reducer Ecc. Butt-Weld. End	DN	20-300	ASTM	A403-WP321/347
TERB	Tee Reducing Butt-Weld. End	DN	20-50	ASTM	A403-WP321/347
TERS	Tee Reducing Socket-Weld. End	DN	20-40	ASTM	A182-F321/347

Note:
- For full material description see relevant MESC buying description.
- Where both socket weld and butt weld fittings are specified, preference is subject to company approval.

* VALVES

CHVF	Check Valve Flanged	DN	15-300	Body:	ASTM	A351-CF8C, A182-F321
				Trim:	AISI	321
GAVF	Gate Valve Flanged	DN	15-300	Body:	ASTM	A351-CF8C, A182-F321
				Trim:	AISI	321
GLVF	Globe Valve Flanged	DN	15-150	Body:	ASTM	A351-CF8C, A182-F321
				Trim:	AISI	321

* MISCELLANEOUS

GKSW	Gasket, Spiral Wound	DN	15-300	AISI	304, Graphite Filled, CS Centring-, AISI 304 Inner-Ring
ORFS	Orifice Flange Set	DN	50-300	ASTM	A182-F321
STBT	Stud Bolt with Nuts		____	ASTM	A453-Gr. 660, CL.A.

Class No.: FS06	Page: 3	Content: Piping Components

ITEM DESCRIPTION			NOMINAL PIPE SIZE 15	20	25	40	50	80	100	150	200	250	300
* PIPE													
Pipe		74.36.60 76.36.40	*	*	*	*	*	*	*	*	*	*	*
* FLANGES													
Blind Flange		76.65.10	*	*	*	*	*	*	*	*	*	*	*
Spectacle Blind Flange		76.88.07	*	*	*	*	*	*	*	*	*	*	*
Spacer Ring Type (ANS Flanges)		76.88.00	*	*	*	*	*	*	*	*	*	*	*
Welding Neck Flange		76.65.80	*	*	*	*	*	*	*	*	*	*	*
* FITTINGS													
Cap	Butt-Weld. End	76.33.18	*	*	*	*	*	*	*	*	*	*	*
Elbow 45 Deg.	Butt-Weld. End	76.33.38	*	*	*	*	*	*	*	*	*	*	*
Elbow 90 Deg.	Butt-Weld. End	76.33.39	*	*	*	*	*	*	*	*	*	*	*
Equal Tee	Butt-Weld. End	76.33.84	*	*	*	*	*	*	*	*	*	*	*
Elbow 45 Deg.	Socket-Weld. End	76.37.38	*	*	*	*							
Elbow 90 Deg.	Socket-Weld. End	76.37.39	*	*	*	*							
Equal Tee	Socket-Weld. End	76.37.84	*	*	*	*							
Coupling	Socket-Weld. End	76.37.28	*	*	*	*							
Cap	Socket-Weld. End	76.37.18	*	*	*	*							
* VALVES													
Check Valve Flanged		75.40.13	*	*	*	*	*	*	*	*	*	*	*
Gate Valve Flanged		75.40.30	*	*	*	*	*	*	*	*	*	*	*
Globe Valve Flanged		75.40.40	*	*	*	*	*	*	*	*			
* MISCELLANEOUS													
Gasket, Spiral Wound		85.41.31	*	*	*	*	*	*	*	*	*	*	*
Orifice Flange Set		60.88.52					*	*	*	*	*	*	*

Class No.: FS06	Page: 4	Content: Reducing Piping Components

Run		Br.	BROB 76.80.05	RECB 76.33.71	REEB 7 6.33.73	TERB 76.33.85	TERS 76.37.85
20	×	15		*	*	*	*
25	×	15		*	*	*	*
25	×	20		*	*	*	*
40	×	15				*	*
40	×	20		*	*	*	*
40	×	25		*	*	*	*
50	×	25		*	*		
50	×	40		*	*	*	
80	×	40		*	*		
80	×	50	*	*	*		
100	×	50	*	*	*		
100	×	80	*	*	*		
150	×	50	*				
150	×	80	*	*	*		
150	×	100	*	*	*		
200	×	50	*				
200	×	80	*				
200	×	100	*	*	*		
200	×	150	*	*	*		
250	×	50	*				
250	×	80	*				
250	×	100	*				
250	×	150	*	*	*		
250	×	200	*	*	*		
300	×	50	*				
300	×	80	*				
300	×	100	*				
300	×	150	*				
300	×	200	*	*	*		
300	×	250	*	*	*		

COMP. NAME	DESCRIPTION
BROB	Branch Outlet Red. Butt-Weld
RECB	Reducer Conc. Butt-Weld. End
REEB	Reducer Ecc. Butt-Weld. End
TERB	Tee Reducing Butt-Weld. End
TERS	Tee Reducing Socket-Weld. End
BROS	Branch Fitting Socket-Weld. End Outlet

RUN	Br.	BROS 76.80.26
40-150	15	*
200-300		*
50-80	20	*
100-300		*
50	25	*
80-100		*
150-300		*
80-100	40	*
150-300		*

Class No.: FS06	Page: 5	Content: Bolting and Assemblies

BOLT SET FLANGED JOINTS

DN	No.	Inch		mm	81.38.40
15	4	1/2	×	80	*
20	4	5/8	×	90	*
25	4	5/8	×	90	*
40	4	3/4	×	110	*
50	8	5/8	×	110	*
80	8	3/4	×	130	*
100	8	7/8	×	150	*
150	12	1	×	170	*
200	12	11/8	×	190	*
250	16	11/4	×	220	*
300	20	11/4	×	220	*

BOLT SET SPECTACLE/SPACER

DN	No.	Inch		mm	81.38.40
15	4	1/2	×	90	*
20	4	5/8	×	100	*
25	4	5/8	×	100	*
40	4	3/4	×	120	*
50	8	5/8	×	120	*
80	8	3/4	×	150	*
100	8	7/8	×	170	*
150	12	1	×	210	*
200	12	11/8	×	230	*
250	16	11/4	×	260	*
300	20	11/4	×	270	*

BOLT SET ORIFICE FLANGES

DN	No.	Inch		mm	81.38.63
15	4	5/8	×	135	*
20	4	5/8	×	135	*
25	4	5/8	×	135	*
40	4	3/4	×	140	*
50	8	5/8	×	150	*
80	8	3/4	×	150	*
100	8	7/8	×	160	*
150	12	1	×	180	*
200	12	1-1/8	×	210	*
250	16	1-1/4	×	230	*
300	20	1-1/4	×	240	*

* DRAIN POINT Fig. 0I

Run DN 15-25	Br DN 15	No.
Branch: Table Page 1		1
Blind Flange		1
Gasket Spiral Wound		2
Gate Valve Flanged		1
Stud Bolt with Nuts		8
Welding Neck Flange		1

* DRAIN POINT Fig. 0I

Run DN 40-40	Br DN 20	No.
Branch: Table Page 1		1
Blind Flange		1
Gasket Spiral Wound		2
Gate Valve Flanged		1
Stud Bolt with Nuts		8
Welding Neck Flange		1

DRAIN POINT Fig. 0J

Run DN 50-300	Br DN 20	No.
Branch: Table Page 1		1
Blind Flange		1
Gasket Spiral Wound		2
Gate Valve Flanged		1
Pipe Nipple 50 mm		1
Stud Bolt with Nuts		8
Welding Neck Flange		1

* VENT POINT Fig. 1I

Run DN 15-25	Br DN 15	No.
Branch: Table Page 1		1
Blind Flange		1
Gasket Spiral Wound		2
Globe Valve Flanged		1
Stud Bolt with Nuts		8
Welding Neck Flange		1

* VENT POINT Fig. 1I

Run DN 40-40	Br DN 20	No.
Branch: Table Page 1		1
Blind Flange		1
Gasket Spiral Wound		2
Globe Valve Flanged		1
Stud Bolt with Nuts		8
Welding Neck Flange		1

* VENT POINT Fig. 1J

Run DN 50-300	Br DN 20	No.
Branch: Table Page 1		1
Blind Flange		1
Gasket Spiral Wound		2
Globe Valve Flanged		1
Pipe Nipple 50 mm		1
Stud Bolt with Nuts		8
Welding Neck Flange		1

Class No.: FS07	Page: 1	Content: General
Base Material: Stainless Steel (AISI 321, Stab. HT)	First Issue: Revision:	
Rating: PN 100 (Class 600)	Date:	
Corrosion Allowance: 0 mm	Sign:	

Temperature °C		0	50	150	200	250	300	350	400	450	500	538
Pressure Barg.	DN 15-250	99.2	95.9	75.0	68.8	64.0	61.1	58.7	57.2	56.3	54.3	49.2
	DN 300-	97.3	95.9	75.0	68.8	64.0	61.1	58.7	57.2	56.3	54.3	49.2
	DN 350-450	77.0	77.0	75.0	68.8	64.0	61.1	58.7	57.2	56.3	54.3	49.2
	DN 500-600	70.6	70.6	70.6	66.0	61.8	58.7	56.5	55.3	54.1	53.4	48.5

TABLE OF SCHEDULES

DN	Schedule
15	40S
20	40S
25	40S
40	40S
50	40S
80	40S
100	40S
150	40S
200	80S
250	80S
300	80S
350	40
400	40
450	40
500	40
600	40

BRANCH CONNECTIONS 90 DEGREES

Run Size	BRANCH SIZE 15	20	25	40	50	80	100	150	200	250	300	350	400	450	500	600
600	C	C	C	C	E	E	E	E	E	E	B	B	B	B	B	A
500	C	C	C	C	E	E	E	E	E	B	B	B	B	B	A	
450	C	C	C	C	E	E	E	E	E	B	B	B	B	A		
400	C	C	C	C	E	E	E	E	B	B	B	B	A			
350	C	C	C	C	E	E	E	E	B	B	B	A				
300	C	C	C	C	E	E	E	B	B	B	A					
250	C	C	C	C	E	E	E	B	B	A						
200	C	C	C	C	E	E	B	B	A							
150	C	C	C	C	E	B	B	A								
100	C	C	C	C	B	B	A									
80	C	C	C	B	B	A										
50	C	C	C	B	A											
40	C	B	B	A												
25	B	B	A													
20	B	A														
15	A															

Notes:

- Design limits are acc. flange rating ANSI B16.5 Material Group 2.4 and to allowable internal prisor acc. ANSI B31.3.
- Cold bending of pipe is not allowed and hot bending is not recommended.
- Application of other types of branch connections is subject to company approval.

CODE	EXPLANATION OF CHARACTERS
A	Equal tee
B	Reducing tee
C	Branch fitting socket weld end outlet
E	Branch outlet reducing butt-weld

Class No.: FS07	Page: 2	Content: Material Descriptions

* PIPE

PIPE	Pipe	DN	15-300 (Seamless or welded)	ASTM	A312/TP321 Stab. HT.
		DN	350-600 (Welded)	ASTM	A358/TP321 Stab. Ht.
PNPP	Pipe Nipple 50 mm	DN	15-40 (Welded)	ASTM	A312/TP321 Stab. HT.

* FLANGES

BLFL	Blind Flange	DN	15-300	ASTM	A182/F321 Stab. HT.
SBFL	Spectacle Blind Flange	DN	15-600	ASTM	A240-TP321 Stab. HT.
SPRT	Spacer Ring Type (ANS Flanges)	DN	15-600	ASTM	A240-TP321 Stab. HT.
WNFL	Welding Neck Flange	DN	15-600	ASTM	A182/F321 Stab. HT.

* FITTINGS

CAPB	Cap	Butt-Weld. End	DN	15-600	ASTM	A403-WP-S-321 Stab. HT.
E45B	Elbow 45 Deg.	Butt-Weld. End	DN	15-400	ASTM	A403-WP-S-321 Stab. HT.
			DN	450-600	ASTM	A403-WP-S/W-321 Stab. HT.
E90B	Elbow 90 Deg.	Butt-Weld. End	DN	15-400	ASTM	A403-WP-S-321 Stab. HT.
			DN	450-600	ASTM	A403-WP-S/W-321 Stab. HT.
TEEB	Equal Tee	Butt-Weld. End	DN	15-400	ASTM	A403-WP-S-321 Stab. HT.
			DN	450-600	ASTM	A403-WP-S/W-321 Stab. HT.
E45S	Elbow 45 Deg.	Socket-Weld. End	DN	15-40	ASTM	A182/F321 Stab. HT.
E90S	Elbow 90 Deg.	Socket-Weld. End	DN	15-40	ASTM	A182/F321 Stab. HT.
TEES	Equal Tee	Socket-Weld. End	DN	15-40	ASTM	A182/F321 Stab. HT.
COUS	Coupling	Socket-Weld. End	DN	15-40	ASTM	A182/F321 Stab. HT.
CAPS	Cap	Socket-Weld. End	DN	15-40	ASTM	A182/F321 Stab. HT.

* REDUCING FITTINGS

BROS	Branch Fitting Outlet Socket-Weld. End	DN	15-40	ASTM	A182/F321 Stab. HT.
BROB	Branch Outlet Red. Butt-Weld.	DN	80-600	ASTM	A182/F321 Stab. HT.
RECB	Reducer Conc. Butt-Weld. End	DN	20-400	ASTM	A403-WP-S-321 Stab. HT.
		DN	450-600	ASTM	A403-WP-S/W-321 Stab. HT.
REEB	Reducer Ecc. Butt-Weld. End	DN	20-400	ASTM	A403-WP-S-321 Stab. HT.
		DN	450-600	ASTM	A403-WP-S/W-321 Stab. HT.
TERB	Tee Reducing Butt-Weld. End	DN	20-400	ASTM	A403-WP-S-321 Stab. HT.
		DN	450-600	ASTM	A403-WP-S/W-321 Stab. HT.
TERS	Tee Reducing Socket-Weld. End	DN	20-40	ASTM	A182/F321 Stab. HT.

* VALVES

CHVB	Check Valve Butt-Weld. End	DN	15-400	Body:	ASTM	A351/CF8C, A182/F321
				Trim:	AISI	321 + Stilletes 6
GAVB	Gate Valve Butt-Weld. End	DN	15-400	Body:	ASTM	A351/CF8C, A182/F321
				Trim:	AISI	321 + Stilletes 6
GLVB	Globe Valve Butt-Weld. End	DN	15-150	Body:	ASTM	A351/CF8C, A182/F321
GAVF	Gate Valve Flanged End	DN	15-50	Body:	ASTM	A351-CF8C, A182-F321
				Trim:	AISI	321 + Stilletes 6

* MISCELLANEOUS

GKSW	Gasket, Spiral Wound	DN	15-600	AISI	316, 316L, Graphite Filled CS Centeing-, SS Inner-Ring
ORFS	Orifice Flange Set	DN	50-600	ASTM	A182-F321 Stab. HT.
STBT	Stud Bolt with Nuts		____	ASTM	A453-Gr. 660, CL. A.

Note:
- For full material description see relevant MESC buying description.
- Where both socket weld and butt weld fittings are specified, preference is subject to company approval.

Class No.: FS07	Page: 3	Content: Piping Components

ITEM DESCRIPTION		NOMINAL PIPE SIZE 15	20	25	40	50	80	100	150	200	250	300	350	400	450	500	600
* PIPE																	
Pipe	74.36.40	*	*	*	*	*	*	*	*	*	*	*	*	*	*	*	*
* FLANGES																	
Blind Flange	76.65.10	*	*	*	*	*	*	*	*	*	*	*	*	*	*	*	*
Spectacle Blind Flange	76.88.07	*	*	*	*	*	*	*	*	*	*	*	*	*	*	*	*
Spacer Ring Type (ANS Flanges)	76.88.00	*	*	*	*	*	*	*	*	*	*	*	*	*	*	*	*
Welding Neck Flange	76.65.80	*	*	*	*	*	*	*	*	*	*	*	*	*	*	*	*
* FITTINGS																	
Cap Butt-Weld. End	76.33.18	*	*	*	*	*	*	*	*	*	*	*	*	*	*	*	*
Elbow 45 Deg. Butt-Weld. End	76.33.38	*	*	*	*	*	*	*	*	*	*	*	*	*	*	*	*
Elbow 90 Deg. Butt-Weld. End	76.33.41	*	*	*	*	*	*	*	*	*	*	*	*	*	*	*	*
Equal Tee Butt-Weld. End	76.33.84	*	*	*	*	*	*	*	*	*	*	*	*	*	*	*	*
Elbow 45 Deg. Socket-Weld. End	76.34.38	*	*	*	*												
Elbow 90 Deg. Socket-Weld. End	76.34.39	*	*	*	*												
Equal Tee Socket-Weld. End	76.34.80	*	*	*	*												
Coupling Socket-Weld. End	76.34.28	*	*	*	*												
Cap Socket-Weld. End	76.34.18	*	*	*	*												
* VALVES																	
Check Valve Butt-Weld. End	75.58.15	*	*	*	*	*	*	*	*	*	*	*	*	*	*	*	*
Gate Valve Butt-Weld. End	75.58.35	*	*	*	*	*	*	*	*	*	*	*	*	*	*	*	*
Globe Valve Butt-Weld. End	75.58.45	*	*	*	*	*	*	*	*								
* MISCELLANEOUS																	
Gasket, Spiral Wound	85.41.37	*	*	*	*	*	*	*	*	*	*	*	*	*	*	*	*
Orifice Flange Se t	60.88.52					*	*	*	*	*	*	*	*	*	*	*	*

Class No.:	FS07	Page:	4	Content:	Reducing Piping Components

Run		Br.	BROB 76.80.05	RECB 76.33.71	REEB 76.33.73	TERB 76.33.85	TERS 76.34.85
20	×	15		*	*	*	*
25	×	15		*	*	*	*
25	×	20		*	*	*	*
40	×	15				*	*
40	×	20		*	*	*	*
40	×	25		*	*	*	*
50	×	25		*	*		
50	×	40		*	*	*	
80	×	40		*	*		
80	×	50		*	*	*	
100	×	50		*	*	*	
100	×	80		*	*	*	
150	×	50	*				
150	×	80	*	*	*	*	
150	×	100	*	*	*	*	
200	×	50	*				
200	×	80	*				
200	×	100	*	*	*	*	
200	×	150	*	*	*	*	
250	×	50	*				
250	×	80	*				
250	×	100	*			*	
250	×	150	*	*	*	*	
250	×	200	*	*	*	*	
300	×	50	*				
300	×	80	*				
300	×	100	*				
300	×	150	*	*	*	*	
300	×	200	*	*	*	*	
300	×	250	*	*	*	*	
350	×	50	*				
350	×	80	*				
350	×	100	*				
350	×	150	*			*	
350	×	200	*	*	*	*	
350	×	250	*	*	*	*	
350	×	300	*	*	*	*	

Run		Br.	BROB 76.80.05	RECB 76.33.71	REEB 76.33.73	TERB 76.33.85
400	×	50	*			
400	×	80	*			
400	×	100	*			
400	×	150	*			*
400	×	200	*	*	*	*
400	×	250	*	*	*	*
400	×	300	*	*	*	*
400	×	350	*	*	*	*
450	×	50	*			
450	×	80	*			
450	×	100	*			
450	×	150	*			
450	×	200	*			*
450	×	250	*	*	*	*
450	×	300	*	*	*	*
450	×	350	*	*	*	*
450	×	400	*	*	*	*
500	×	50	*			
500	×	80	*			
500	×	100	*			
500	×	150	*			
500	×	200	*			*
500	×	250	*			*
500	×	300	*	*	*	*
500	×	350	*	*	*	*
500	×	400	*	*	*	*
500	×	450	*	*	*	*
600	×	50	*			
600	×	80	*			
600	×	100	*			
600	×	150	*			
600	×	200	*			
600	×	250	*			*
600	×	300	*			*
600	×	350	*			*
600	×	400	*	*	*	
600	×	450	*	*	*	*
600	×	500	*	*	*	*

COMP. NAME	DESCRIPTION
BROB	Branch Outlet Red. Butt-Weld
RECB	Reducer Conc. Butt-Weld. End
REEB	Reducer Ecc. Butt-Weld. End
TERB	Tee Reducing Butt-Weld. End
TERS	Tee Reducing Socket-Weld. End
BROS	Branch Fitting Socket-Weld. End Outlet

RUN	Br.	BROS 76.80.26
40-150	15	*
200-600		*
50-80	20	*
100-600		*
50	25	*
80-100		*
150-600		*
80-100	40	*
150-300		*
350-600		*

Class No.:	FS07	Page:	5	Content:	Bolting and Assemblies

BOLT SET FLANGED JOINTS

DN	No.	Inch		mm	81.38.40
15	4	1/2	×	80	*
20	4	5/8	×	90	*
25	4	5/8	×	90	*
40	4	3/4	×	110	*
50	8	5/8	×	110	*
80	8	3/4	×	130	*
100	8	7/8	×	150	*
150	12	1	×	170	*
200	12	11/8	×	190	*
250	16	11/4	×	220	*
300	20	11/4	×	220	*
350	20	13/8	×	240	*
400	20	11/2	×	250	*
450	20	15/8	×	280	*
500	24	15/8	×	290	*
600	24	17/8	×	330	*

BOLT SET SPECTACLE/SPACER

DN	No.	Inch		mm	81.38.40
15	4	1/2	×	90	*
20	4	5/8	×	100	*
25	4	5/8	×	100	*
40	4	3/4	×	120	*
50	8	5/8	×	120	*
80	8	3/4	×	150	*
100	8	7/8	×	170	*
150	12	1	×	210	*
200	12	11/8	×	230	*
250	16	11/4	×	260	*
300	20	11/4	×	270	*
350	20	13/8	×	290	*
400	20	11/2	×	310	*
450	20	15/8	×	340	*
500	24	15/8	×	360	*
600	24	17/8	×	415	*

BOLT SET ORIFICE FLANGES

DN	No.	Inch		mm	81.38.63
15	4	5/8	×	135	*
20	4	5/8	×	135	*
25	4	5/8	×	135	*
40	4	3/4	×	140	*
50	8	5/8	×	150	*
80	8	3/4	×	150	*
100	8	7/8	×	160	*
150	12	1	×	180	*
200	12	11/8	×	210	*
250	16	11/4	×	230	*
300	20	11/4	×	240	*
350	20	13/8	×	260	*
400	20	11/2	×	275	*
450	20	15/8	×	300	*
500	24	15/8	×	320	*
600	24	17/8	×	355	*

* DRAIN POINT	Fig. 0N		
Run	DN 15-25	Br DN 15	No.
Branch: Table Page 1			1
Blind Flange			1
Gasket Spiral Wound			1
Gate Valve Butt-Weld End			1
Pipe Nipple 50 mm			1
Stud Bolt with Nuts			4
Welding Neck Flange			1

* DRAIN POINT	Fig. 0N		
Run	DN 40-40	Br DN 20	No.
Branch: Table Page 1			1
Blind Flange			1
Gasket Spiral Wound			1
Gate Valve Butt-Weld End			1
Pipe Nipple 50 mm			1
Stud Bolt with Nuts			4
Welding Neck Flange			1

* DRAIN POINT	Fig. 0N		
Run	DN 50-600	Br DN 20	No.
Branch: Table Page 1			1
Blind Flange			1
Gasket Spiral Wound			1
Gate Valve Butt-Weld End			1
Pipe Nipple 50 mm			1
Stud Bolt with Nuts			4
Welding Neck Flange			1

* VENT POINT	Fig. 1N		
Run	DN 15-25	Br DN 15	No.
Branch: Table Page 1			1
Blind Flange			1
Gasket Spiral Wound			1
Globe Valve Butt-Weld End			1
Pipe Nipple 50 mm			1
Stud Bolt with Nuts			4
Welding Neck Flange			1

* VENT POINT	Fig. 1N		
Run	DN 40-40	Br DN 20	No.
Branch: Table Page 1			1
Blind Flange			1
Gasket Spiral Wound			1
Globe Valve Butt-Weld End			1
Pipe Nipple 50 mm			1
Stud Bolt with Nuts			4
Welding Neck Flange			1

* VENT POINT	Fig. 1N		
Run	DN 50-600	Br DN 20	No.
Branch: Table Page 1			1
Blind Flange			1
Gasket Spiral Wound			1
Globe Valve Butt-Weld End			1
Pipe Nipple 50 mm			1
Stud Bolt with Nuts			4
Welding Neck Flange			1

Class No.: GN01	Page: 1	Content: General
Base Material: Carbon Steel	First Issue: Revision:	
Rating: PN 150 (Class 900)	Date:	
Corrosion Allowance: 1 mm	Sign:	

Temperature °C		0	50	100	150	200	250	300	350	400
Pressure Barg.	DN 15-400	153.0	150.1	139.1	135.7	131.3	125.0	116.0	110.8	103.3

TABLE OF SCHEDULES

DN	Schedule
15	80
20	80
25	80
40	80
50	80
80	80
100	80
150	120
200	120
250	120
300	120
350	120
400	120

BRANCH CONNECTIONS 90 DEGREES

Run Size	BRANCH SIZE 15	20	25	40	50	80	100	150	200	250	300	350	400
400	C	C	C	C	E	E	E	E	E	E	E	E	A
350	C	C	C	C	E	E	E	E	E	E	E	A	
300	C	C	C	C	E	E	E	E	E	E	A		
250	C	C	C	C	E	E	E	E	E	A			
200	C	C	C	C	E	E	E	E	A				
150	C	C	C	C	E	E	E	A					
100	C	C	C	C	E	E	A						
80	C	C	C	C	E	A							
50	C	C	C	B	A								
40	C	B	B	A									
25	B	B	A										
20	B	A											
15	A												

Notes:

- Design limits are acc. flange rating ANSI B16.5 Material Group 1.1.
- API 5L-B welded pipe is normally the most economic choice.
- Application of other types of branch connections is subject to company approval.

CODE	EXPLANATION OF CHARACTERS
A	Equal tee
B	Reducing tee
C	Branch fitting outlet socket-weld
E	Branch outlet reducing butt-weld

Class No.: GN01	Page: 2	Content: Material Descriptions

* PIPE

PIPE	Pipe	DN	15-400	ASTM	A106-B
PNPP	Pipe Nipple 50 mm	DN	15-40	ASTM	A106-B

* FLANGES

BLFL	Blind Flange	DN	15-400	ASTM	A105
SBFL	Spectacle Blind Flange	DN	15-400	ASTM	A516-60
SPRT	Spacer Ring Type (ANS Flanges)	DN	15-400	ASTM	A516-60
WNFL	Welding Neck Flange	DN	15-400	ASTM	A105

* FITTINGS

CAPB	Cap	Butt-Weld. End	DN	15-400	ASTM	A234-WPB
E45B	Elbow 45 Deg.	Butt-Weld. End	DN	15-400	ASTM	A234-WPB
E90B	Elbow 90 Deg.	Butt-Weld. End	DN	15-400	ASTM	A234-WPB
TEEB	Equal Tee	Butt-Weld. End	DN	15-400	ASTM	A234-WPB
E45S	Elbow 45 Deg.	Socket-Weld. End	DN	15-40	ASTM	A105
E90S	Elbow 90 Deg.	Socket-Weld. End	DN	15-40	ASTM	A105
TEES	Equal Tee	Socket-Weld. End	DN	15-40	ASTM	A105
COUS	Coupling	Socket-Weld. End	DN	15-40	ASTM	A105
CAPS	Cap	Socket-Weld. End	DN	15-40	ASTM	A105

* REDUCING FITTINGS

BROS	Branch Fitting Socket-Weld. Outlet	DN	15-50	ASTM	A105
BROB	Branch Outlet Red. Butt-Weld.	DN	80-400	ASTM	A105
RECB	Reducer Conc. Butt-Weld. End	DN	20-400	ASTM	A234-WPB
REEB	Reducer Ecc. Butt-Weld. End	DN	20-400	ASTM	A234-WPB
TERB	Tee Reducing Butt-Weld. End	DN	20-400	ASTM	A234-WPB
TERS	Tee Reducing Socket-Weld. End	DN	20-40	ASTM	A105

Note:
For full material description see relevant MESC buying description.

* VALVES

CHVB	Check Valve Butt-Weld. Ends	DN	15-400	Body:	ASTM	A216-WCB/WCC, A105
				Trim:	AISI	316 (L) + Stellite 6
GAVB	Gate Valve Butt-Weld. Ends	DN	15-400	Body:	ASTM	A216-WCB/WCC, A105
				Trim:	AISI	316 (L) + Stellite 6
GAVF	Gate Valve Flanged	DN	15-50	Body:	ASTM	A216-WCB/WCC, A105
				Trim:	AISI	316 (L) + Stellite 6
GLVF	Globe Valve Flanged	DN	15-50	Body:	ASTM	A216-WCB/WCC, A105
				Trim:	AISI	316 (L) + Stellite 6
GLVB	Globe Valve Butt-Weld. Ends	DN	15-150	Body:	ASTM	A216-WCB/WCC, A105
				Trim:	AISI	316 (L) + Stellite 6

* MISCELLANEOUS

GKSW	Gasket, Spiral Wound	DN	15-400		AISI	316, 316L, Graphite Filled
					CS Centring-, SS Inner-Ring	
ORFS	Orifice Flange Set	DN	50-400		ASTM	A105
STBT	Stud Bolt with Nuts		___	Studs:	ASTM	A193-B7
				Nuts:	ASTM	A194-2H

Class No.: GN01	Page: 3	Content: Piping Components

ITEM DESCRIPTION			NOMINAL PIPE SIZE 15	20	25	40	50	80	100	150	200	250	300	350	400
* PIPE															
Pipe		74.30.21/31	*	*	*	*	*	*	*	*	*	*	*	*	*
Pipe Nipple 50 mm		76.30.57	*	*	*	*									
* FLANGES															
Blind Flange		76.62.10	*	*	*	*	*	*	*	*	*	*	*	*	*
Spectacle Blind Flange		76.88.06	*	*	*	*	*	*	*	*	*	*	*	*	*
Spacer Ring Type (ANS Flanges)		76.88.16	*	*	*	*	*	*	*	*	*	*	*	*	*
Welding Neck Flange		76.62.79	*	*	*	*	*	*	*	*	*	*	*	*	*
* FITTINGS															
Cap	Butt-Weld. End	76.30.18	*	*	*	*	*	*	*	*	*	*	*	*	*
Elbow 45 Deg.	Butt-Weld. End	76.30.38	*	*	*	*	*	*	*	*	*	*	*	*	*
Elbow 90 Deg.	Butt-Weld. End	76.30.39/40	*	*	*	*	*	*	*	*	*	*	*	*	*
Equal Tee	Butt-Weld. End	76.30.84	*	*	*	*	*	*	*	*	*	*	*	*	*
Elbow 45 Deg.	Socket-Weld. End	76.34.38	*	*	*	*									
Elbow 90 Deg.	Socket-Weld. End	76.34.39	*	*	*	*									
Equal Tee	Socket-Weld. End	76.34.84	*	*	*	*									
Coupling	Socket-Weld. End	76.34.28	*	*	*	*									
Cap	Socket-Weld. End	76.34.18	*	*	*	*									
* VALVES															
Check Valve Butt-Weld. End		75.56.16	*	*	*	*	*	*	*	*	*	*	*	*	*
Gate Valve Butt-Weld. End		75.56.40	*	*	*	*	*	*	*	*	*	*	*	*	*
Gate Valve Flanged		75.37.36	*	*	*	*	*								
Globe Valve Butt-Weld. End		75.56.54	*	*	*	*	*	*	*	*					
Globe Valve Flanged		75.37.46	*	*	*	*	*								
* MISCELLANEOUS															
Gasket, Spiral Wound		85.41.37	*	*	*	*	*	*	*	*	*	*	*	*	*
Orifice Flange Set		60.88.52					*	*	*	*	*	*	*	*	*

Class No.: GN01	Page: 4	Content: Reducing Piping Components

Run		Br.	BROB 76.85.05	RECB 76.30.72	REEB 76.30.73	TERB 76.30.85	TERS 76.34.85
20	×	15		*	*	*	*
25	×	15		*	*	*	*
25	×	20		*	*	*	*
40	×	15		*	*	*	*
40	×	20		*	*	*	*
40	×	25		*	*	*	*
50	×	20		*	*	*	
50	×	25		*	*	*	
50	×	40		*	*	*	
80	×	40		*	*	*	
80	×	50	*	*	*	*	
100	×	40		*	*		
100	×	50	*	*	*	*	
100	×	80	*	*	*	*	
150	×	50	*				
150	×	80	*	*	*	*	
150	×	100	*	*	*	*	
200	×	50	*				
200	×	80	*				
200	×	100	*	*	*	*	
200	×	150	*	*	*	*	
250	×	50	*				
250	×	80	*				
250	×	100	*	*	*		
250	×	150	*	*	*	*	
250	×	200	*	*	*	*	
300	×	50	*				
300	×	80	*				
300	×	100	*				
300	×	150	*	*	*	*	
300	×	200	*	*	*	*	
300	×	250	*	*	*	*	
350	×	50	*				
350	×	80	*				
350	×	100	*				
350	×	150	*	*	*	*	
350	×	200	*	*	*	*	
350	×	250	*	*	*	*	
350	×	300	*	*	*	*	

Run		Br.	BROB 76.85.05	RECB 76.30.72	REEB 76.30.73	TERB 76.30.85
400	×	50	*			
400	×	80	*			
400	×	100	*			
400	×	150	*	*	*	*
400	×	200	*	*	*	*
400	×	250	*	*	*	*
400	×	300	*	*	*	*
400	×	350	*	*	*	*

COMP. NAME	DESCRIPTION
BROS	Branch Fitting Outlet Socket-Weld.
BROB	Branch Outlet Red. Butt-Weld
RECB	Reducer Conc. Butt-Weld. End
REEB	Reducer Ecc. Butt-Weld. End
TERB	Tee Reducing Butt-Weld. End
TERS	Tee Reducing Socket-Weld. End

RUN	Br.	BROS 76.80.26
40-150	15	*
200-400		*
50-80	20	*
100-400		*
50	25	*
80-100		*
150-400		*
80-100	40	*
150-300		*
350-400		*

Class No.:	GN01	Page:	5	Content:	Bolting and Assemblies

BOLT SET FLANGED JOINTS

DN	No.	Inch		mm	81.38.61
15	4	3/4	×	110	*
20	4	3/4	×	110	*
25	4	7/8	×	130	*
40	4	1	×	140	*
50	8	7/8	×	150	*
80	8	7/8	×	150	*
100	8	11/8	×	170	*
150	12	11/8	×	190	*
200	12	13/8	×	220	*
250	16	13/8	×	240	*
300	20	13/8	×	250	*
350	20	11/2	×	275	*
400	20	15/8	×	290	*

BOLT SET SPECTACLE/SPACER

DN	No.	Inch		mm	81.38.61
15	4	3/4	×	120	*
20	4	3/4	×	130	*
25	4	7/8	×	140	*
40	4	1	×	160	*
50	8	7/8	×	160	*
80	8	7/8	×	170	*
100	8	11/8	×	195	*
150	12	11/8	×	230	*
200	12	13/8	×	265	*
250	16	13/8	×	290	*
300	20	13/8	×	310	*
350	20	11/2	×	345	*
400	20	15/8	×	360	*

BOLT SET ORIFICE FLANGES

DN	No.	Inch		mm	81.38.61
15	4	7/8	×	150	*
20	4	7/8	×	150	*
25	4	7/8	×	150	*
40	4	1	×	160	*
50	8	7/8	×	160	*
80	8	7/8	×	160	*
100	8	1-1/8	×	180	*
150	12	1-1/8	×	210	*
200	12	1-3/8	×	240	*
250	16	1-3/8	×	250	*
300	20	1-3/8	×	275	*
350	20	1-1/2	×	300	*
400	20	1-5/8	×	305	*

* DRAIN POINT Fig. 0N

Run DN 15-25	Br DN 15	No.
Branch: Table Page 1		1
Blind Flange		1
Gasket Spiral Wound		1
Gate Valve Butt-Weld. Ends		1
Pipe Nipple 50 mm		1
Stud Bolt with Nuts		4
Welding Neck Flange		1

* DRAIN POINT Fig. 0N

Run DN 40-40	Br DN 20	No.
Branch: Table Page 1		1
Blind Flange		1
Gasket Spiral Wound		1
Gate Valve Butt-Weld. Ends		1
Pipe Nipple 50 mm		1
Stud Bolt with Nuts		4
Welding Neck Flange		1

* DRAIN POINT Fig. 0N

Run DN 50-400	Br DN 20	No.
Branch: Table Page 1		1
Blind Flange		1
Gasket Spiral Wound		1
Gate Valve Butt-Weld. Ends		1
Pipe Nipple 50 mm		1
Stud Bolt with Nuts		4
Welding Neck Flange		1

* VENT POINT Fig. 1N

Run DN 15-25	Br DN 15	No.
Branch: Table Page 1		1
Blind Flange		1
Gasket Spiral Wound		1
Globe Valve Butt-Weld. Ends		1
Pipe Nipple 50 mm		1
Stud Bolt with Nuts		4
Welding Neck Flange		1

* VENT POINT Fig. 1N

Run DN 40-40	Br DN 20	No.
Branch: Table Page 1		1
Blind Flange		1
Gasket Spiral Wound		1
Globe Valve Butt-Weld. Ends		1
Pipe Nipple 50 mm		1
Stud Bolt with Nuts		4
Welding Neck Flange		1

* VENT POINT Fig. 1N

Run DN 50-400	Br DN 20	No.
Branch: Table Page 1		1
Blind Flange		1
Gasket Spiral Wound		1
Globe Valve Butt-Weld. Ends		1
Pipe Nipple 50 mm		1
Stud Bolt with Nuts		4
Welding Neck Flange		1

Class No.: GN04	Page: 1	Content: General
Base Material: Carbon Steel	First Issue: Revision:	
Rating: PN 150 (Class 900)	Date:	
Corrosion Allowance: 1 mm	Sign:	

Temperature °C		0	50	100	150	200	250	300	350	400
Pressure Barg.	DN 15-400	153.0	150.1	139.1	135.7	131.3	125.0	116.0	110.8	103.3

TABLE OF SCHEDULES

DN	Schedule
15	80
20	80
25	80
40	80
50	80
80	80
100	80
150	120
200	120
250	120
300	120
350	120
400	120

BRANCH CONNECTIONS 90 DEGREES

Run Size	BRANCH SIZE 15	20	25	40	50	80	100	150	200	250	300	350	400
400	C	C	C	C	E	E	E	E	E	E	E	E	A
350	C	C	C	C	E	E	E	E	E	E	E	A	
300	C	C	C	C	E	E	E	E	E	E	A		
250	C	C	C	C	E	E	E	E	E	A			
200	C	C	C	C	E	E	E	E	A				
150	C	C	C	C	E	E	E	A					
100	C	C	C	C	E	E	A						
80	C	C	C	C	E	A							
50	C	C	C	B	A								
40	C	B	B	A									
25	B	B	A										
20	B	A											
15	A												

Notes:

- Design limits are acc. flange rating ANSI B16.5 Material Group 1.1.
- Piston type check valves for horizontal mounting only.
- Application of other types of branch connections is subject to company approval.

CODE	EXPLANATION OF CHARACTERS
A	Equal tee
B	Reducing tee
C	Branch fitting outlet socket-weld
E	Branch outlet reducing butt-weld

Class No.: GN04	Page: 2	Content: Material Descriptions

* PIPE

PIPE	Pipe	DN	15-400	ASTM	A106-B
PNPP	Pipe Nipple 50 mm	DN	15-40	ASTM	A106-B

* FLANGES

BLFL	Blind Flange	DN	15-400	ASTM	A105
SBFL	Spectacle Blind Flange	DN	15-400	ASTM	A516-60
SPRT	Spacer Ring Type (ANS Flanges)	DN	15-400	ASTM	A516-60
WNFL	Welding Neck Flange	DN	15-400	ASTM	A105

* FITTINGS

CAPB	Cap	Butt-Weld. End	DN	15-400	ASTM	A234-WPB
E45B	Elbow 45 Deg.	Butt-Weld. End	DN	15-400	ASTM	A234-WPB
E90B	Elbow 90 Deg.	Butt-Weld. End	DN	15-400	ASTM	A234-WPB
TEEB	Equal Tee	Butt-Weld. End	DN	15-400	ASTM	A234-WPB
E45S	Elbow 45 Deg.	Socket-Weld. End	DN	15-40	ASTM	A105
E90S	Elbow 90 Deg.	Socket-Weld. End	DN	15-40	ASTM	A105
TEES	Equal Tee	Socket-Weld. End	DN	15-40	ASTM	A105
COUS	Coupling	Socket-Weld. End	DN	15-40	ASTM	A105
CAPS	Cap	Socket-Weld. End	DN	15-40	ASTM	A105

* REDUCING FITTINGS

BROS	Branch Outlet Socket-Weld. End	DN	15-50	ASTM	A105
BROB	Branch Outlet Red. Butt-Weld.	DN	80-400	ASTM	A105
RECB	Reducer Conc. Butt-Weld. End	DN	20-400	ASTM	A234-WPB
REEB	Reducer Ecc. Butt-Weld. End	DN	20-400	ASTM	A234-WPB
TERB	Tee Reducing Butt-Weld. End	DN	20-400	ASTM	A234-WPB
TERS	Tee Reducing Socket-Weld. End	DN	20-40	ASTM	A105

Note:
- For full material description see relevant buying description.
- Where both socket weld and butt weld fittings are specified, preference is subject to company approval.

* VALVES

CHVF	Check Valve Flanged	DN	15-400	Body:	ASTM	A216-WCB/WCC, A105
				Trim:	AISI	316L + Stellite 6
GAVF	Gate Valve Flanged	DN	15-400	Body:	ASTM	A216-WCB/WCC, A105
				Trim:	AISI	316L + Stellite 6
GLVF	Globe Valve Flanged	DN	15-150	Body:	ASTM	A216-WCB/WCC, A105
				Trim:	AISI	316L + Stellite 6

* MISCELLANEOUS

GKSW	Gasket, Spiral Wound	DN	15-400	AISI 316, 316L, Graphite Filled		
					CS Centring-, SS Inner-Ring	
ORFS	Orifice Flange Set	DN	50-400		ASTM	A105
STBT	Stud Bolt with Nuts		___	Studs:	ASTM	A193-B7
				Nuts:	ASTM	A194-2H

Class No.: GN04	Page: 3	Content: Piping Components

NOMINAL PIPE SIZE ITEM DESCRIPTION		MESC	15	20	25	40	50	80	100	150	200	250	300	350	400
* PIPE															
Pipe		74.30.21/31	*	*	*	*	*	*	*	*	*	*	*	*	*
Pipe Nipple 50 mm		76.30.57	*	*	*	*									
* FLANGES															
Blind Flange		76.62.10	*	*	*	*	*	*	*	*	*	*	*	*	*
Spectacle Blind Flange		76.88.06	*	*	*	*	*	*	*	*	*	*	*	*	*
Spacer Ring Type (ANS Flanges)		76.88.16	*	*	*	*	*	*	*	*	*	*	*	*	*
Welding Neck Flange		76.62.79	*	*	*	*	*	*	*	*	*	*	*	*	*
* FITTINGS															
Cap	Butt-Weld. End	76.30.19	*	*	*	*	*	*	*	*	*	*	*	*	*
Elbow 45 Deg.	Butt-Weld. End	76.30.38	*	*	*	*	*	*	*	*	*	*	*	*	*
Elbow 90 Deg.	Butt-Weld. End	76.30.39/40	*	*	*	*	*	*	*	*	*	*	*	*	*
Equal Tee	Butt-Weld. End	76.30.84	*	*	*	*	*	*	*	*	*	*	*	*	*
Elbow 45 Deg.	Socket-Weld. End	76.34.38	*	*	*	*									
Elbow 90 Deg.	Socket-Weld. End	76.34.39	*	*	*	*									
Equal Tee	Socket-Weld. End	76.34.84	*	*	*	*									
Coupling	Socket-Weld. End	76.34.28	*	*	*	*									
Cap	Socket-Weld. End	76.34.18	*	*	*	*									
* VALVES															
Check Valve Flanged		75.10.05	*	*	*	*	*	*	*	*	*	*	*	*	*
Gate Valve Flanged		75.20.04	*	*	*	*	*	*	*	*	*	*	*	*	*
Globe Valve Flanged		75.30.05	*	*	*	*	*	*	*	*					
* MISCELLANEOUS															
Gasket, Spiral Wound		85.41.37	*	*	*	*	*	*	*	*	*	*	*	*	*
Orifice Flange Set		60.88.52					*	*	*	*	*	*	*	*	*

Class No.: GN04	Page: 4	Content: Reducing Piping Components

Run		Br.	BROB 76.80.05	RECB 76.30.72	REEB 76.30.73	TERB 76.30.85	TERS 76.34.85
20	×	15		*	*	*	*
25	×	15		*	*	*	*
25	×	20		*	*	*	*
40	×	15		*	*	*	*
40	×	20		*	*	*	*
40	×	25		*	*	*	*
50	×	20		*	*	*	
50	×	25		*	*	*	
50	×	40		*	*	*	
80	×	40		*	*	*	
80	×	50	*	*	*	*	
100	×	40		*	*		
100	×	50	*	*	*	*	
100	×	80	*	*	*	*	
150	×	50	*				
150	×	80	*	*	*	*	
150	×	100	*	*	*	*	
200	×	50	*				
200	×	80	*				
200	×	100	*	*	*		
200	×	150	*	*	*	*	
250	×	50	*				
250	×	80	*				
250	×	100	*	*	*		
250	×	150	*	*	*	*	
250	×	200	*	*	*	*	
300	×	50	*				
300	×	80	*				
300	×	100	*				
300	×	150	*	*	*	*	
300	×	200	*	*	*	*	
300	×	250	*	*	*	*	
350	×	50	*				
350	×	80	*				
350	×	100	*				
350	×	150	*	*	*	*	
350	×	200	*	*	*	*	
350	×	250	*	*	*	*	
350	×	300	*	*	*	*	

Run		Br.	BROB 76.80.05	RECB 76.30.72	REEB 76.30.73	TERB 76.30.85
400	×	50	*			
400	×	80	*			
400	×	100	*			
400	×	150	*	*	*	*
400	×	200	*	*	*	*
400	×	250	*	*	*	*
400	×	300	*	*	*	*
400	×	350	*	*	*	*

COMP. NAME	DESCRIPTION
BROS	Branch Fitting Socket-Weld. Outlet
BROB	Branch Outlet Red. Butt-Weld
RECB	Reducer Conc. Butt-Weld. End
REEB	Reducer Ecc. Butt-Weld. End
TERB	Tee Reducing Butt-Weld. End
TERS	Tee Reducing Socket-Weld. End

RUN	Br.	BROS 76.80.26
40-150	15	*
200-400		*
50-80	20	*
100-400		*
50	25	*
80-100		*
150-400		*
80-100	40	*
150-300		*
350-400		*

Class No.: GN04	Page: 5	Content: Bolting and Assemblies

BOLT SET FLANGED JOINTS

DN	No.	Inch		mm	81.38.61
15	4	3/4	×	110	*
20	4	3/4	×	110	*
25	4	7/8	×	130	*
40	4	1	×	140	*
50	8	7/8	×	150	*
80	8	7/8	×	150	*
100	8	11/8	×	170	*
150	12	11/8	×	190	*
200	12	13/8	×	220	*
250	16	13/8	×	240	*
300	20	13/8	×	250	*
350	20	11/2	×	275	*
400	20	15/8	×	290	*

BOLT SET SPECTACLE/SPACER

DN	No.	Inch		mm	81.38.61
15	4	3/4	×	120	*
20	4	3/4	×	130	*
25	4	7/8	×	140	*
40	4	1	×	160	*
50	8	7/8	×	160	*
80	8	7/8	×	170	*
100	8	11/8	×	195	*
150	12	11/8	×	230	*
200	12	13/8	×	265	*
250	16	13/8	×	290	*
300	20	13/8	×	310	*
350	20	11/2	×	345	*
400	20	15/8	×	360	*

BOLT SET ORIFICE FLANGES

DN	No.	Inch		mm	81.38.61
15	4	7/8	×	150	*
20	4	7/8	×	150	*
25	4	7/8	×	150	*
40	4	1	×	160	*
50	8	7/8	×	160	*
80	8	7/8	×	160	*
100	8	11/8	×	180	*
150	12	11/8	×	210	*
200	12	13/8	×	240	*
250	16	13/8	×	250	*
300	20	13/8	×	275	*
350	20	11/2	×	300	*
400	20	15/8	×	305	*

* DRAIN POINT Fig. 0I

Run	DN 15-25	Br	DN 15	
Run	DN 40	Br	DN 20	No.
Branch: Table Page 1				1
Blind Flange				1
Gasket Spiral Wound				2
Gate Valve Flanged				1
Stud Bolt with Nuts				8
Welding Neck Flange				1

* DRAIN POINT Fig. 0J

Run	DN 50-400	Br	DN 20	No.
Branch: Table Page 1				1
Blind Flange				1
Gasket Spiral Wound				2
Gate Valve Flanged				1
Pipe Nipple 50 mm				1
Stud Bolt with Nuts				8
Welding Neck Flange				1

* VENT POINT Fig. 1I

Run	DN 15-25	Br	DN 15	
Run	DN 40	Br	DN 20	No.
Branch: Table Page 1				1
Blind Flange				1
Gasket Spiral Wound				2
Globe Valve Flanged				1
Stud Bolt with Nuts				8
Welding Neck Flange				1

* VENT POINT Fig. 1J

Run	DN 50-400	Br	DN 20	No.
Branch: Table Page 1				1
Blind Flange				1
Gasket Spiral Wound				2
Globe Valve Flanged				1
Pipe Nipple 50 mm				1
Stud Bolt with Nuts				8
Welding Neck Flange				1

Class No.: GN07	Page: 1	Content: General
Base Material: Carbon Steel, Fine Gr. Low Temp.	First Issue: Revision:	
Rating: PN 150 (Class 900)	Date:	
Corrosion Allowance: 1 mm	Sign:	

Temperature °C		-50	0	50	100	150	200	250	300	340
Pressure Barg.	DN 15-300	143.7	143.7	142.0	135.3	131.9	127.9	121.6	113.1	108.4

TABLE OF SCHEDULES

DN	Schedule
15	80
20	80
25	80
40	80
50	80
80	80
100	80
150	80
200	80
250	80
300	100
350	100
400	100

BRANCH CONNECTIONS 90 DEGREES

Run Size	BRANCH SIZE 15	20	25	40	50	80	100	150	200	250	300
300	C	C	C	C	E	E	E	E	E	E	A
250	C	C	C	C	E	E	E	E	E	A	
200	C	C	C	C	E	E	E	E	A		
150	C	C	C	C	E	E	E	A			
100	C	C	C	C	E	E	A				
80	C	C	C	C	E	A					
50	C	C	C	C	A						
40	C	C	C	A							
25	B	B	A								
20	B	A									
15	A										

Notes:

- Design limits are acc. flange rating ANSI B16.5 Material Group 1.3.
- Application of other types of branch connections is subject to company approval.

CODE	EXPLANATION OF CHARACTERS
A	Equal tee
B	Reducing tee
C	Branch fitting outlet socket-weld
E	Branch outlet reducing butt-weld

Class No.: GN07	Page: 2	Content: Material Descriptions

* PIPE

PIPE	Pipe	DN	15-300	ASTM	A333-6 (Seamless)
PNPP	Pipe Nipple 50 mm	DN	15-40	ASTM	A333-6 (Seamless)

* FLANGES

BLFL	Blind Flange	DN	15-300	ASTM	A350-LF2
SBFL	Spectacle Blind Flange	DN	15-300	ASTM	A516-60
SPRT	Spacer Ring Type (ANS Flanges)	DN	15-300	ASTM	A516-60
WNFL	Welding Neck Flange	DN	15-300	ASTM	A350-LF2

* FITTINGS

CAPB	Cap	Butt-Weld. End	DN	15-300	ASTM	A420-WPL6
E45B	Elbow 45 Deg.	Butt-Weld. End	DN	15-300	ASTM	A420-WPL6
E90B	Elbow 90 Deg.	Butt-Weld. End	DN	15-300	ASTM	A420-WPL6
TEEB	Equal Tee	Butt-Weld. End	DN	15-300	ASTM	A420-WPL6
E45S	Elbow 45 Deg.	Socket-Weld. End	DN	15-40	ASTM	A105
E90S	Elbow 90 Deg.	Socket-Weld. End	DN	15-40	ASTM	A105
TEES	Equal Tee	Socket-Weld. End	DN	15-40	ASTM	A105
COUS	Coupling	Socket-Weld. End	DN	15-40	ASTM	A105
CAPS	Cap	Socket-Weld. End	DN	15-40	ASTM	A105

* REDUCING FITTINGS

BROS	Branch Fitting Socket-Weld. Outlet	DN	15-50	ASTM	A350-LF2
BROB	Branch Outlet Red. Butt-Weld.	DN	80-300	ASTM	A350-LF2
RECB	Reducer Conc. Butt-Weld. End	DN	20-300	ASTM	A420-WPL6
REEB	Reducer Ecc. Butt-Weld. End	DN	20-300	ASTM	A420-WPL6
TERB	Tee Reducing Butt-Weld. End	DN	20-300	ASTM	A420-WPL6
TERS	Tee Reducing Socket-Weld. End	DN	20-40	ASTM	A105

Note:
For full material description see relevant MESC buying description.

* VALVES

CHVF	Check Valve Flanged	DN	15-300	Body:	ASTM	A352, A350
				Trim:	AISI	316, 316L
GAVF	Gate Valve Flanged	DN	15-300	Body:	ASTM	A352, A350
				Trim:	AISI	316, 316L
GLVF	Globe Valve Flanged	DN	15-150	Body:	ASTM	A352, A350
				Trim:	AISI	316, 316L

* MISCELLANEOUS

GKSW	Gasket, Spiral Wound	DN	15-300	AISI	316, 316L, Graphite Filled CS Centring-, SS Inner-Ring	
ORFS	Orifice Flange Set	DN	50-300		ASTM	A350-LF2
STBT	Stud Bolt with Nuts		_____	Studs:	ASTM	A320-L7
				Nuts:	ASTM	A194-4

Class No.: GN07	Page: 3	Content: Piping Components

ITEM DESCRIPTION			NOMINAL PIPE SIZE 15	20	25	40	50	80	100	150	200	250	300
* PIPE													
Pipe		74.30.10	*	*	*	*	*	*	*	*	*	*	*
* FLANGES													
Blind Flange		76.62.12	*	*	*	*	*	*	*	*	*	*	*
Spectacle Blind Flange		76.88.06	*	*	*	*	*	*	*	*	*	*	*
Spacer Ring Type (ANS Flanges)		76.88.00	*	*	*	*	*	*	*	*	*	*	*
Welding Neck Flange		76.62.82	*	*	*	*	*	*	*	*	*	*	*
* FITTINGS													
Cap	Butt-Weld. End	76.31.18	*	*	*	*	*	*	*	*	*	*	*
Elbow 45 Deg.	Butt-Weld. End	76.31.38	*	*	*	*	*	*	*	*	*	*	*
Elbow 90 Deg.	Butt-Weld. End	76.31.39	*	*	*	*	*	*	*	*	*	*	*
Equal Tee	Butt-Weld. End	76.31.84	*	*	*	*	*	*	*	*	*	*	*
Elbow 45 Deg.	Socket-Weld. End	76.34.38	*	*	*	*							
Elbow 90 Deg.	Socket-Weld. End	76.34.39	*	*	*	*							
Equal Tee	Socket-Weld. End	76.34.84	*	*	*	*							
Coupling	Socket-Weld. End	76.34.28	*	*	*	*							
Cap	Socket-Weld. End	76.34.18	*	*	*	*							
* VALVES													
Check Valve Flanged		75.42.16	*	*	*	*	*	*	*	*	*	*	*
Gate Valve Flanged		75.42.36	*	*	*	*	*	*	*	*	*	*	*
Globe Valve Flanged		75.42.46	*	*	*	*	*	*	*	*			
* MISCELLANEOUS													
Gasket, Spiral Wound		85.41.37	*	*	*	*	*	*	*	*	*	*	*
Orifice Flange Set		60.88.52					*	*	*	*	*	*	*

Class No.: GN07	Page: 4	Content: Reducing Piping Components

Run		Br.	BROB	RECB 76.31.70	REEB 76.31.71	TERB 76.31.85	TERS 76.34.85
20	×	15		*	*	*	*
25	×	15		*	*	*	*
25	×	20		*	*	*	*
40	×	15				*	*
40	×	20		*	*	*	*
40	×	25		*	*	*	*
50	×	20	*			*	
50	×	25		*	*	*	
50	×	40		*	*	*	
80	×	40		*	*	*	
80	×	50	*	*	*	*	
100	×	40				*	
100	×	50	*	*	*	*	
100	×	80	*	*	*	*	
150	×	50	*				
150	×	80	*	*	*	*	
150	×	100	*	*	*	*	
200	×	50	*				
200	×	80	*				
200	×	100	*	*	*	*	
200	×	150	*	*	*	*	
250	×	50	*				
250	×	80	*				
250	×	100	*			*	
250	×	150	*	*	*	*	
250	×	200	*	*	*	*	
300	×	50	*				
300	×	80	*				
300	×	100	*				
300	×	150	*			*	
300	×	200	*	*	*	*	
300	×	250	*	*	*	*	

COMP. NAME	DESCRIPTION
BROS	Branch Fitting Outlet Socket-Weld
BROB	Branch Outlet Red. Butt-Weld
RECB	Reducer Conc. Butt-Weld. End
REEB	Reducer Ecc. Butt-Weld. End
TERB	Tee Reducing Butt-Weld. End
TERS	Tee Reducing Socket-Weld. End

RUN	Br.	BROS 76.80.26
40-150	15	*
200-300		*
50-80	20	*
100-300		*
50	25	*
80-100		*
150-300		*
80-100	40	*
150-300		*

Class No.: GN07	Page: 5	Content: Bolting and Assemblies

BOLT SET FLANGED JOINTS

DN	No.	Inch		mm	81.38.63
15	4	3/4	×	110	*
20	4	3/4	×	110	*
25	4	7/8	×	125	*
40	4	1	×	140	*
50	8	7/8	×	145	*
80	8	7/8	×	145	*
100	8	11/8	×	170	*
150	12	11/8	×	190	*
200	12	13/8	×	220	*
250	16	13/8	×	235	*
300	20	13/8	×	250	*

BOLT SET SPECTACLE/SPACER

DN	No.	Inch		mm	81.38.63
15	4	3/4	×	115	*
20	4	3/4	×	125	*
25	4	7/8	×	140	*
40	4	1	×	160	*
50	8	7/8	×	160	*
80	8	7/8	×	165	*
100	8	11/8	×	195	*
150	12	11/8	×	230	*
200	12	13/8	×	265	*
250	16	13/8	×	285	*
300	20	13/8	×	310	*

BOLT SET ORIFICE FLANGES

DN	No.	Inch		mm	81.38.63
15	4	7/8	×	150	*
20	4	7/8	×	150	*
25	4	7/8	×	150	*
40	4	1	×	160	*
50	8	7/8	×	160	*
80	8	7/8	×	160	*
100	8	1-1/8	×	180	*
150	12	1-1/8	×	210	*
200	12	1-3/8	×	240	*
250	16	1-3/8	×	250	*
300	20	1-3/8	×	275	*

* DRAIN POINT Fig. 0J

Run DN 15-25	Br DN 15	No.
Branch: Table Page 1		1
Blind Flange		1
Gasket Spiral Wound		2
Gate Valve Flanged		1
Pipe Nipple 50 mm		1
Stud Bolt with Nuts		8
Welding Neck Flange		1

* DRAIN POINT Fig. 0J

Run DN 40-40	Br DN 20	No.
Branch: Table Page 1		1
Blind Flange		1
Gasket Spiral Wound		2
Gate Valve Flanged		1
Pipe Nipple 50 mm		1
Stud Bolt with Nuts		8
Welding Neck Flange		1

* DRAIN POINT Fig. 0J

Run DN 50-300	Br DN 20	No.
Branch: Table Page 1		1
Blind Flange		1
Gasket Spiral Wound		2
Gate Valve Flanged		1
Pipe Nipple 50 mm		1
Stud Bolt with Nuts		8
Welding Neck Flange		1

* VENT POINT Fig. 1J

Run DN 15-25	Br DN 15	No.
Branch: Table Page 1		1
Blind Flange		1
Gasket Spiral Wound		2
Globe Valve Flanged		1
Pipe Nipple 50 mm		1
Stud Bolt with Nuts		8
Welding Neck Flange		1

* VENT POINT Fig. 1J

Run DN 40-40	Br DN 20	No.
Branch: Table Page 1		1
Blind Flange		1
Gasket Spiral Wound		2
Globe Valve Flanged		1
Pipe Nipple 50 mm		1
Stud Bolt with Nuts		8
Welding Neck Flange		1

* VENT POINT Fig. 1J

Run DN 50-300	Br DN 20	No.
Branch: Table Page 1		1
Blind Flange		1
Gasket Spiral Wound		2
Globe Valve Flanged		1
Pipe Nipple 50 mm		1
Stud Bolt with Nuts		8
Welding Neck Flange		1

Class No.: GN10	Page: 1	Content: General
Base Material: Carbon Steel	First Issue: Revision:	
Rating: PN 150 (Class 900)	Date:	
Corrosion Allowance: 1 mm	Sign:	

Temperature °C		0	50	100	150	200	250	300	350	400
Pressure Barg.	DN 15-400	153.0	150.1	139.1	135.7	131.3	125.0	116.0	110.8	103.3

TABLE OF SCHEDULES

DN	Schedule
15	80
20	80
25	80
40	80
50	80
80	80
100	80
150	120
200	120
250	120
300	120
350	120
400	120

BRANCH CONNECTIONS 90 DEGREES

Run Size	BRANCH SIZE 15	20	25	40	50	80	100	150	200	250	300	350	400
400	C	C	C	C	E	E	E	E	E	E	E	E	A
350	C	C	C	C	E	E	E	E	E	E	E	A	
300	C	C	C	C	E	E	E	E	E	E	A		
250	C	C	C	C	E	E	E	E	E	A			
200	C	C	C	C	E	E	E	E	A				
150	C	C	C	C	E	E	E	A					
100	C	C	C	C	E	E	A						
80	C	C	C	C	E	A							
50	C	C	C	B	A								
40	C	B	B	A									
25	B	B	A										
20	B	A											
15	A												

Notes:

- Design limits are acc. flange rating ANSI B16.5 Material Group 1.1.
- API 5L-B welded pipe is normally the most economic choice.
- Application of other types of branch connections is subject to company approval.
- Piston type check valves for horizontal mounting only.

CODE	EXPLANATION OF CHARACTERS
A	Equal tee
B	Reducing tee
C	Branch fitting outlet socket-weld
E	Branch outlet reducing butt-weld

Class No.: GN10	Page: 2	Content: Material Descriptions

* PIPE

PIPE	Pipe	DN	15-400	ASTM	A106-B
PNPP	Pipe Nipple 50 mm	DN	15-40	ASTM	A106-B

* FLANGES

BLFL	Blind Flange	DN	15-400	ASTM	A105
SBFL	Spectacle Blind Flange	DN	15-400	ASTM	A516-60
SPRT	Spacer Ring Type (ANS Flanges)	DN	15-400	ASTM	A516-60
WNFL	Welding Neck Flange	DN	15-400	ASTM	A105

* FITTINGS

CAPB	Cap	Butt-Weld. End	DN	15-400	ASTM	A234-WPB
E45B	Elbow 45 Deg.	Butt-Weld. End	DN	15-400	ASTM	A234-WPB
E90B	Elbow 90 Deg.	Butt-Weld. End	DN	15-400	ASTM	A234-WPB
TEEB	Equal Tee	Butt-Weld. End	DN	15-400	ASTM	A234-WPB
E45S	Elbow 45 Deg.	Socket-Weld. End	DN	15-40	ASTM	A105
E90S	Elbow 90 Deg.	Socket-Weld. End	DN	15-40	ASTM	A105
TEES	Equal Tee	Socket-Weld. End	DN	15-40	ASTM	A105
COUS	Coupling	Socket-Weld. End	DN	15-40	ASTM	A105
CAPS	Cap	Socket-Weld. End	DN	15-40	ASTM	A105

* REDUCING FITTINGS

BROS	Branch Fitting Socket-Weld. Outlet	DN	15-50	ASTM	A105
BROB	Branch Outlet Red. Butt-Weld.	DN	15-400	ASTM	A105
RECB	Reducer Conc. Butt-Weld. End	DN	20-400	ASTM	A234-WPB
REEB	Reducer Ecc. Butt-Weld. End	DN	20-400	ASTM	A234-WPB
TERB	Tee Reducing Butt-Weld. End	DN	20-400	ASTM	A234-WPB
TERS	Tee Reducing Socket-Weld. End	DN	20-40	ASTM	A105

Note:
For full material description see relevant MESC buying description.

* VALVES

CHVF	Check Valve Flanged	DN	15-40	Body:	ASTM	A216-WCB/WCC, A105
				Trim:	AISI	316 (L) + Stellite 6
		DN	50-400	Body:	ASTM	A216-WCB/WCC, A105
				Trim:	AISI	410
GAVF	Gate Valve Flanged	DN	15-40	Body:	ASTM	A216-WCB/WCC, A105
				Trim:	AISI	316 (L) + Stellite 6
		DN	50-400	Body:	ASTM	A216-WCB/WCC, A105
				Trim:	AISI	410
GLVF	Globe Valve Flanged	DN	15-40	Body:	ASTM	A216-WCB/WCC, A105
				Trim:	AISI	316 (L) + Stellite 6
		DN	50-150	Body:	ASTM	A216-WCB/WCC, A105
				Trim:	AISI	410

* MISCELLANEOUS

GKSW	Gasket, Spiral Wound	DN	15-400	AISI	316, 316L, Graphite Filled	
					CS Centring-, SS Inner-Ring	
ORFS	Orifice Flange Set	DN	50-400		ASTM	A105
STBT	Stud Bolt with Nuts		_____	Studs:	ASTM	A193-B7
				Nuts:	ASTM	A194-2H

Class No.: GN10	Page: 3	Content: Piping Components

ITEM DESCRIPTION			NOMINAL PIPE SIZE 15	20	25	40	50	80	100	150	200	250	300	350	400
* PIPE															
Pipe		74.30.21/31	*	*	*	*	*	*	*	*	*	*	*	*	*
Pipe Nipple 50 mm		76.30.57	*	*	*	*									
* FLANGES															
Blind Flange		76.62.10	*	*	*	*	*	*	*	*	*	*	*	*	*
Spectacle Blind Flange		76.88.06	*	*	*	*	*	*	*	*	*	*	*	*	*
Spacer Ring Type (ANS Flanges)		76.88.16	*	*	*	*	*	*	*	*	*	*	*	*	*
Welding Neck Flange		76.62.79	*	*	*	*	*	*	*	*	*	*	*	*	*
* FITTINGS															
Cap	Butt-Weld. End	76.30.18	*	*	*	*	*	*	*	*	*	*	*	*	*
Elbow 45 Deg.	Butt-Weld. End	76.30.38	*	*	*	*	*	*	*	*	*	*	*	*	*
Elbow 90 Deg.	Butt-Weld. End	76.30.39/40	*	*	*	*	*	*	*	*	*	*	*	*	*
Equal Tee	Butt-Weld. End	76.30.84	*	*	*	*	*	*	*	*	*	*	*	*	*
Elbow 45 Deg.	Socket-Weld. End	76.34.38	*	*	*	*									
Elbow 90 Deg.	Socket-Weld. End	76.34.39	*	*	*	*									
Equal Tee	Socket-Weld. End	76.34.84	*	*	*	*									
Coupling	Socket-Weld. End	76.34.28	*	*	*	*									
Cap	Socket-Weld. End	76.34.18	*	*	*	*									
* VALVES															
Check Valve Flanged		75.37.16	*	*	*	*									
				*	*	*	*								
Gate Valve Flanged		75.37.36	*	*	*	*									
				*	*	*	*	*	*	*	*	*			
Globe Valve Flanged		75.37.46	*	*	*	*									
				*	*	*	*	*	*	*	*	*			
* MISCELLANEOUS															
Gasket, Spiral Wound		85.41.37	*	*	*	*	*	*	*	*	*	*	*	*	*
Orifice Flange Set		60.88.52					*	*	*	*	*	*	*	*	*

Class No.:	GN10	Page:	4	Content:	Reducing Piping Components

Run		Br.	BROB 76.80.05	RECB 76.30.72	REEB 76.30.73	TERB 76.30.85	TERS 76.34.85
20	×	15		*	*	*	*
25	×	15		*	*	*	*
25	×	20		*	*	*	*
40	×	15		*	*	*	*
40	×	20		*	*	*	*
40	×	25		*	*	*	*
50	×	20		*	*	*	
50	×	25		*	*	*	
50	×	40		*	*	*	
80	×	40		*	*	*	
80	×	50	*	*	*	*	
100	×	40		*	*		
100	×	50	*	*	*	*	
100	×	80	*	*	*	*	
150	×	50	*				
150	×	80	*	*	*	*	
150	×	100	*	*	*	*	
200	×	50	*				
200	×	80	*				
200	×	100	*	*	*		
200	×	150	*	*	*	*	
250	×	50	*				
250	×	80	*				
250	×	100	*	*	*		
250	×	150	*	*	*	*	
250	×	200	*	*	*	*	
300	×	50	*				
300	×	80	*				
300	×	100	*				
300	×	150	*	*	*	*	
300	×	200	*	*	*	*	
300	×	250	*	*	*	*	
350	×	50	*				
350	×	80	*				
350	×	100	*				
350	×	150	*	*	*	*	
350	×	200	*	*	*	*	
350	×	250	*	*	*	*	
350	×	300	*	*	*	*	

Run		Br.	BROB 76.80.05	RECB 76.30.72	REEB 76.30.73	TERB 76.30.85
400	×	50	*			
400	×	80	*			
400	×	100	*			
400	×	150	*	*	*	*
400	×	200	*	*	*	*
400	×	250	*	*	*	*
400	×	300	*	*	*	*
400	×	350	*	*	*	*

COMP. NAME	DESCRIPTION
BROS	Branch Fitting Socket-Weld. Outlet
BROB	Branch Outlet Red. Butt-Weld
RECB	Reducer Conc. Butt-Weld. End
REEB	Reducer Ecc. Butt-Weld. End
TERB	Tee Reducing Butt-Weld. End
TERS	Tee Reducing Socket-Weld. End

RUN	Br.	BROS 76.80.26
40-150	15	*
200-400		*
50-80	20	*
100-400		*
50	25	*
80-100		*
150-400		*
80-100	40	*
150-300		*
350-400		*

Class No.:	GN10	Page:	5	Content:	Bolting and Assemblies

BOLT SET FLANGED JOINTS

DN	No.	Inch		mm	81.38.61
15	4	3/4	×	110	*
20	4	3/4	×	110	*
25	4	7/8	×	130	*
40	4	1	×	140	*
50	8	7/8	×	150	*
80	8	7/8	×	150	*
100	8	11/8	×	170	*
150	12	11/8	×	190	*
200	12	13/8	×	220	*
250	16	13/8	×	240	*
300	20	13/8	×	250	*
350	20	11/2	×	275	*
400	20	15/8	×	290	*

BOLT SET SPECTACLE/SPACER

DN	No.	Inch		mm	81.38.61
15	4	3/4	×	120	*
20	4	3/4	×	130	*
25	4	7/8	×	140	*
40	4	1	×	160	*
50	8	7/8	×	160	*
80	8	7/8	×	170	*
100	8	11/8	×	195	*
150	12	11/8	×	230	*
200	12	13/8	×	265	*
250	16	13/8	×	290	*
300	20	13/8	×	310	*
350	20	11/2	×	345	*
400	20	15/8	×	360	*

BOLT SET ORIFICE FLANGES

DN	No.	Inch		mm	81.38.61
15	4	7/8	×	150	*
20	4	7/8	×	150	*
25	4	7/8	×	150	*
40	4	1	×	160	*
50	8	7/8	×	160	*
80	8	7/8	×	160	*
100	8	11/8	×	180	*
150	12	11/8	×	210	*
200	12	13/8	×	240	*
250	16	13/8	×	250	*
300	20	13/8	×	275	*
350	20	11/2	×	300	*
400	20	15/8	×	305	*

* DRAIN POINT Fig. 0I

Run	DN 15-25	Br	DN 15	No.
Branch: Table Page 1				1
Blind Flange				1
Gasket Spiral Wound				2
Gate Valve Flanged				1
Stud Bolt with Nuts				8
Welding Neck Flange				1

* DRAIN POINT Fig. 0I

Run	DN 40-40	Br	DN 20	No.
Branch: Table Page 1				1
Blind Flange				1
Gasket Spiral Wound				2
Gate Valve Flanged				1
Stud Bolt with Nuts				8
Welding Neck Flange				1

* DRAIN POINT Fig. 0J

Run	DN 50-400	Br	DN 20	No.
Branch: Table Page 1				1
Blind Flange				1
Gasket Spiral Wound				2
Gate Valve Flanged				1
Pipe Nipple 50 mm				1
Stud Bolt with Nuts				8
Welding Neck Flange				1

* VENT POINT Fig. 1I

Run	DN 15-25	Br	DN 15	No.
Branch: Table Page 1				1
Blind Flange				1
Gasket Spiral Wound				2
Globe Valve Flanged				1
Stud Bolt with Nuts				8
Welding Neck Flange				1

* VENT POINT Fig. 1I

Run	DN 40-40	Br	DN 20	No.
Branch: Table Page 1				1
Blind Flange				1
Gasket Spiral Wound				2
Globe Valve Flanged				1
Stud Bolt with Nuts				8
Welding Neck Flange				1

* VENT POINT Fig. 1J

Run	DN 50-400	Br	DN 20	No.
Branch: Table Page 1				1
Blind Flange				1
Gasket Spiral Wound				2
Globe Valve Flanged				1
Pipe Nipple 50 mm				1
Stud Bolt with Nuts				8
Welding Neck Flange				1

Class No.: GN14	Page: 1	Content: General
Base Material: Carbon Steel	First Issue: Revision:	
Rating: PN 150 (Class 900)	Date:	
Corrosion Allowance: 1 mm	Sign:	

Temperature °C		0	50	100	150	200	250	300	350	400
Pressure Barg.	DN 15-400	153.0	150.1	139.1	135.7	131.3	125.0	116.0	110.8	103.3

TABLEOFSCHEDULES

DN	Schedule
15	80
20	80
25	80
40	80
50	80
80	80
100	80
150	120
200	120
250	120
300	120
350	120
400	120

BRANCH CONNECTIONS 90 DEGREES

Run Size	BRANCH SIZE 15	20	25	40	50	80	100	150	200	250	300	350	400
400	C	C	C	C	E	E	E	E	E	E	E	E	A
350	C	C	C	C	E	E	E	E	E	E	E	A	
300	C	C	C	C	E	E	E	E	E	E	A		
250	C	C	C	C	E	E	E	E	E	A			
200	C	C	C	C	E	E	E	E	A				
150	C	C	C	C	E	E	E	A					
100	C	C	C	C	E	E	A						
80	C	C	C	C	E	A							
50	C	C	C	B	A								
40	C	B	B	A									
25	B	B	A										
20	B	A											
15	A												

Notes:

- Design limits are acc. flange rating ANSI B16.5 Material Group 1.1
- Piston type check valves for horizontal mounting only.
- Application of other types of branch connections is subject to company approval.

CODE	EXPLANATIONOFCHARACTERS
A	Equal tee
B	Reducing tee
C	Branch fitting outlet socket-weld
E	Branch outlet reducing butt-weld

Class No.: GN14	Page: 2	Content: Material Descriptions

* PIPE

PIPE	Pipe	DN	15-400	ASTM	A106-B
PNPP	Pipe Nipple 50 mm	DN	15-40	ASTM	A106-B

* FLANGES

BLFL	Blind Flange	DN	15-400	ASTM	A105
SBFL	Spectacle Blind Flange	DN	15-400	ASTM	A516-60
SPRT	Spacer Ring Type (ANS Flanges)	DN	15-400	ASTM	A516-60
WNFL	Welding Neck Flange	DN	15-400	ASTM	A105

* FITTINGS

CAPB	Cap	Butt-Weld. End	DN	15-400	ASTM	A234-WPB
E45B	Elbow 45 Deg.	Butt-Weld. End	DN	15-400	ASTM	A234-WPB
E90B	Elbow 90 Deg.	Butt-Weld. End	DN	15-400	ASTM	A234-WPB
TEEB	Equal Tee	Butt-Weld. End	DN	15-400	ASTM	A234-WPB
E45S	Elbow 45 Deg.	Socket-Weld. End	DN	15-40	ASTM	A105
E90S	Elbow 90 Deg.	Socket-Weld. End	DN	15-40	ASTM	A105
TEES	Equal Tee	Socket-Weld. End	DN	15-40	ASTM	A105
COUS	Coupling	Socket-Weld. End	DN	15-40	ASTM	A105
CAPS	Cap	Socket-Weld. End	DN	15-40	ASTM	A105

* REDUCING FITTINGS

BROS	Branch Fitting Socket-Weld. Outlet	DN	15-50	ASTM	A105
BROB	Branch Outlet Red. Butt-Weld.	DN	80-400	ASTM	A105
RECB	Reducer Conc. Butt-Weld. End	DN	20-400	ASTM	A234-WPB
REEB	Reducer Ecc. Butt-Weld. End	DN	20-400	ASTM	A234-WPB
TERB	Tee Reducing Butt-Weld. End	DN	20-400	ASTM	A234-WPB
TERS	Tee Reducing Socket-Weld. End	DN	20-40	ASTM	A105

Note:

For full material description see relevant MESC buying description.

* VALVES

CHVB	Check Valve Butt-Weld. End	DN	15-400	Body: ASTM Trim: AISI	A216-WCB/WCC, A105 316 (L) + Stellite 6
GAVB	Gate Valve Butt-Weld. End	DN	15-400	Body: ASTM Trim: AISI	A216WCB/WCC,A105 316 (L) + Stellite 6
GAVF	Gate Valve Flanged	DN	15-50	Body: ASTM Trim: AISI	A216-WCB/WCC, A105 316 (L) + Stellite 6
GLVB	Globe Valve Butt-Weld. End	DN	15-150	Body :ASTM Trim: AISI	A216-WCB/WCC, A105 316 (L) + Stellite 6

* MISCELLANEOUS

GKSW	Gasket, Spiral Wound	DN	15-400	AISI	316, 316L, Graphite Filled CS Centring-, SS Inner-Ring
ORFS	Orifice Flange Set	DN	50-400	ASTM	A105
STBT	Stud Bolt with Nuts		---	Studs: ASTM Nuts: ASTM	A193-B7 A194-2H

Class No.: GN14	Page: 3	Content: Piping Components

ITEM DESCRIPTION			NOMINAL PIPE SIZE 15	20	25	40	50	80	100	150	200	250	300	350	400
* PIPE															
Pipe		74.30.21/31	*	*	*	*	*	*	*	*	*	*	*	*	*
Pipe Nipple 50 mm		76.30.57	*	*	*	*									
* FLANGES															
Blind Flange		76.62.10	*	*	*	*	*	*	*	*	*	*	*	*	*
Spectacle Blind Flange		76.88.06	*	*	*	*	*	*	*	*	*	*	*	*	*
Spacer Ring Type (ANS Flanges)		76.88.16	*	*	*	*	*	*	*	*	*	*	*	*	*
Welding Neck Flange		76.62.79	*	*	*	*	*	*	*	*	*	*	*	*	*
* FITTINGS															
Cap	Butt-Weld. End	76.30.18	*	*	*	*	*	*	*	*	*	*	*	*	*
Elbow 45 Deg.	Butt-Weld. End	76.30.38	*	*	*	*	*	*	*	*	*	*	*	*	*
Elbow 90 Deg.	Butt-Weld. End	76.30.39/40	*	*	*	*	*	*	*	*	*	*	*	*	*
Equal Tee	Butt-Weld. End	76.30.84	*	*	*	*	*	*	*	*	*	*	*	*	*
Elbow 45 Deg.	Socket-Weld. End	76.34.38	*	*	*	*									
Elbow 90 Deg.	Socket-Weld. End	76.34.39	*	*	*	*									
Equal Tee	Socket-Weld. End	76.34.84	*	*	*	*									
Coupling	Socket-Weld. End	76.34.28	*	*	*	*									
Cap	Socket-Weld. End	76.34.18	*	*	*	*									
* VALVES															
Check Valve Butt-Weld. End		75.56.16	*	*	*	*	*	*	*	*	*	*	*	*	*
Gate Valve Butt-Weld. End		75.56.36	*	*	*	*	*	*	*	*	*	*	*	*	*
Globe Valve Butt-Weld. End		75.56.46	*	*	*	*	*	*	*	*					
Gate Valve Flanged		75.20.04	*	*	*	*	*								
* MISCELLANEOUS															
Gasket, Spiral Wound		85.41.37	*	*	*	*	*	*	*	*	*	*	*	*	*
Orifice Flange Set		60.88.52				*	*	*	*	*	*	*	*	*	*

Class No.: GN14	Page: 4	Content: Reducing Piping Components

Ru Br	BROB .76.80.05	RECB 76.30.7	REEB 7 6.30.73	TERB 76.30.85	TERS 76.34.85
20×15		*	*	*	*
25×15		*	*	*	*
25×20		*	*	*	*
40×15				*	*
40×20		*	*	*	*
40×25		*	*	*	*
50×20				*	
50×25		*	*	*	
50×40		*	*	*	
80×40		*	*	*	
80×50	*	*	*	*	
100×40	*	*	*	*	
100×50	*	*	*	*	
100×80	*	*	*	*	
150×50	*				
150×80	*	*	*		
150×100	*	*	*	*	
200×50	*				
200×80	*				
200×100	*	*	*		
200×150	*	*	*	*	
250×50	*				
250×80	*				
250×100	*	*	*		
250×150	*	*	*	*	
250×200	*	*	*	*	
300×50	*				
300×80	*				
300×100	*				
300×150	*	*	*	*	
300×200	*	*	*	*	
300×250	*	*	*	*	
350×50	*				
350×80	*				
350×100	*				
350×150	*	*	*	*	
350×200	*	*	*	*	
350×250	*	*	*	*	
350×300	*	*	*	*	

Run Br.	BROB 76.80.05	RECB 76.30.72	REEB 76.30.73	TERB 76.30.85
400×50	*			
400×80	*			
400×100	*			
400×150	*	*	*	*
400×200	*	*	*	*
400×250	*	*	*	*
400×300	*	*	*	*
400×350	*	*	*	*

COMP. NAME	DESCRIPTION
BROS	Branch Fitting Socket-Weld. Outlet
BROB	Branch Outlet Red. Butt-Weld
RECB	Reducer Conc. Butt-Weld. End
REEB	Reducer Ecc. Butt-Weld. End
TERB	Tee Reducing Butt-Weld. End
TERS	Tee Reducing Socket-Weld. End

RUN	Br.	BROS 76.80.26
40-150	15	*
200-400		*
50-80	20	*
100-400		*
50	25	*
80-100		*
150-400		*
80-100	40	*
150-300		*
350-400		*

Class No.: GN14	Page: 5	Content: Bolting and Assemblies

BOLTSETFLANGEDJOINTS

DN	No.	Inch	MM	81.38.61
15	4	¾ ×	110	*
20	4	¾ ×	110	*
25	4	7/8 ×	130	*
40	4	1 ×	140	*
50	8	7/8 ×	150	*
80	8	7/8 ×	150	*
100	8	11/8 ×	170	*
150	12	11/8 ×	190	*
200	12	13/8 ×	220	*
250	16	13/8 ×	240	*
300	20	13/8 ×	250	*
350	20	11/2 ×	275	*
400	20	15/8 ×	290	*

BOLT SET SPECTACLE/SPACER

DN	No.	Inch	MM	81.38.61
15	4	¾ ×	120	*
20	4	¾ ×	130	*
25	4	7/8 ×	140	*
40	4	1 ×	160	*
50	8	7/8 ×	160	*
80	8	7/8 ×	170	*
100	8	11/8 ×	195	*
150	12	11/8 ×	230	*
200	12	13/8 ×	265	*
250	16	13/8 ×	290	*
300	20	13/8 ×	310	*
350	20	11/2 ×	345	*
400	20	15/8 ×	360	*

BOLT SET ORIFICE FLANGES

DN	No.	Inch	mm	81.38.61
15	4	7/8 ×	150	*
20	4	7/8 ×	150	*
25	4	7/8 ×	150	*
40	4	1 ×	160	*
50	8	7/8 ×	160	*
80	8	7/8 ×	160	*
100	8	11/8 ×	180	*
150	12	11/8 ×	210	*
200	12	13/8 ×	240	*
250	16	13/8 ×	250	*
300	20	13/8 ×	275	*
350	20	11/2 ×	300	*
400	20	15/8 ×	305	*

* DRAIN POINT Fig. 0M

Run DN 15-25 Br DN 15
Run DN 40 Br DN 20

	No.
Branch: Table Page 1	1
Blind Flange	1
Gasket Spiral Wound	1
Gate Valve Flanged	1
Stud Bolt with Nuts	4
Welding Neck Flange	1

* DRAIN POINT Fig. 0N

Run DN 50-400 Br DN 20 No

Branch: Table Page 1	1
Blind Flange	1
Gasket Spiral Wound	1
Gate Valve Flanged	1
Stud Bolt with Nuts	4
Welding Neck Flange	1

* VENT POINT Fig. 1M

Run DN 15-25 Br DN 15
Run DN 40 Br DN 20

	No.
Branch: Table Page 1	1
Blind Flange	1
Gasket Spiral Wound	1
Globe Valve Butt-Weld End	1
Stud Bolt with Nuts	4
Welding Neck Flange	1

VENT POINT Fig. 1N

Run DN 50-400 Br DN 20

	No.
Branch: Table Page 1	1
Blind Flange	1
Gasket Spiral Wound	1
Globe Valve Butt-Weld End	1
Pipe Nipple 50 mm	1
Stud Bolt with Nuts	4
Welding Neck Flange	1

Class No.: GP02	Page: 1	Content: General
Base Material: Alloy Steel (1.25 Cr. - 0.5 Mo)	First Issue: Revision:	
Rating: PN 150 (Class 900)	Date:	
Corrosion Allowance: 1 mm	Sign:	

Temperature °C		0	50	100	150	200	250	300	350	400	450
Pressure Barg.	DN 15-400	155.1	153.3	146.2	139.2	136.4	133.3	127.2	120.7	109.7	101.3

DN	Schedule
15	80
20	80
25	80
40	80
50	80
80	80
100	80
150	120
200	120
250	120
300	120
350	120
400	120

BRANCH CONNECTIONS 90 DEGREES

Run Size	BRANCH SIZE 15	20	25	40	50	80	100	150	200	250	300	350	400
400	C	C	C	C	E	E	E	E	E	E	E	E	A
350	C	C	C	C	E	E	E	E	E	E	E	A	
300	C	C	C	C	E	E	E	E	E	E	A		
250	C	C	C	C	E	E	E	E	E	A			
200	C	C	C	C	E	E	E	E	A				
150	C	C	C	C	E	E	E	A					
100	C	C	C	C	E	E	A						
80	C	C	C	C	E	A							
50	C	C	C	c	A								
40	C	c	c	A									
25	B	B	A										
20	B	A											
15	A												

Notes:

- Design limits are acc. flange rating ANSI B16.5 Material Group 1.9.
- Piston type check valves for horizontal mounting only
- Application of other types of branch connections is subject to company approval

CODE	EXPLANATIONOFCHARACTERS
A	Equal tee
B	Reducing tee
C	Branch fitting outlet socket-weld
E	Branch outlet reducing butt-weld

Class No.: GP02	Page: 2	Content: Material Descriptions

* PIPE

PIPE	Pipe	DN	15-400	ASTM	A335P11(Seamless)
PNPP	Pipe Nipple 50 mm	DN	15-40	ASTM	A335-P11 (Seamless)

* FLANGES

BLFL	Blind Flange	DN	15-400	ASTM	A182-F11
SBFL	Spectacle Blind Flange	DN	15-400	ASTM	A387-11 CL.2
SPRT	Spacer Ring Type (ANS Flanges)	DN	15-400	ASTM	A387-11 CL.2
WNFL	Welding Neck Flange	DN	15-400	ASTM	A182-F11

* FITTINGS

CAPB	Cap	Butt-Weld. End	DN	15-400	ASTM	A234-WP11
E45B	Elbow 45 Deg.	Butt-Weld. End	DN	15-400	ASTM	A234-WP11
E90B	Elbow 90 Deg.	Butt-Weld. End	DN	15-400	ASTM	A234-WP11
TEEB	Equal Tee	Butt-Weld. End	DN	15-400	ASTM	A234-WP11
E45S	Elbow 45 Deg.	Socket-Weld. End	DN	15-40	ASTM	A182-F11
E90S	Elbow 90 Deg.	Socket-Weld. End	DN	15-40	ASTM	A182-F11
TEES	Equal Tee	Socket-Weld. End	DN	15-40	ASTM	A182-F11
COUS	Coupling	Socket-Weld. End	DN	15-40	ASTM	A182-F11
CAPS	Cap	Socket-Weld. End	DN	15-40	ASTM	A182-F11

* REDUCING FITTINGS

BROS	Branch Fitting Socket-Weld. Outlet	DN	15-50	ASTM	A182-F11
BROB	Branch Outlet Red. Butt-Weld.	DN	80-400	ASTM	A182-F11
RECB	Reducer Conc. Butt-Weld. End	DN	20-400	ASTM	A234-WP11
REEB	Reducer Ecc. Butt-Weld. End	DN	20-400	ASTM	A234-WP11
TERB	Tee Reducing Butt-Weld. End	DN	20-25	ASTM	A234-WP11
TERS	Tee Reducing Socket-Weld. End	DN	20-40	ASTM	A182-F11

Note:
For full material description see relevant MESC buying description.

* VALVES

CHVF	Check Valve Butt-Weld. End	DN	15-300	Body:	ASTM	A217-WC6, A182-F11
				Trim:	AISI	316 (L) + Stellite 6
GAVB	Gate Valve Butt-Weld. End	DN	15-400	Body:	ASTM	A217-WC6, A182-F11
				Trim:	AISI	316 (L) + Stellite 6
GLVF	Globe Valve Butt-Weld. End	DN	15-150	Body:	ASTM	A217-WC6, A182-F11
				Trim:	AISI	316 (L) + Stellite 6
GAVF	Gate Valve Flanged	DN	15-50	Body:	ASTM	A217-WC6, A182-F11
				Trim:	AISI	316 (L) + Stellite 6

* MISCELLANEOUS

GKSW	Gasket, Spiral Wound	DN	15-400	AISI 304, Graphited Filled, CS Centring-, AISI 304 Inner-Ring	
ORFS	Orifice Flange Set	DN	50-400	ASTM	A182-F11
STBT	Stud Bolt with Nuts	----	Studs:	ASTM	A193-B16
			Nuts:	ASTM	A194-4

Class No.: GP02	Page: 2	Content: Material Descriptions

ITEM DESCRIPTION			NOMINAL PIPE SIZE 15	20	25	40	50	80	100	150	200	250	300	350	400
* PIPE															
Pipe		74.33.11	*	*	*	*	*	*	*	*	*	*	*	*	*
* FLANGES															
Blind Flange		76.64.10	*	*	*	*	*	*	*	*	*	*	*	*	*
Spectacle Blind Flange		76.88.07	*	*	*	*	*	*	*	*	*	*	*	*	*
Spacer Ring Type (ANS Flanges)			*	*	*	*	*	*	*	*	*	*	*	*	*
Welding Neck Flange		76.64.80	*	*	*	*	*	*	*	*	*	*	*	*	*
* FITTINGS															
Cap	Butt-Weld. End	76.32.18	*	*	*	*	*	*	*	*	*	*	*	*	*
Elbow 45 Deg.	Butt-Weld. End	76.32.38	*	*	*	*	*	*	*	*	*	*	*	*	*
Elbow 90 Deg.	Butt-Weld. End	76.32.39	*	*	*	*	*	*	*	*	*	*	*	*	*
Equal Tee	Butt-Weld. End	76.32.84	*	*	*	*	*	*	*	*	*	*	*	*	*
Elbow 45 Deg.	Socket-Weld. End	76.36.38	*	*	*	*									
Elbow 90 Deg.	Socket-Weld. End	76.36.39	*	*	*	*									
Equal Tee	Socket-Weld. End	76.36.80	*	*	*	*									
Coupling	Socket-Weld. End	76.36.28	*	*	*	*									
Cap	Socket-Weld. End	76.36.18	*	*	*	*									
* VALVES															
Check Valve Butt-Weld. End		75.59.10	*	*	*	*	*	*	*	*	*	*	*		
Gate Valve Butt-Weld. End		75.59.30	*	*	*	*	*	*	*	*	*	*	*	*	*
Globe Valve Butt-Weld. End		75.59.40	*	*	*	*	*	*	*	*					
Gate Valve Flanged		75.41.33	*	*	*	*	*								
* MISCELLANEOUS															
Gasket, Spiral Wound		85.41.31	*	*	*	*	*	*	*	*	*	*	*	*	*
Orifice Flange Set		60.88.52				*	*	*	*	*	*	*	*	*	*

Class No.: GP02	Page: 4	Content: Reducing Piping Components

Ru Br	BROB .76.80.05	RECB 76.30.7	REEB 7 6.30.73	TERB 76.30.85	TERS 76.34.85
20×15		*	*	*	*
25×15		*	*	*	*
25×20		*	*	*	*
40×20		*			*
40×25		*	*		*
50×25		*	*		
50×40		*			
80×40			*	*	
80×50	*	*	*		
100×50	*	*	*		
100×80	*	*	*		
150×50	*				
150×80	*	*	*		
150×100	*	*	*		
200×50		*			
200×80	*				
200×100	*	*	*		
200×150	*	*	*		
250×50	*				
250×80	*				
250×100	*				
250×150	*	*	*		
250×200	*	*	*		
300×50	*				
300×80	*				
300×150	*	*	*		
300×200	*	*	*		
300×250	*	*	*		
350×50	*				
350×80	*				
350×150	*				
350×200	*	*	*		
350×250	*	*	*		
350×300	*	*	*		

Run Br.	BROB 76.32.70	RECB 76.32.71	REEB
400×50	*		
400×80	*		
400×150	*		
400×200	*	*	*
400×250	*	*	*
400×300	*	*	*
400×350	*	*	*

COMP. NAME	DESCRIPTION
BROS	Branch Fitting Socket-Weld. Outlet
BROB	Branch Outlet Red. Butt-Weld
RECB	Reducer Conc. Butt-Weld. End
REEB	Reducer Ecc. Butt-Weld. End
TERB	Tee Reducing Butt-Weld. End
TERS	Tee Reducing Socket-Weld. End

Run	Br.	BROS 76.80.2
40-150	15	*
200-400		*
50-80	20	*
100-400		*
50	25	*
80-100		*
150-400		*
80-100	40	*
150-300		*
350-400		*

Class No.: GP02	Page: 5	Content: Bolting and Assemblies

BOLTSETFLANGEDJOINTS

DN	No.	Inch	MM	81.38.61
15	4	¾ ×	110	*
20	4	¾ ×	110	*
25	4	7/8 ×	125	*
40	4	1 ×	140	*
50	8	7/8 ×	145	*
80	8	7/8 ×	145	*
100	8	11/8 ×	170	*
150	12	11/8 ×	190	*
200	12	13/8 ×	220	*
250	16	13/8 ×	235	*
300	20	13/8 ×	250	*
350	20	11/2 ×	275	*
400	20	15/8 ×	285	*

BOLT SET SPECTACLE/SPACER

DN	No.	Inch	MM	81.38.61
15	4	¾ ×	115	*
20	4	¾ ×	125	*
25	4	7/8 ×	140	*
40	4	1 ×	160	*
50	8	7/8 ×	160	*
80	8	7/8 ×	165	*
100	8	11/8 ×	195	*
150	12	11/8 ×	230	*
200	12	13/8 ×	265	*
250	16	13/8 ×	285	*
300	20	13/8 ×	310	*
350	20	11/2 ×	345	*
400	20	15/8 ×	355	*

BOLT SET ORIFICE FLANGES

DN	No.	Inch	mm	81.38.61
15	4	7/8 ×	150	*
20	4	7/8 ×	150	*
25	4	7/8 ×	150	*
40	4	1 ×	160	*
50	8	7/8 ×	160	*
80	8	7/8 ×	160	*
100	8	11/8 ×	180	*
150	12	11/8 ×	210	*
200	12	13/8 ×	240	*
250	16	13/8 ×	250	*
300	20	13/8 ×	275	*
350	20	11/2 ×	300	*
400	20	15/8 ×	305	*

* DRAIN POINT Fig. 0I

Run DN 15-25 Br DN 15

	No.
Branch: Table Page 1	1
Blind Flange	1
Gasket Spiral Wound	1
Gate Valve Butt-Weld. End	1
Pipe Nipple 50 mm	1
Stud Bolt with Nuts	4
Welding Neck Flange	1

* DRAIN POINT Fig. 0I

Run DN 40-40 Br DN 20

	No.
Branch: Table Page 1	1
Blind Flange	1
Gasket Spiral Wound	1
Gate Valve Butt-Weld. End	1
Pipe Nipple 50 mm	1
Stud Bolt with Nuts	4
Welding Neck Flange	1

Class No.: GP06	Page: 1	Content: General
Base Material: Alloy Steel (1.25 Cr. - 0.5 Mo)	First Issue: Revision:	
Rating: PN 150 (Class 900)	Date:	
Corrosion Allowance: 1 mm	Sign:	

Temperature °C	0	50	100	150	200	250	300	350	400	450	500
Pressure Barg. DN 15-400	155.1	153.3	146.2	139.2	136.4	133.3	127.2	120.7	109.7	101.3	83.3

DN	Schedule
15	80
20	80
25	80
40	80
50	80
80	80
100	80
150	120
200	120
250	120
300	120
350	120
400	120

BRANCH CONNECTIONS 90 DEGREES

Run

BRANCH SIZE

Size	15	20	25	40	50	80	100	150	200	250	300	350	400
400	C	C	C	C	E	E	E	E	E	E	E	E	A
350	C	C	C	C	E	E	E	E	E	E	A		
300	C	C	C	C	E	E	E	E	E	A			
250	C	C	C	C	E	E	E	E	A				
200	C	C	C	C	E	E	E	A					
150	C	C	C	C	E	E	A						
100	C	C	C	C	E	E	A						
80	C	C	C	C	E	A							
50	C	C	C	B	A								
40	C	B	B	A									
25	B	B	A										
20	B	A											
15	A												

* VENT POINT	Fig. 1M	No.
Run DN 50-400 Br DN 20		
Branch: Table Page 1		1
Blind Flange		1
Gasket Spiral Wound		1
Gate Valve Butt-Weld. End		1
Pipe Nipple 50 mm		1
Stud Bolt with Nuts		4
Welding Neck Flange		1

VENT POINT	Fig. 1N	No.
Run DN 15-25 Br DN 15		
Branch: Table Page 1		1
Blind Flange		1
Gasket Spiral Wound		1
Globe Valve Butt-Weld. End		1
Pipe Nipple 50 mm		1
Stud Bolt with Nuts		4
Welding Neck Flange		1

VENT POINT	Fig. 1N	No.
Run DN 40-40 Br DN 20		
Branch: Table Page 1		1
Blind Flange		1
Gasket Spiral Wound		1
Globe Valve Butt-Weld. End		1
Pipe Nipple 50 mm		1
Stud Bolt with Nuts		4
Welding Neck Flange		1

* VENT POINT	Fig. 1N	No.
Run DN 50-400 Br DN 20		
Branch: Table Page 1		1
Blind Flange		1
Gasket Spiral Wound		1
Globe Valve Butt-Weld. End		1
Pipe Nipple 50 mm		1
Stud Bolt with Nuts		4
Welding Neck Flange		1

Notes:
- Design limits are acc. flange rating ANSI B16.5 Material Group 1.9.
- Application of other types of branch connections is subject to company approval.
- Piston type check valves for horizontal mounting only.

CODE	EXPLANATIONOFCHARACTERS
A	Equal tee
B	Reducing tee
C	Branch fitting outlet socket-weld
E	Branch outlet reducing butt-weld

Class No.: GP06	Page: 2	Content: Material Descriptions

* PIPE

PIPE	Pipe	DN	15-400	ASTM	A335P11(Seamless)
PNPP	Pipe Nipple 50 mm	DN	15-40	ASTM	A335-P11 (Seamless)

* FLANGES

BLFL	Blind Flange	DN	15-400	ASTM	A182-F11
SBFL	Spectacle Blind Flange	DN	15-400	ASTM	A387-11 CL.2
SPRT	Spacer Ring Type (ANS Flanges)	DN	15-400	ASTM	A387-11 CL.2
WNFL	Welding Neck Flange	DN	15-400	ASTM	A182-F11

* FITTINGS

CAPB	Cap	Butt-Weld. End	DN	15-400	ASTM	A234-WP11
E45B	Elbow 45 Deg.	Butt-Weld. End	DN	15-400	ASTM	A234-WP11
E90B	Elbow 90 Deg.	Butt-Weld. End	DN	15-400	ASTM	A234-WP11
TEEB	Equal Tee	Butt-Weld. End	DN	15-400	ASTM	A234-WP11
E45S	Elbow 45 Deg.	Socket-Weld. End	DN	15-40	ASTM	A182-F11
E90S	Elbow 90 Deg.	Socket-Weld. End	DN	15-40	ASTM	A182-F11
TEES	Equal Tee	Socket-Weld. End	DN	15-40	ASTM	A182-F11
COUS	Coupling	Socket-Weld. End	DN	15-40	ASTM	A182-F11
CAPS	Cap	Socket-Weld. End	DN	15-40	ASTM	A182-F11

* VALVES

CHVB	Check Valve Butt-Weld. End	DN	15-300	Body:	ASTM	A217-WC6, A182-F11
				Trim:	AISI	316, 316L or Body Mat.
				+ Stellite-6 (Hydrogen)		
GAVB	Gate Valve Butt-Weld. End	DN	15-400	Body:	ASTM	A217-WC6, A182-F11
				Trim:	AISI	316, 316L or Body Mat.
				+ Stellite-6 (Hydrogen)		
GLVB	Globe Valve Butt-Weld. End	DN	15-150	Body:	ASTM	A217-WC6, A182-F11
				Trim:	AISI	316, 316L or Body Mat.
				+ Stellite-6 (Hydrogen)		

* MISCELLANEOUS

GKSW	Gasket, Spiral Wound	DN	15-400	AISI 316, 316L Graphited Filled,	
				CS Centring-, SS Inner-Ring	
ORFS	Orifice Flange Set	DN	50-400	ASTM	A182-F11
STBT	Stud Bolt with Nuts	----	Studs:	ASTM	A193-B16
			Nuts:	ASTM	A194-8C

* REDUCING FITTINGS

BROS	Branch Fitting Socket-Weld. Outlet	DN	15-50	ASTM	A182-F11
BROB	Branch Outlet Red. Butt-Weld.	DN	80-400	ASTM	A182-F11
RECB	Reducer Conc. Butt-Weld. End	DN	20-400	ASTM	A234-WP11
REEB	Reducer Ecc. Butt-Weld. End	DN	20-400	ASTM	A234-WP11
TERB	Tee Reducing Butt-Weld. End	DN	20-25	ASTM	A234-WP11
TERS	Tee Reducing Socket-Weld. End	DN	20-40	ASTM	A182-F11

Note:
For full material description see relevant MESC buying description.

Class No.: GP02	Page: 2	Content: Material Descriptions

ITEM DESCRIPTION			NOMINAL PIPE SIZE 15	20	25	40	50	80	100	150	200	250	300	350	400
* PIPE															
Pipe		74.33.11	*	*	*	*	*	*	*	*	*	*	*	*	*
* FLANGES															
Blind Flange		76.64.10	*	*	*	*	*	*	*	*	*	*	*	*	*
Spectacle Blind Flange		76.88.07	*	*	*	*	*	*	*	*	*	*	*	*	*
Spacer Ring Type (ANS Flanges)			*	*	*	*	*	*	*	*	*	*	*	*	*
Welding Neck Flange		76.64.80	*	*	*	*	*	*	*	*	*	*	*	*	*
* FITTINGS															
Cap	Butt-Weld. End	76.32.18	*	*	*	*	*	*	*	*	*	*	*	*	*
Elbow 45 Deg.	Butt-Weld. End	76.32.38	*	*	*	*	*	*	*	*	*	*	*	*	*
Elbow 90 Deg.	Butt-Weld. End	76.32.39	*	*	*	*	*	*	*	*	*	*	*	*	*
Equal Tee	Butt-Weld. End	76.32.84	*	*	*	*	*	*	*	*	*	*	*	*	*
Elbow 45 Deg.	Socket-Weld. End	76.36.38	*	*	*	*									
Elbow 90 Deg.	Socket-Weld. End	76.36.39	*	*	*	*									
Equal Tee	Socket-Weld. End	76.36.80	*	*	*	*									
Coupling	Socket-Weld. End	76.36.28	*	*	*	*									
Cap	Socket-Weld. End	76.36.18	*	*	*	*									

* VALVES														
Check Valve Butt-Weld. End	75.59.10	*	*	*	*	*	*	*	*	*	*	*		
Gate Valve Butt-Weld. End	75.59.30	*	*	*	*	*	*	*	*	*	*	*	*	*
Globe Valve Butt-Weld. End	75.59.40	*	*	*	*	*	*	*	*					
* MISCELLANEOUS														
Gasket, Spiral Wound	85.41.31	*	*	*	*	*	*	*	*	*	*	*	*	*
Orifice Flange Set	60.88.52				*	*	*	*	*	*	*	*	*	*

Class No.: GP02	Page: 4	Content: Reducing Piping Components

Run	Br.	BROB	RECB 76.32.70	REEB 76.32.71	TERB 76.32.85	TERS 76.36.85
20×15			*	*	*	*
25×15			*	*	*	*
25×20			*	*	*	*
40×20			*			*
40×25			*	*		*
50×25			*	*		
50×40			*			
80×40				*	*	
80×50		*	*	*		
100×50		*	*	*		
100×80		*	*	*		
150×50		*				
150×80		*	*	*		
150×100		*	*	*		
200×50			*			
200×80		*				
200×100		*	*	*		
200×150		*	*	*		
250×50		*				
250×80		*				
250×100		*				

Run		Br.	BROB	RECB 76.32.70	REEB 76.32.71
400	×	50	*		
400	×	80	*		
400	×	150	*		
400	×	200	*	*	*
400	×	250	*	*	*
400	×	300	*	*	*
400	×	350	*	*	*

COMP. NAME	DESCRIPTION
BROS	Branch Fitting Socket-Weld. Outlet
BROB	Branch Outlet Red. Butt-Weld
RECB	Reducer Conc. Butt-Weld. End
REEB	Reducer Ecc. Butt-Weld. End
TERB	Tee Reducing Butt-Weld. End
TERS	Tee Reducing Socket-Weld. End

Run	Br.	BROS 76.80.26
40-150	15 *200-400	*
50-80	20	*
100-400		*
50	25	*
80-100		*
150-400		*
80-100	40	*
150-300		*

250×150	*	*	*
250×200	*	*	*
300×50	*		
300×80	*		
300×150	*	*	*
300×200	*	*	*
300×250	*	*	*
350×50	*		
350×80	*		
350×150	*		
350×200	*	*	*
350×250	*	*	*
350×300	*	*	*

350-400	*

Class No.: GP02	Page: 5	Content: Bolting and Assemblies

BOLT SET FLANGED JOINTS

DN	No.	Inch	mm	81.38.96
15	4	¾ ×	110	*
20	4	¾ ×	110	*
25	4	7/8 ×	125	*
40	4	1 ×	140	*
50	8	7/8 ×	145	*
80	8	7/8 ×	145	*
100	8	11/8 ×	170	*
150	12	11/8 ×	190	*
200	12	13/8 ×	220	*
250	16	13/8 ×	235	*
300	20	13/8 ×	250	*
350	20	11/2 ×	275	*
400	20	15/8 ×	285	*

BOLT SET SPECTACLE/SPACER

DN	No.	Inch	mm	81.38.96
15	4	¾ ×	115	*
20	4	¾ ×	125	*
25	4	7/8 ×	140	*
40	4	1 ×	160	*
50	8	7/8 ×	160	*
80	8	7/8 ×	165	*
100	8	11/8 ×	195	*
150	12	11/8 ×	230	*
200	12	13/8 ×	265	*
250	16	13/8 ×	285	*
300	20	13/8 ×	310	*
350	20	11/2 ×	345	*
400	20	15/8 ×	3 55	*

BOLT SET ORIFICE FLANGES

DN	No.	Inch	mm	81.38.96
15	4	7/8 ×	150	*
20	4	7/8 ×	150	*
25	4	7/8 ×	150	*
40	4	1 ×	160	*
50	8	7/8 ×	160	*
80	8	7/8 ×	160	*
100	8	11/8 ×	180	*
150	12	11/8 ×	210	*
200	12	13/8 ×	240	*
250	16	13/8 ×	250	*
300	20	13/8 ×	275	*
350	20	11/2 ×	300	*
400	20	15/8 ×	305	*

DRAIN POINT Fig. 0N

Run DN 15-25 Br DN 15

	No.
Branch: Table Page 1	1
Blind Flange	1
Gasket Spiral Wound	1
Gate Valve Butt-Weld. End	1
Pipe Nipple 50 mm	1
Stud Bolt with Nuts	4
Welding Neck Flange	1

DRAIN POINT Fig. 0N

Run DN 40-40 Br DN 20

	No.
Branch: Table Page 1	1
Blind Flange	1
Gasket Spiral Wound	1
Gate Valve Butt-Weld. End	1
Pipe Nipple 50 mm	1
Stud Bolt with Nuts	4
Welding Neck Flange	1

DRAIN POINT Fig. 0N

Run DN 50-400 Br DN 20

	No.
Branch: Table Page 1	1
Blind Flange	1
Gasket Spiral Wound	1
Gate Valve Butt-Weld. End	1
Pipe Nipple 50 mm	1
Stud Bolt with Nuts	4
Welding Neck Flange	1

* VENT POINT Fig. 1N

Run DN 15-25 Br DN 15

	No.
Branch: Table Page 1	1
Blind Flange	1
Gasket Spiral Wound	1
Globe Valve Butt-Weld. End	1
Pipe Nipple 50 mm	1
Stud Bolt with Nuts	4
Welding Neck Flange	1

* VENT POINT Fig. 1N

Run DN 40-40 Br DN 20

	No.
Branch: Table Page 1	1
Blind Flange	1
Gasket Spiral Wound	1
Globe Valve Butt-Weld. End	1
Pipe Nipple 50 mm	1
Stud Bolt with Nuts	4
Welding Neck Flange	1

* VENT POINT Fig. 1N

Run DN 50-400 Br DN 20

	No.
Branch: Table Page 1	1
Blind Flange	1
Gasket Spiral Wound	1
Globe Valve Butt-Weld. End	1
Pipe Nipple 50 mm	1
Stud Bolt with Nuts	4
Welding Neck Flange	1

Class No.: GP06	Page: 1	Content: General
Base Material: Alloy Steel (1.25 Cr. - 0.5 Mo)	First Issue: Revision:	
Rating: PN 150 (Class 900)	Date:	
Corrosion Allowance: 1 mm	Sign:	

Temperature °C		0	50	100	150	200	250	300	350	400
Pressure Barg.	DN 15-150	137.6	137.6	126.7	115.6	106.9	100.2	94.9	91.1	87.4

DN	Schedule
15	40s
20	40s
25	40s
40	40s
50	80s
80	80s
100	80s
150	80s

BRANCH CONNECTIONS 90 DEGREES

Run Size \ BRANCH SIZE	15	20	25	40	50	80	100	150
150	C	C	C	C	E	E	E	A
100	C	C	C	C	E	E	A	
80	C	C	C	C	E	A		
50	C	C	C	C	A			
40	C	B	C	A				
25	B	B	A					
20	B	A						
15	A							

Notes:

- Design limits are acc. flange rating ANSI B16.5 Material Group 2.2 and to allowable internal pressure acc. ANSI B31.3.
- Piston type check valves for horizontal monting only.
- Application of other types of branch connections is subject to company approval

CODE	EXPLANATIONOFCHARACTERS
A	Equal tee
B	**Reducing tee**
C	**Branch fitting outlet socket-weld**
E	**Branch outlet reducing butt-weld**

Class No.: GS02	Page: 2	Content: Material Descriptions

* PIPE

PIPE	Pipe	DN	15-150	ASTM	A312-TP316L (Seamless/wld.)
PNPP	Pipe Nipple 50 mm	DN	15-40	ASTM	A312-TP316L (Seamless)

* FLANGES

BLFL	Blind Flange	DN	15-150	ASTM	A182-F316
SBFL	Spectacle Blind Flange	DN	15-150	ASTM	A240-TP316
SPRT	Spacer Ring Type (ANS Flanges)	DN	15-150	ASTM	A240-TP316
WNFL	Welding Neck Flange	DN	15-150	ASTM	A182-F316

* FITTINGS

CAPB	Cap	Butt-Weld. End	DN	15-150	ASTM	A403-WP316L
E45B	Elbow 45 Deg.	Butt-Weld. End	DN	15-150	ASTM	A403-WP316L
E90B	Elbow 90 Deg.	Butt-Weld. End	DN	15-150	ASTM	A403-WP316L
TEEB	Equal Tee	Butt-Weld. End	DN	15-150	ASTM	A403-WP316L
E45S	Elbow 45 Deg.	Socket-Weld. End	DN	15-40	ASTM	A182-F11
E90S	Elbow 90 Deg.	Socket-Weld. End	DN	15-40	ASTM	A182-F11
TEES	Equal Tee	Socket-Weld. End	DN	15-40	ASTM	A182-F11
COUS	Coupling	Socket-Weld. End	DN	15-40	ASTM	A182-F11
CAPS	Cap	Socket-Weld. End	DN	15-40	ASTM	A182-F11

* REDUCING FITTINGS

BROS	Branch Fitting Socket-Weld. Outlet	DN	15-50	ASTM	A182-F316
BROB	Branch Outlet Red. Butt-Weld.	DN	15-150	ASTM	A182-F316
RECB	Reducer Conc. Butt-Weld. End	DN	20-150	ASTM	A403-WP316L
REEB	Reducer Ecc. Butt-Weld. End	DN	20-150	ASTM	A403-WP316L
TERB	Tee Reducing Butt-Weld. End	DN	20-150	ASTM	A403-WP316L
TERS	Tee Reducing Socket-Weld. End	DN	20-40	ASTM	A182-F316

Note:
For full material description see relevant MESC buying description.

* VALVES

CHVF	Check Valve Flanged	DN	15-150	Body:	ASTM	A351-CF8M, A182-F316
				Trim:	AISI	316, 316L
GAVF	Gate Valve Flanged	DN	15-150	Body:	ASTM	A351-CF8M, A182-F316
				Trim:	AISI	316, 316L
GLVF	Globe Valve Flanged	DN	15-150	Body:	ASTM	A351-CF8M, A182-F316
				Trim:	AISI	316, 316L

* MISCELLANEOUS

GKSW	Gasket, Spiral Wound	DN	15-150	AISI 316, Graphited Filled, CS Centring-, SS Inner-Ring		
ORFS	Orifice Flange Set	DN	50-150	ASTM	A182-F316	
STBT	Stud Bolt with Nuts		---	Studs:	ASTM	A193-B7
				Nuts:	ASTM	A194-2H

Class No.: GS02	Page: 3	Content: Piping Components

ITEM DESCRIPTION			NOMINAL PIPE SIZE 15	20	25	40	50	80	100	150
* PIPE										
Pipe		74.36.40	*	*	*	*	*	*	*	*
* FLANGES										
Blind Flange		76.65.11	*	*	*	*	*	*	*	*
Spectacle Blind Flange		76.88.07	*	*	*	*	*	*	*	*
Spacer Ring Type (ANS Flanges)			*	*	*	*	*	*	*	*
Welding Neck Flange		76.65.80	*	*	*	*	*	*	*	*
* FITTINGS										
Cap	Butt-Weld. End	76.32.18	*	*	*	*	*	*	*	*
Elbow 45 Deg.	Butt-Weld. End	76.33.38	*	*	*	*	*	*	*	*
Elbow 90 Deg.	Butt-Weld. End	76.33.40	*	*	*	*	*	*	*	*
Equal Tee	Butt-Weld. End	76.33.84	*	*	*	*	*	*	*	*
Elbow 45 Deg.	Socket-Weld. End	76.37.38	*	*	*	*				
Elbow 90 Deg.	Socket-Weld. End	76.37.39	*	*	*	*				
Equal Tee	Socket-Weld. End	76.37.80	*	*	*	*				
Coupling	Socket-Weld. End	76.37.28	*	*	*	*				
Cap	Socket-Weld. End	76.37.18	*	*	*	*				
* VALVES										
Check Valve Flanged		75.40.11	*	*	*	*	*	*	*	*
Gate Valve Flanged		75.40.31	*	*	*	*	*	*	*	*
Globe Valve Flanged		75.40.41	*	*	*	*	*	*	*	*
* MISCELLANEOUS										
Gasket, Spiral Wound		85.41.37	*	*	*	*	*	*	*	*
Orifice Flange Set		60.88.52					*	*	*	*

Class No.: GS02	Page: 4	Content: Reducing Piping Components

Run	Br.	BROB 76.80.00	RECB 76.33.70	REEB 76.33.73	TERB 76.33.85	TERS 76.37.85
20×15			*	*	*	*
25×15			*	*	*	*
25×20			*	*	*	*
40×15					*	*
40×20			*	*	*	*
40×25			*	*	*	*
80×50		*	*	*	*	
100×50		*	*	*	*	
100×80		*	*	*	*	
150×50		*				
150×80		*	*	*	*	
150×100		*	*	*	*	

COMP. NAME	DESCRIPTION
BROS	Branch Fitting Socket-Weld. Outlet
BROB	Branch Outlet Red. Butt-Weld
RECB	Reducer Conc. Butt-Weld. End
REEB	Reducer Ecc. Butt-Weld. End
TERB	Tee Reducing Butt-Weld. End
TERS	Tee Reducing Socket-Weld. End

Run	Br.	BROS 76.80.26
40-150	15	*
50-80	20	*
100-150		*
50	25	*
80-100		*
150		*
80-100	40	*
150		*

Class No.: GS02	Page: 5	Content: Bolting and Assemblies

BOLT SET FLANGED JOINTS

DN	No.	Inch	mm	81.38.61
15	4	¾	× 110	*
20	4	¾	× 110	*
25	4	7/8	× 125	*
40	4	1	× 140	*
50	8	7/8	× 145	*
80	8	7/8	× 145	*
100	8	11/8	× 170	*
150	12	11/8	× 190	*

BOLT SET SPECTACLE/SPACER

DN	No.	Inch	mm	81.38.61
15	4	¾	× 115	*
20	4	¾	× 125	*
25	4	7/8	× 140	*
40	4	1	× 160	*
50	8	7/8	× 160	*
80	8	7/8	× 165	*
100	8	11/8	× 195	*
150	12	11/8	× 230	*

BOLT SET ORIFICE FLANGES

DN	No.	Inch	mm	81.38.96
15	4	7/	× 150	*
20	4	7/8	× 150	*
25	4	7/8	× 150	*
40	4	1	× 160	*
50	8	7/8	× 160	*
80	8	7/8	× 160	*
100	8	11/8	× 180	*
150	12	11/8	×210	*

DRAIN POINT Fig. 0I

Run DN 15-25 Br DN 15

	No.
Branch: Table Page 1	1
Blind Flange	1
Gasket Spiral Wound	2
Gate Valve Flanged	1
Stud Bolt with Nuts	8
Welding Neck Flange	1

DRAIN POINT Fig. 0I

	No.
Branch: Table Page 1	1
Blind Flange	1
Gasket Spiral Wound	2
Gate Valve Flanged	1
Stud Bolt with Nuts	8
Welding Neck Flange	1

DRAIN POINT Fig. 0J

Run DN 50-150 Br DN 20

	No.
Branch: Table Page 1	1
Blind Flange	1
Gasket Spiral Wound	2
Gate Valve Flanged	1
Pipe Nipple 50 mm	1
Stud Bolt with Nuts	8
Welding Neck Flange	1

VENT POINT Fig. 1I

Run DN 15-25 Br DN 15

	No.
Branch: Table Page 1	1
Blind Flange	1
Gasket Spiral Wound	2
Globe Valve Flanged	1
Stud Bolt with Nuts	8
Welding Neck Flange	1

* VENT POINT Fig. 1I

Run DN 40-40 Br DN 20

	No.
Branch: Table Page 1	1
Blind Flange	1
Gasket Spiral Wound	2
Globe Valve Flanged	1
Stud Bolt with Nuts	8
Welding Neck Flange	1

* VENT POINT Fig. 1J

Run DN 50-150 Br DN 20

	No.
Branch: Table Page 1	1
Blind Flange	1
Gasket Spiral Wound	2
Globe Valve Flanged	1
Pipe Nipple 50 mm	1
Stud Bolt with Nuts	8
Welding Neck Flange	1

Base Material: Alloy Steel (1.25 Cr. - 0.5 Mo)	First Issue:	Revision:	
Rating: PN 150 (Class 900)		Date:	
Corrosion Allowance: 1 mm		Sign:	

Temperature °C		0	50	100	150	200	250	300	350	400	450
Pressure Barg.	DN 15-150	146.4	142.0	124.5	112.5	103.2	96.1	91.5	87.9	85.8	84.6

DN	Schedule
15	40s
20	40s
25	40s
40	40s
50	40s
80	40s
100	80s
150	80s

BRANCH CONNECTIONS 90 DEGREES

Run Size	BRANCH SIZE 15	20	25	40	50	80	100	150
150	C	C	C	C	E	E	E	A
100	C	C	C	C	E	E	A	
80	C	C	C	C	E	A		
50	C	C	C	C	A			
40	C	B	C	A				
25	B	c	A					
20	B	A						
15	A							

Notes:

- Design limits are acc. flange rating ANSI B16.5 Material Group 2.4 and to allowable internal pressure according to ANSI B31.3 and to bolting materia
- Piston type check valve for horizontal mounting only
- Application of other types of branch connections is subject to company appr

CODE	EXPLANATION OFCHARACTERS
A	**Equal tee**
B	Reducing tee
C	Branch fitting outlet socket-weld
E	Branch outlet reducing butt-weld

* PIPE

PIPE	Pipe	DN	15-150	ASTM	A312-TP321/347 (Seamless or Welded)
PNPP	Pipe Nipple 50 mm	DN	15-40	ASTM	A312-TP321/347 (Seamless)

* FLANGES

BLFL	Blind Flange	DN	15-150	ASTM	A182-F321/347
SBFL	Spectacle Blind Flange	DN	15-150	ASTM	A240-TP321/347
SPRT	Spacer Ring Type (ANS Flanges)	DN	15-150	ASTM	A240-TP321/347
WNFL	Welding Neck Flange	DN	15-150	ASTM	A182-F321/347

* FITTINGS

CAPB	Cap	Butt-Weld. End	DN	15-150	ASTM	A403-WP321/347
E45B	Elbow 45 Deg.	Butt-Weld. End	DN	15-150	ASTM	A403-WP321/347
E90B	Elbow 90 Deg.	Butt-Weld. End	DN	15-150	ASTM	A403-WP321/347
TEEB	Equal Tee	Butt-Weld. End	DN	15-150	ASTM	A403-WP321/347
E45S	Elbow 45 Deg.	Socket-Weld. End	DN	15-40	ASTM	A182-F11
E90S	Elbow 90 Deg.	Socket-Weld. End	DN	15-40	ASTM	A182-F11
TEES	Equal Tee	Socket-Weld. End	DN	15-40	ASTM	A182-F11
COUS	Coupling	Socket-Weld. End	DN	15-40	ASTM	A182-F11
CAPS	Cap	Socket-Weld. End	DN	15-40	ASTM	A182-F11

* REDUCING FITTINGS

BROS	Branch Fitting Socket-Weld. Outlet	DN	15-50	ASTM	A182-F321/347
BROB	Branch Outlet Red. Butt-Weld.	DN	15-150	ASTM	A182-F321/347
RECB	Reducer Conc. Butt-Weld. End	DN	20-150	ASTM	A403-WP321/347
REEB	Reducer Ecc. Butt-Weld. End	DN	20-150	ASTM	A403-WP321/347
TERB	Tee Reducing Butt-Weld. End	DN	20-50	ASTM	A403-WP321/347
TERS	Tee Reducing Socket-Weld. End	DN	20-40	ASTM	A182-F321/347

Note:
For full material description see relevant MESC buying description.

* VALVES

CHVF	Check Valve Flanged	DN	15-150	Body:	ASTM	A351-CF8C, A182-F321
				Trim:	AISI	321
GAVF	Gate Valve Flanged	DN	15-150	Body:	ASTM	A351-CF8C, A182-F321
				Trim:	AISI	321
GLVF	Globe Valve Flanged	DN	15-150	Body:	A351-CF8C, A182-F321	
				Trim:	AISI	321

* MISCELLANEOUS

GKSW	Gasket, Spiral Wound	DN	15-150	AISI 304, Graphited Filled, CS Centring-, AISI 304 Inner-Ring		
ORFS	Orifice Flange Set	DN	50-150		ASTM	A182-F321/347
STBT	Stud Bolt with Nuts		---	Studs:	ASTM	A453-GR.660, CL.A.

ITEM DESCRIPTION			NOMINAL PIPE SIZE 15	20	25	40	50	80	100	150
* PIPE										
Pipe		74.36.40	*	*	*	*	*	*	*	*
* FLANGES										
Blind Flange		76.65.10	*	*	*	*	*	*	*	*
Spectacle Blind Flange		76.88.07	*	*	*	*	*	*	*	*
Spacer Ring Type (ANS Flanges)			*	*	*	*	*	*	*	*
Welding Neck Flange		76.65.80	*	*	*	*	*	*	*	*
* FITTINGS										
Cap	Butt-Weld. End	76.33.18	*	*	*	*	*	*	*	*
Elbow 45 Deg.	Butt-Weld. End	76.33.38	*	*	*	*	*	*	*	*
Elbow 90 Deg.	Butt-Weld. End	76.33.40/41	*	*	*	*	*	*	*	*
Equal Tee	Butt-Weld. End	76.33.84	*	*	*	*	*	*	*	*
Elbow 45 Deg.	Socket-Weld. End	76.36.38	*	*	*	*				
Elbow 90 Deg.	Socket-Weld. End	76.36.39	*	*	*	*				
Equal Tee	Socket-Weld. End	76.36.80	*	*	*	*				
Coupling	Socket-Weld. End	76.36.28	*	*	*	*				
Cap	Socket-Weld. End	76.36.18	*	*	*	*				
* VALVES										
Check Valve Flanged		75.40.11	*	*	*	*	*	*	*	*
Gate Valve Flanged		75.40.31	*	*	*	*	*	*	*	*
Globe Valve Flanged		75.40.41	*	*	*	*	*	*	*	*
* MISCELLANEOUS										
Gasket, Spiral Wound		85.41.31	*	*	*	*	*	*	*	*
Orifice Flange Set		60.88.52				*	*	*	*	*

Run Br.	BROB	RECB 76.33.70	REEB 76.33.73	TERB 76.33.85	TERS 76.37.85
20 × 15		*	*	*	*
25 × 15		*	*	*	*
25 × 20	*	*	*	*	*
40 × 15				*	*
40 × 20		*	*	*	*
40 × 25		*	*	*	*
50 × 25	*	*	*		
50 × 40		*	*	*	
80 × 40		*	*		
80 × 50	*	*	*		
100 × 50	*	*	*		
100 × 80	*	*	*		
150 × 50	*				
150 × 80	*	*	*		
150 × 100	*	*	*		

COMP. NAME	DESCRIPTION
BROS	Branch Fitting Socket-Weld. Outlet
BROB	Branch Outlet Red. Butt-Weld
RECB	Reducer Conc. Butt-Weld. End
REEB	Reducer Ecc. Butt-Weld. End
TERB	Tee Reducing Butt-Weld. End
TERS	Tee Reducing Socket-Weld. End

Run	Br.	BROS 76.80.26
40-150	15	*
50-80	20	*
100-150		*
50	25	*
80-100		*
150		*
80-100	40	*
150		*

Class No.: GS06	Page: 5	Content: Bolting and Assemblies

BOLT SET FLANGED JOINTS

DN	No.	Inch		mm	81.38.61
15	4	¾	×	110	*
20	4	¾	×	110	*
25	4	7/8	×	125	*
40	4	1	×	140	*
50	8	7/8	×	145	*
80	8	7/8	×	145	*
100	8	11/8	×	170	*
150	12	11/8	×	190	*

BOLT SET SPECTACLE/SPACER

DN	No.	Inch		mm	81.38.61
15	4	¾	×	115	*
20	4	¾	×	125	*
25	4	7/8	×	140	*
40	4	1	×	160	*
50	8	7/8	×	160	*
80	8	7/8	×	165	*
100	8	11/8	×	195	*
150	12	11/8	×	230	*

BOLT SET ORIFICE FLANGES

DN	No.	Inch		mm	81.38.96
15	4	7/	×	150	*
20	4	7/8	×	150	*
25	4	7/8	×	150	*
40	4	1	×	160	*
50	8	7/8	×	160	*
80	8	7/8	×	160	*
100	8	11/8	×	180	*
150	12	11/8	×	210	*

DRAIN POINT Fig. 0I

Run DN 15-25 Br DN 15

	No.
Branch: Table Page 1	1
Blind Flange	1
Gasket Spiral Wound	2
Gate Valve Flanged	1
Stud Bolt with Nuts	8
Welding Neck Flange	1

DRAIN POINT Fig. 0I

	No.
Branch: Table Page 1	1
Blind Flange	1
Gasket Spiral Wound	2
Gate Valve Flanged	1
Stud Bolt with Nuts	8
Welding Neck Flange	1

DRAIN POINT Fig. 0J

Run DN 50-150 Br DN 20

	No.
Branch: Table Page 1	1
Blind Flange	1
Gasket Spiral Wound	2
Gate Valve Flanged	1
Pipe Nipple 50 mm	1
Stud Bolt with Nuts	8
Welding Neck Flange	1

VENT POINT Fig. 1I

Run DN 15-25 Br DN 15

	No.
Branch: Table Page 1	1
Blind Flange	1
Gasket Spiral Wound	2
Globe Valve Flanged	1
Stud Bolt with Nuts	8
Welding Neck Flange	1

* VENT POINT Fig. 1I

Run DN 40-40 Br DN 20

	No.
Branch: Table Page 1	1
Blind Flange	1
Gasket Spiral Wound	2
Globe Valve Flanged	1
Stud Bolt with Nuts	8
Welding Neck Flange	1

* VENT POINT Fig. 1J

Run DN 50-150 Br DN 20

	No.
Branch: Table Page 1	1
Blind Flange	1
Gasket Spiral Wound	2
Globe Valve Flanged	1
Pipe Nipple 50 mm	1
Stud Bolt with Nuts	8
Welding Neck Flange	1

Class No.: GS07	Page: 1	Content: General
Base Material: Stainless Steel AISI 321, Stab. HT	First Issue: revision	
Rating: PN 150 (Class 900)	Date:	
Corrosion Allowance: 0 mm	Sign:	

Temperature °C	0	50	100	150	200	250	300	350	400	500	538
Pressure Barg.DN 15-300	146.4	142.0	124.5	112.5	103.2	96.1	91.5	87.9	85.8	81.3	73.7

TABLE OF SCHEDULES

DN	Schedule
15	40s
20	40s
25	40s
40	40s
50	40s
80	40s
100	80s
150	80s
200	100
250	100
300	100

BRANCH CONNECTIONS 90 DEGREES

Run Size	BRANCH SIZE 15	20	25	40	50	80	100	150	200	250	300
300	C	C	C	C	E	E	E	B	B	B	A
250	C	C	C	C	E	E	B	B	B	A	
200	C	C	C	C	E	E	B	B	A		
150	C	C	C	C	E	B	B	A			
100	C	C	C	C	C	B	B	A			
80	C	C	C	C	C	B	A				
50	C	C	C	C	C	A					
40	C	B	B	B	A						
25	B	B	A	A							
20	B	A									
15	A										

CODE	EXPLANATION OFCHARACTERS
A	Equal tee
B	Reducing tee
C	Branch fitting outlet socket-weld
E	Branch outlet reducing butt-weld

Notes:
- Design limits are acc. flange rating ANSI B16.5 Material Group 2.4 and to allowable internal pressure according to ANSI B31.3 and to bolting material.
- Piston type check valve for horizontal mounting only.
- Cold bending of pipe is not allowed and hot bending is not recommended.
- Application of other types of branch connections is subject to company approval.

Class No.: GS07	Page: 2	Content: Material Descriptions

PIPE

PIPE	Pipe	DN	15-300	ASTM	A312-TP321 Stab. HT (Seamless or Welded)
PNPP	Pipe Nipple 50 mm	DN	15-40	ASTM	A312-TP321 Stab. HT (Seamless)

* FLANGES

BLFL	Blind Flange	DN	15-300	ASTM	A182-F321 Stab. HT
SBFL	Spectacle Blind Flange	DN	15-300	ASTM	A240-TP321 Stab. HT
SPRT	Spacer Ring Type (ANS Flanges)	DN	15-300	ASTM	A240-TP321 Stab. HT
WNFL	Welding Neck Flange	DN	15-300	ASTM	A182-F321 Stab. HT

* FITTINGS

CAPB	Cap	Butt-Weld. End	DN	15-300	ASTM	A403-WP-S-321 Stab. HT
E45B	Elbow 45 Deg.	Butt-Weld. End	DN	15-300	ASTM	A403-WP-S-321 Stab. HT
E90B	Elbow 90 Deg.	Butt-Weld. End	DN	15-300	ASTM	A403-WP-S-321 Stab. HT
TEEB	Equal Tee	Butt-Weld. End	DN	15-300	ASTM	A403-WP-S-321 Stab. HT
E45S	Elbow 45 Deg.	Socket-Weld. End	DN	15-40	ASTM	A182-F11
E90S	Elbow 90 Deg.	Socket-Weld. End	DN	15-40	ASTM	A182-F11
TEES	Equal Tee	Socket-Weld. End	DN	15-40	ASTM	A182-F11
COUS	Coupling	Socket-Weld. End	DN	15-40	ASTM	A182-F11
CAPS	Cap	Socket-Weld. End	DN	15-40	ASTM	A182-F11

* REDUCING FITTINGS

BROS	Branch Fitting Socket-Weld. Outlet	DN	15-50	ASTM	A182-F321 Stab. HT
BROB	Branch Outlet Red. Butt-Weld.	DN	80-300	ASTM	A182-F321 Stab. HT
RECB	Reducer Conc. Butt-Weld. End	DN	20-300	ASTM	A403-WP-S-321 Stab. HT
REEB	Reducer Ecc. Butt-Weld. End	DN	20-300	ASTM	A403-WP-S-321 Stab. HT
TERB	Tee Reducing Butt-Weld. End	DN	20-300	ASTM	A403-WP-S-321 Stab. HT
TERS	Tee Reducing Socket-Weld. End	DN	20-40	ASTM	A182-F321 Stab. HT

Note:
For full material description see relevant MESC buying description.

* VALVES

CHVB	Check Valve Butt-Weld. End	DN	15-300	Body:	ASTM	A351-CF8C, A182-F321
				Trim:	AISI	321 + Stellite 6
GAVB	Gate Valve Butt-Weld. End	DN	15-300	Body:	ASTM	A351-CF8C, A182-F321
				Trim:	AISI	321 + Stellite 6
GLVB	Globe Valve Butt-Weld. End	DN	15-150	Body:	A351-CF8C, A182-F321	
				Trim:	AISI	321 + Stellite 6
GAVF	Gate Valve Flanged	DN	15-50	Body:	ASTM	A351-CF8C, A182-F321
				Trim:	AISI	321 + Stellite 6

* MISCELLANEOUS

GKSW	Gasket, Spiral Wound	DN	15-300	AISI 316, Graphited Filled, CS Centring-, SS Inner-Ring		
ORFS	Orifice Flange Set	DN	50-300		ASTM	A182-F321 Stab. HT
STBT	Stud Bolt with Nuts		---	Studs:	ASTM	A453-Gr. 660, CL.A.

Class No.: GS07	Page: 3	Content: Piping Components

ITEM DESCRIPTION			NOMINAL PIPE SIZE 15	20	25	40	50	80	100	150	200	250	300
PIPE													
Pipe		74.36.40	*	*	*	*	*	*	*	*	*	*	*
* FLANGES													
Blind Flange		76.65.10	*	*	*	*	*	*	*	*	*	*	*
Spectacle Blind Flange		76.88.07	*	*	*	*	*	*	*	*	*	*	*
Spacer Ring Type (ANS Flanges)			*	*	*	*	*	*	*	*	*	*	*
Welding Neck Flange		76.65.80	*	*	*	*	*	*	*	*	*	*	*
* FITTINGS													
Cap	Butt-Weld. End	76.33.18	*	*	*	*	*	*	*	*	*	*	*
Elbow 45 Deg.	Butt-Weld. End	76.33.38	*	*	*	*	*	*	*	*	*	*	*
Elbow 90 Deg.	Butt-Weld. End	76.33.44	*	*	*	*	*	*	*	*	*	*	*
Equal Tee	Butt-Weld. End	76.33.84	*	*	*	*	*	*	*	*	*	*	*
Elbow 45 Deg.	Socket-Weld. End	76.36.38	*	*	*	*							
Elbow 90 Deg.	Socket-Weld. End	76.36.39	*	*	*	*							
Equal Tee	Socket-Weld. End	76.36.80	*	*	*	*							
Coupling	Socket-Weld. End	76.36.28	*	*	*	*							
Cap	Socket-Weld. End	76.36.18	*	*	*	*							
* VALVES													
Check Valve Butt-Weld. End		75.58.11	*	*	*	*	*	*	*	*	*	*	*
Gate Valve Butt-Weld. End		75.58.31	*	*	*	*	*	*	*	*	*	*	*
Globe Valve Butt-Weld. End		75.58.41	*	*	*	*	*	*	*	*			
Gate Valve Flanged		75.40.41	*	*	*	*	*						
* MISCELLANEOUS													
Gasket, Spiral Wound		85.41.37	*	*	*	*	*	*	*	*	*	*	*
Orifice Flange Set		60.88.52					*	*	*	*	*	*	*

Class No.: GS07	Page: 4	Content: Reducing Piping Components

Run Br.	BROB	RECB 76.33.70	REEB 76.33.73	TERB 76.33.85	TERS 76.36.85
20 ×15		*	*	*	*
25 ×15		*	*	*	*
25 ×20		*	*	*	*
40 ×15				*	*
40 ×20		*	*	*	*
40 ×25		*	*	*	*
50 ×25		*	*		
50 ×40		*	*	*	
80 ×40		*	*		
80 ×50	*	*	*	*	
100 ×50	*	*	*	*	
100 ×80	*	*	*	*	
150 ×50	*				
150 ×80	*	*	*	*	
150 ×100	*	*	*	*	
200 ×50	*				
200 ×80	*				
200 ×100	*	*	*	*	
200 ×150	*	*	*	*	
250 ×50	*				
250 ×80	*				
250 ×100	*				
250 ×150	*	*	*	*	
250 ×200	*	*	*	*	
300 ×50	*				
300 ×80	*				
300 ×100	*				
300 ×150	*	*	*	*	
300 ×200	*	*	*	*	
300×250	*	*	*	*	

COMP. NAME	DESCRIPTION
BROS	Branch Fitting Socket-Weld. Outlet
BROB	Branch Outlet Red. Butt-Weld
RECB	Reducer Conc. Butt-Weld. End
REEB	Reducer Ecc. Butt-Weld. End
TERB	Tee Reducing Butt-Weld. End
TERS	Tee Reducing Socket-Weld. End

Run	Br.	BROS 76.80.26
40-150	15	*
50-80	20	*
100-300		*
50	25	*
80-100		*
150-300		*
80-100	40	*
150-300		*

Class No.: GS07	Page: 5	Content: Bolting and Assemblies

BOLT SET FLANGED JOINTS

DN	No.	Inch		mm	81.38.40
15	4	¾	×	110	*
20	4	¾	×	110	*
25	4	7/8	×	125	*
40	4	1	×	140	*
50	8	7/8	×	145	*
80	8	7/8	×	145	*
100	8	11/8	×	170	*
150	12	11/8	×	190	*
200	12	13/8	×	220	*
250	16	13/8	×	235	*
300	20	13/8	×	250	*

BOLT SET SPECTACLE/SPACER

DN	No.	Inch		mm	81.38.40
15	4	¾	×	115	*
20	4	¾	×	125	*
25	4	7/8	×	140	*
40	4	1	×	160	*
50	8	7/8	×	160	
80	8	7/8	×	165	*
100	8	11/8	×	195	*
150	12	11/8	×	230	*
200	12	13/8	×	265	*
250	16	13/8	×	285	*
300	20	13/8	×	310	*

BOLT SET ORIFICE FLANGES

DN	No.	Inch		mm	81.38.40	
15	4	7/8	×		150	*
20	4	7/8	×		150	*
25	4	7/8	×		150	*
40	4	1	×		160	*
50	8	7/8	×		160	*
80	8	7/8	×		160	*
100	8	11/8	×		180	*
150	12	11/8	×		210	*
200	12	13/8	×		240	*
250	16	13/8	×		250	*
300	20	13/8	×		275	*

DRAIN POINT Fig. 0N

Run DN 15-25 Br DN 15

	No.
Branch: Table Page 1	1
Blind Flange	1
Gasket Spiral Wound	1
Gate Valve Butt-Weld Ends	1
Pipe Nipple 50 mm	1
Stud Bolt with Nuts	4
Welding Neck Flange	1

* DRAIN POINT Fig. 0N

Run DN 40-40 Br DN 20

	No.
Branch: Table Page 1	1
Blind Flange	1
Gasket Spiral Wound	1
Gate Valve Butt-Weld Ends	1
Pipe Nipple 50 mm	1
Stud Bolt with Nuts	4
Welding Neck Flange	1

* DRAIN POINT Fig. 0N

Run DN 50-300 Br DN 20

	No.
Branch: Table Page 1	1
Blind Flange	1
Gasket Spiral Wound	1
Gate Valve Butt-Weld Ends	1
Pipe Nipple 50 mm	1
Stud Bolt with Nuts	4
Welding Neck Flange	1

VENT POINT Fig. 1N

Run DN 15-25 Br DN 15

	No.
Branch: Table Page 1	1
Blind Flange	1
Gasket Spiral Wound	1
Globe Valve Butt-Weld Ends	1
Pipe Nipple 50 mm	1
Stud Bolt with Nuts	4
Welding Neck Flange	1

* VENT POINT Fig. 1N

Run DN 40-40 Br DN 20

	No.
Branch: Table Page 1	1
Blind Flange	1
Gasket Spiral Wound	1
Globe Valve Butt-Weld Ends	1
Pipe Nipple 50 mm	1
Stud Bolt with Nuts	4
Welding Neck Flange	1

* VENT POINT Fig. 1N

Run DN 50-300 Br DN 20

	No.
Branch: Table Page 1	1
Blind Flange	1
Gasket Spiral Wound	1
Globe Valve Butt-Weld Ends	1
Pipe Nipple 50 mm	1
Stud Bolt with Nuts	4
Welding Neck Flange	1

Class No.: HN01	Page: 1	Content: General
Base Material: Carbon Steel	First Issue: Revision:	
	Date:	
	Sign:	

Temperature °C	0	50	100	150	200	250	300	350	400
Pressure Barg. DN 15-400	250.6	250.4	231.9	226.0	219.2	208.6	193.5	184.7	161.7

TABLE OF SCHEDULES

DN	Schedule
15	160
20	160
25	160
40	160
50	160
80	160
100	160
150	160
200	160
250	160
300	160
350	160
400	160

BRANCH CONNECTIONS 90 DEGREES

Run Size	BRANCH SIZE 15	20	25	40	50	80	100	150	200	250	300	350	400
400	C	C	C	C	E	E	E	E	E	E	E	E	A
350	C	C	C	C	E	E	E	E	E	E	E	A	
300	C	C	C	C	E	E	E	E	E	E	A		
250	C	C	C	C	E	E	E	E	E	A			
200	C	C	C	C	E	E	E	E	A				
150	C	C	C	C	E	E	E	A					
100	C	C	C	C	E	E	A						
80	C	C	C	C	E	A							
50	C	C	C	B	A								
40	C	B	B	A									
25	B	B	A										
20	B	A											
15	A												

CODE	EXPLANATION OFCHARACTERS
A	Equal tee
B	Reducing tee
C	Branch fitting outlet socket-weld
E	Branch outlet reducing butt-weld

Notes:
- Design limits are acc. flange rating ANSI B16.5 Material Group 1.1 and to allowable internal pressure acc. ANSI B31.3.
- Piston type check valves for horizontal mounting only.
- Application of other types of branch connections is subject to company approval.

Class No.: HN01	Page: 2	Content: Material Descriptions

* PIPE

PIPE	Pipe	DN	15-400	ASTM	A106-B
PNPP	Pipe Nipple 50 mm	DN	15-40	ASTM	A106-B

* FLANGES

BLFL	Blind Flange	DN	15-400	ASTM	A105
SBFL	Spectacle Blind Flange	DN	15-400	ASTM	A516-60
SPRT	Spacer Ring Type (ANS Flanges)	DN	15-400	ASTM	A516-60
WNFL	Welding Neck Flange	DN	15-400	ASTM	A105

* FITTINGS

CAPB	Cap	Butt-Weld. End	DN	15-400	ASTM	A234-WPB
E45B	Elbow 45 Deg.	Butt-Weld. End	DN	15-400	ASTM	A234-WPB
E90B	Elbow 90 Deg.	Butt-Weld. End	DN	15-400	ASTM	A234-WPB
TEEB	Equal Tee	Butt-Weld. End	DN	15-400	ASTM	A234-WPB
E45S	Elbow 45 Deg.	Socket-Weld. End	DN	15-40	ASTM	A105
E90S	Elbow 90 Deg.	Socket-Weld. End	DN	15-40	ASTM	A105
TEES	Equal Tee	Socket-Weld. End	DN	15-40	ASTM	A105
COUS	Coupling	Socket-Weld. End	DN	15-40	ASTM	A105
CAPS	Cap	Socket-Weld. End	DN	15-40	ASTM	A105

* REDUCING FITTINGS

BROS	Branch Fitting Socket-Weld. Outlet	DN	15-50	ASTM	A182-F11	
BROB	Branch Outlet Red. Butt-Weld.	DN	80-400	ASTM	A105	
RECB	Reducer Conc. Butt-Weld. End	DN	20-400	ASTM	A234-WPB	
REEB	Reducer Ecc. Butt-Weld. End	DN	20-400	ASTM	A234-WPB	
TERB	Tee Reducing Butt-Weld. End	DN	20-400	ASTM	A234-WPB	
TERS	Tee Reducing Socket-Weld. End	DN	20-40	ASTM	A105	

Note:
- For full material description see relevant MESC buying description.
- Where both socket weld and butt weld fittings are specified, preference is subject to company approval.

* VALVES

CHVF	Check Valve Flanged	DN	15-40	Body:	ASTM	A216-WCB/WCC, A105
				Trim:	AISI	316 (L) + Stellite 6
		DN	50-400	Body:	ASTM	A216-WCB/WCC, A105
				Trim:	AISI	410
GAVF	Gate Valve Flanged	DN	15-40	Body:	ASTM	A216-WCB/WCC, A105
				Trim:	AISI	316 (L) + Stellite 6
		DN	50-400	Body:	ASTM	A216-WCB/WCC, A105
				Trim:	AISI	410
GLVF	Globe Valve Flanged	DN	15-40	Body:	ASTM	A216-WCB/WCC, A105
				Trim:	AISI	316 (L) + Stellite 6
		DN	50-100	Body:	ASTM	A216-WCB/WCC, A105
				Trim:	AISI	410

* MISCELLANEOUS

GKSW	Gasket, Spiral Wound	DN	15-400	AISI	316, 316L, Graphite Filled	
				CS Centring-, SS Inner-Ring		
ORFS	Orifice Flange Set	DN	50-400	ASTM	A105	
STBT	Stud Bolt with Nuts		----	Studs:	ASTM	A193-B7
				Nuts:	ASTM	A194-2H

Class No.: HN01	Page: 3	Content: Piping Components

ITEM DESCRIPTION			NOMINAL PIPE SIZE 15	20	25	40	50	80	100	150	200	250	300	350	400
* PIPE															
Pipe		74.30.21/31	*	*	*	*	*	*	*	*	*	*	*	*	*
* FLANGES															
Blind Flange		76.62.10	*	*	*	*	*	*	*	*	*	*	*	*	*
Spectacle Blind Flange		76.88.06	*	*	*	*	*	*	*	*	*	*	*	*	*
Spacer Ring Type (ANS Flanges)		76.88.16	*	*	*	*	*	*	*	*	*	*	*	*	*
Welding Neck Flange		76.62.79	*	*	*	*	*	*	*	*	*	*	*	*	*
* FITTINGS															
Cap	Butt-Weld. End	76.30.18	*	*	*	*	*	*	*	*	*	*	*	*	*
Elbow 45 Deg.	Butt-Weld. End	76.30.38	*	*	*	*	*	*	*	*	*	*	*	*	*
Elbow 90 Deg.	Butt-Weld. End	76.30.39/40	*	*	*	*	*	*	*	*	*	*	*	*	*
Equal Tee	Butt-Weld. End	76.30.84	*	*	*	*	*	*	*	*	*	*	*	*	*
Elbow 45 Deg.	Socket-Weld. End	76.34.38	*	*	*	*									
Elbow 90 Deg.	Socket-Weld. End	76.34.39	*	*	*	*									
Equal Tee	Socket-Weld. End	76.34.84	*	*	*	*									
Coupling	Socket-Weld. End	76.34.28	*	*	*	*									
Cap	Socket-Weld. End	76.34.18	*	*	*	*									
* VALVES															
Check Valve Flanged		75.37.17	*	*	*	*									
				*	*	*	*	*	*	*	*	*			
Gate Valve Flanged		75.37.37	*	*	*	*									
				*	*	*	*	*	*	*	*	*			
Globe Valve Flanged		75.37.47	*	*	*	*									
				*	*	*									
* MISCELLANEOUS															
Gasket, Spiral Wound		85.41.37	*	*	*	*	*	*	*	*	*	*	*	*	*
Orifice Flange Set		60.88.52					*	*	*	*	*	*	*	*	*

Class No.:	HN01	Page:	4	Content:	Reducing Piping Components

Run	Br.	BROB 76.80.05	RECB 76.30.72	REEB 76.30.73	TERB 76.30.85	TERS 76.34.85
20 ×	15		*	*	*	*
25 ×	15		*	*	*	*
25 ×	20		*	*	*	*
40 ×	15		*	*		*
40 ×	20		*	*	*	*
40 ×	25		*	*	*	*
50 ×	20		*	*		
50 ×	25			*	*	
50 ×	40		*	*	*	
80 ×	40		*	*		
80 ×	50	*	*	*	*	
100 ×	40		*	*		
100 ×	50	*	*	*	*	
100 ×	80	*	*	*	*	
150 ×	50	*				
150 ×	80	*	*	*	*	
150 ×	100		*	*	*	*
200 ×	50	*				
200 ×	80	*				
200 ×	100		*	*	*	*
200 ×	150		*	*	*	*
250 ×	50	*				
250 ×	80	*				
250 ×	100		*	*	*	*
250 ×	150		*	*	*	*
250 ×	200		*	*	*	*
300 ×	50	*				
300 ×	80	*				
300 ×	100		*			
300 ×	150		*	*	*	*
300 ×	200		*	*	*	*
300 ×	250		*	*	*	*
350 ×	50	*				
350 ×	80	*				
350 ×	100		*			
350 ×	150		*	*	*	*
350 ×	200		*	*	*	*
350 ×	250		*	*	*	*
350 ×	300		*	*	*	*

Run	Br.	BROB 76.80.05	RECB 76.30.72	REEB 76.30.73	TERB 76.30.85
400 ×	50	*			
400 ×	80	*			
400 ×	100	*			
400 ×	150	*	*	*	*
400 ×	200	*	*	*	*
400 ×	250	*	*	*	*
400 ×	300	*	*	*	*
400 ×	350	*	*	*	*

COMP. NAME	DESCRIPTION
BROS	Branch Fitting Socket-Weld. Outlet
BROB	Branch Outlet Red. Butt-Weld
RECB	Reducer Conc. Butt-Weld. End
REEB	Reducer Ecc. Butt-Weld. End
TERB	Tee Reducing Butt-Weld. End
TERS	Tee Reducing Socket-Weld. End

RUN	Br.	BROS 76.80.26
40-150	15	*
200-400		*
50-80	20	*
100-400		*
50	25	*
80-100		*
150-400		*
80-100	40	*
150-300		*
350-400		*

Class No.: HN01	Page: 5	Content: Bolting and Assemblies

BOLT SET FLANGED JOINTS

DN	No.	Inch	mm	81.38.61
15	4	¾ ×	110	*
20	4	¾ ×	120	*
25	4	7/8 ×	130	*
40	4	1 ×	140	*
50	8	7/8 ×	150	*
80	8	11/8 ×	180	*
100	8	11/4 ×	195	*
150	12	13/8 ×	260	*
200	12	15/8 ×	350	*
250	12	17/8 ×	400	*
300	16	2 ×	440	*
350	16	21/ 4×	480	*
400	16	21/2 ×	530	*

BOLT SET SPECTACLE/SPACER

DN	No.	Inch	mm	81.38.61
15	4	¾ ×	120	*
20	4	¾ ×	130	*
25	4	7/8 ×	140	*
40	4	1 ×	160	*
50	8	7/8 ×	170	*
80	8	11/8 ×	210	*
100	8	11/4 ×	230	*
150	12	13/8 ×	300	*
200	12	15/8 ×	400	*
250	12	17/8 ×	460	*
300	16	2 ×	510	*
350	16	21/4 ×	560	*
400	16	21/2 ×	620	*

BOLT SET ORIFICE FLANGES

DN	No.	Inch	mm	81.38.61
15	4	7/8 ×	150	*
20	4	7/8 ×	150	*
25	4	7/8 ×	150	*
40	4	1 ×	160	*
50	8	7/8 ×	160	*
80	8	11/8 ×	190	*
100	8	11/4 ×	210	*
150	12	13/8 ×	275	*
200	12	15/8 ×	360	*
250	12	17/8 ×	415	*
300	16	2 ×	455	*
350	16	21/4 ×	500	*
400	16	21/2 ×	550	*

DRAIN POINT Fig. 0I

Run	DN 15-25	Br	DN 15
	DN 40	Br	DN 20

	No.
Branch: Table Page 1	1
Blind Flange	1
Gasket Spiral Wound	2
Gate Valve Flanged	1
Stud Bolt with Nuts	8
Welding Neck Flange	1

* DRAIN POINT Fig. 0J

Run	DN 50-400	Br	DN 20

	No.
Branch: Table Page 1	1
Blind Flange	1
Gasket Spiral Wound	2
Gate Valve Flanged	1
Pipe Nipple 50 mm	1
Stud Bolt with Nuts	8
Welding Neck Flange	1

* VENT POINT Fig. 1I

Run	DN 15-25	Br	DN 15
	DN 40	Br	DN 20

	No.
Branch: Table Page 1	1
Blind Flange	1
Gasket Spiral Wound	2
Globe Valve Flanged	1
Stud Bolt with Nuts	8
Welding Neck Flange	1

* VENT POINT Fig. 1J

Run	DN 50-400	Br	DN 20

	No.
Branch: Table Page 1	1
Blind Flange	1
Gasket Spiral Wound	2
Globe Valve Flanged	1
Pipe Nipple 50 mm	1
Stud Bolt with Nuts	8
Welding Neck Flange	1

Class No.: HN04	Page: 1	Content: General
Base Material: Carbon Steel	First Issue: Revision:	
Rating: PN 250 (Class 1500)	Date:	
Corrosion Allowance: 1 mm	Sign:	

Temperature °C	0	50	100	150	200	250	300	350	400
Pressure Barg. DN 15-400	250.6	250.4	231.9	226.0	219.2	208.6	193.5	184.7	161.7

TABLE OF SCHEDULES

DN	Schedule
15	160
20	160
25	160
40	160
50	160
80	160
100	160
150	160
200	160
250	160
300	160
350	160
400	160

BRANCH CONNECTIONS 90 DEGREES

Run Size	BRANCH SIZE 15	20	25	40	50	80	100	150	200	250	300	350	400
400	C	C	C	C	E	E	E	E	E	E	E	E	A
350	C	C	C	C	E	E	E	E	E	E	E	A	
300	C	C	C	C	E	E	E	E	E	E	A		
250	C	C	C	C	E	E	E	E	E	A			
200	C	C	C	C	E	E	E	E	A				
150	C	C	C	C	E	E	E	A					
100	C	C	C	C	E	E	A						
80	C	C	C	C	E	A							
50	C	C	C	B	A								
40	C	B	B	A									
25	B	B	A										
20	B	A											
15	A												

CODE	EXPLANATION OFCHARACTERS
A	Equal tee
B	Reducing tee
C	Branch fitting outlet socket-weld
E	Branch outlet reducing butt-weld

Notes:
- Design limits are acc. flange rating ANSI B16.5 Material Group 1.1 and to allowable internal pressure acc. ANSI B31.3.
- Piston type check valves for horizontal mounting only.
- Application of other types of branch connections is subject to company approval.

Class No.: HN04	Page: 2	Content: Material Descriptions

* PIPE

PIPE	Pipe	DN	15-400	ASTM	A106-B
PNPP	Pipe Nipple 50 mm	DN	15-40	ASTM	A106-B

* FLANGES

BLFL	Blind Flange	DN	15-400	ASTM	A105
SBFL	Spectacle Blind Flange	DN	15-400	ASTM	A516-60
SPRT	Spacer Ring Type (ANS Flanges)	DN	15-400	ASTM	A516-60
WNFL	Welding Neck Flange	DN	15-400	ASTM	A105

* FITTINGS

CAPB	Cap	Butt-Weld. End	DN	15-400	ASTM	A234-WPB
E45B	Elbow 45 Deg.	Butt-Weld. End	DN	15-400	ASTM	A234-WPB
E90B	Elbow 90 Deg.	Butt-Weld. End	DN	15-400	ASTM	A234-WPB
TEEB	Equal Tee	Butt-Weld. End	DN	15-400	ASTM	A234-WPB
E45S	Elbow 45 Deg.	Socket-Weld. End	DN	15-40	ASTM	A105
E90S	Elbow 90 Deg.	Socket-Weld. End	DN	15-40	ASTM	A105
TEES	Equal Tee	Socket-Weld. End	DN	15-40	ASTM	A105
COUS	Coupling	Socket-Weld. End	DN	15-40	ASTM	A105
CAPS	Cap	Socket-Weld. End	DN	15-40	ASTM	A105

* REDUCING FITTINGS

BROS	Branch Outlet Socket-Weld. End	DN	15-50	ASTM	A105
BROB	Branch Outlet Red. Butt-Weld.	DN	80-400	ASTM	A105
RECB	Reducer Conc. Butt-Weld. End	DN	20-400	ASTM	A234-WPB
REEB	Reducer Ecc. Butt-Weld. End	DN	20-400	ASTM	A234-WPB
TERB	Tee Reducing Butt-Weld. End	DN	20-400	ASTM	A234-WPB
TERS	Tee Reducing Socket-Weld. End	DN	20-40	ASTM	A105

Note:
- For full material description see relevant MESC buying description.
- Where both socket weld and butt weld fittings are specified, preference is subject to company approval.

* VALVES

CHVF	Check Valve Flanged	DN	15-400	Body:	ASTM	A216-WCB/WCC, A105
				Trim:	AISI	316 (L) + Stellite 6
GAVF	Gate Valve Flanged	DN	15-400	Body:	ASTM	A216-WCB/WCC, A105
				Trim:	AISI	316 (L) + Stellite 6
GLVF	Globe Valve Flanged	DN	15-100	Body:	ASTM	A216-WCB/WCC, A105
				Trim:	AISI	316 (L) + Stellite 6

* MISCELLANEOUS

GKSW	Gasket, Spiral Wound	DN	15-400	AISI	316, 316 L, Graphite Filled CS Centring-, SS Inner-Ring	
ORFS	Orifice Flange Set	DN	50-400		ASTM	A105
STBT	Stud Bolt with Nuts		---	Studs:	ASTM	A193-B7
				Nuts:	ASTM	A194-2H

Class No.: HN04	Page: 3	Content: Piping Components

ITEM DESCRIPTION			NOMINAL PIPE SIZE 15	20	25	40	50	80	100	150	200	250	300	350	400
* PIPE															
Pipe		74.30.21/31	*	*	*	*	*	*	*	*	*	*	*	*	*
* FLANGES															
Blind Flange		76.62.10	*	*	*	*	*	*	*	*	*	*	*	*	*
Spectacle Blind Flange		76.88.06	*	*	*	*	*	*	*	*	*	*	*	*	*
Spacer Ring Type (ANS Flanges)		76.88.16	*	*	*	*	*	*	*	*	*	*	*	*	*
Welding Neck Flange		76.62.79	*	*	*	*	*	*	*	*	*	*	*	*	*
* FITTINGS															
Cap	Butt-Weld. End	76.30.18	*	*	*	*	*	*	*	*	*	*	*	*	*
Elbow 45 Deg.	Butt-Weld. End	76.30.38	*	*	*	*	*	*	*	*	*	*	*	*	*
Elbow 90 Deg.	Butt-Weld. End	76.30.39/40	*	*	*	*	*	*	*	*	*	*	*	*	*
Equal Tee	Butt-Weld. End	76.30.84	*	*	*	*	*	*	*	*	*	*	*	*	*
Elbow 45 Deg.	Socket-Weld. End	76.34.38	*	*	*	*									
Elbow 90 Deg.	Socket-Weld. End	76.34.39	*	*	*	*									
Equal Tee	Socket-Weld. End	76.34.84	*	*	*	*									
Coupling	Socket-Weld. End	76.34.28	*	*	*	*									
Cap	Socket-Weld. End	76.34.18	*	*	*	*									
* VALVES															
Check Valve Flanged		75.37.17	*	*	*	*	*	*	*	*	*	*	*	*	*
Gate Valve Flanged		75.37.37	*	*	*	*	*	*	*	*	*	*	*	*	*
Globe Valve Flanged		75.37.47	*	*	*	*	*	*	*						
* MISCELLANEOUS															
Gasket, Spiral Wound		85.41.37	*	*	*	*	*	*	*	*	*	*	*	*	*
Orifice Flange Set		60.88.52					*	*	*	*	*	*	*	*	*

Class No.:	HN14	Page:	4	Content:	Reducing Piping Components

Run		Br.	BROB 76.80.05	RECB 76.30.72	REEB 76.30.73	TERB 76.30.85	TERS 76.34.85
20	×	15		*	*	*	*
25	×	15		*	*	*	*
25	×	20		*	*	*	*
40	×	15		*	*		*
40	×	20		*	*	*	*
40	×	25		*	*	*	*
50	×	20		*	*		
50	×	25		*	*		
50	×	40		*	*	*	
80	×	40		*	*		
80	×	50	*	*	*	*	
100	×	40		*	*		
100	×	50	*	*	*	*	
100	×	80	*	*	*	*	
150	×	50	*				
150	×	80	*	*	*	*	
150	×	100	*	*	*	*	
200	×	50	*				
200	×	80	*				
200	×	100	*	*	*	*	
200	×	150	*	*	*	*	
250	×	50	*				
250	×	80	*				
250	×	100	*	*	*	*	
250	×	150	*	*	*	*	
250	×	200	*	*	*	*	
300	×	50	*				
300	×	80	*				
300	×	100	*				
300	×	150	*	*	*	*	
300	×	200	*	*	*	*	
300	×	250	*	*	*	*	
350	×	50	*				
350	×	80	*				
350	×	100	*				
350	×	150	*	*	*	*	
350	×	200	*	*	*	*	
350	×	250	*	*	*	*	
350	×	300	*	*	*	*	

Run		Br.	BROB 76.80.05	RECB 76.30.72	REEB 76.30.73	TERB 76.30.85
400	×	50	*			
400	×	80	*			
400	×	100	*			
400	×	150	*	*	*	*
400	×	200	*	*	*	*
400	×	250	*	*	*	*
400	×	300	*	*	*	*
400	×	350	*	*	*	*

COMP. NAME	DESCRIPTION
BROS	Branch Fitting Socket-Weld. Outlet
BROB	Branch Outlet Red. Butt-Weld
RECB	Reducer Conc. Butt-Weld. End
REEB	Reducer Ecc. Butt-Weld. End
TERB	Tee Reducing Butt-Weld. End
TERS	Tee Reducing Socket-Weld. End

RUN	Br.	BROS 76.80.26
40-150	15	*
200-400		*
50-80	20	*
100-400		*
50	25	*
80-100		*
150-400		*
80-100	40	*
150-300		*
350-400		*

Class No.: HN04	Page: 5	Content: Bolting and Assemblies

BOLT SET FLANGED JOINTS

DN	No.	Inch		mm	81.38.61
15	4	¾	×	110	*
20	4	¾	×	120	*
25	4	7/8	×	130	*
40	4	1	×	140	*
50	8	7/8	×	150	*
80	8	11/8	×	180	*
100	8	11/4	×	195	*
150	12	13/8	×	260	*
200	12	15/8	×	350	*
250	12	17/8	×	400	*
300	16	2	×	440	*
350	16	21/4	×	480	*
400	16	21/2	×	530	*

BOLT SET SPECTACLE/SPACER

DN	No.	Inch		mm	81.38.61
15	4	¾	×	120	*
20	4	¾	×	130	*
25	4	7/8	×	140	*
40	4	1	×	160	*
50	8	7/8	×	170	*
80	8	11/8	×	210	*
100	8	11/4	×	230	*
150	12	13/8	×	300	*
200	12	15/8	×	400	*
250	12	17/8	×	460	*
300	16	2	×	510	*
350	16	21/4	×	560	*
400	16	21/2	×	620	*

BOLT SET ORIFICE FLANGES

DN	No.	Inch		mm	81.38.61
15	4	7/8	×	150	*
20	4	7/8	×	150	*
25	4	7/8	×	150	*
40	4	1	×	160	*
50	8	7/8	×	160	*
80	8	11/8	×	190	*
100	8	11/4	×	210	*
150	12	13/8	×	275	*
200	12	15/8	×	360	*
250	12	17/8	×	415	*
300	16	2	×	455	*
350	16	21/4	×	500	*
400	16	21/2	×	550	*

DRAIN POINT Fig. 0I

Run	DN 15-25	Br	DN 15	
	DN 40	Br	DN 20	
				No.
Branch: Table Page 1				1
Blind Flange				1
Gasket Spiral Wound				2
Gate Valve Flanged				1
Stud Bolt with Nuts				8
Welding Neck Flange				1

* DRAIN POINT Fig. 0J

Run	DN 50-400	Br	DN 20	
				No.
Branch: Table Page 1				1
Blind Flange				1
Gasket Spiral Wound				2
Gate Valve Flanged				1
Pipe Nipple 50 mm				1
Stud Bolt with Nuts				8
Welding Neck Flange				1

* VENT POINT Fig. 1I

Run	DN 15-25	Br	DN 15	
	DN 40	Br	DN 20	
				No.
Branch: Table Page 1				1
Blind Flange				1
Gasket Spiral Wound				2
Globe Valve Flanged				1
Stud Bolt with Nuts				8
Welding Neck Flange				1

* VENT POINT Fig. 1J

Run	DN 50-400	Br	DN 20	
				No.
Branch: Table Page 1				1
Blind Flange				1
Gasket Spiral Wound				2
Globe Valve Flanged				1
Pipe Nipple 50 mm				1
Stud Bolt with Nuts				8
Welding Neck Flange			1	

Class No.: HN10	Page: 1	Content: General

Base Material: Carbon Steel	First Issue:	Revision:	
Rating: PN 250 (Class 1500)		Date:	
Corrosion Allowance: 1 mm		Sign:	

Temperature °C		0	50	100	150	200	250	300	350	400
Pressure Barg.	DN 15-400	250.6	250.4	231.9	226.0	219.1	208.6	193.5	184.7	161.7

TABLE OF SCHEDULES

DN	Schedule
15	160
20	160
25	160
40	160
50	160
80	160
100	160
150	160
200	160
250	160
300	160
350	160
400	160

BRANCH CONNECTIONS 90 DEGREES

Run Size	BRANCH SIZE 15	20	25	40	50	80	100	150	200	250	300	350	400
400	C	C	C	C	E	E	E	E	E	E	E	E	A
350	C	C	C	C	E	E	E	E	E	E	E	A	
300	C	C	C	C	E	E	E	E	E	E	A		
250	C	C	C	C	E	E	E	E	E	A			
200	C	C	C	C	E	E	E	E	A				
150	C	C	C	C	E	E	E	A					
100	C	C	C	C	E	E	A						
80	C	C	C	C	E	A							
50	C	C	C	B	A								
40	C	B	B	A									
25	B	B	A										
20	B	A											
15	A												

CODE	EXPLANATION OFCHARACTERS
A	Equal tee
B	Reducing tee
C	Branch fitting outlet socket-weld
E	Branch outlet reducing butt-weld

Notes:
- Design limits are acc. flange rating ANSI B16.5 Material Group 1.1 and to allowable internal pressure acc. ANSI B31.3.
- Piston type check valves for horizontal mounting only.
- Application of other types of branch connections is subject to company approval.

* PIPE

PIPE	Pipe	DN	15-400	ASTM	A106-B
PNPP	Pipe Nipple 50 mm	DN	15-40	ASTM	A106-B

* FLANGES

BLFL	Blind Flange	DN	15-400	ASTM	A105
SBFL	Spectacle Blind Flange	DN	15-400	ASTM	A516-60
SPRT	Spacer Ring Type (ANS Flanges)	DN	15-400	ASTM	A516-60
WNFL	Welding Neck Flange	DN	15-400	ASTM	A105

* FITTINGS

CAPB	Cap	Butt-Weld. End	DN	15-400	ASTM	A234-WPB
E45B	Elbow 45 Deg.	Butt-Weld. End	DN	15-400	ASTM	A234-WPB
E90B	Elbow 90 Deg.	Butt-Weld. End	DN	15-400	ASTM	A234-WPB
TEEB	Equal Tee	Butt-Weld. End	DN	15-400	ASTM	A234-WPB
E45S	Elbow 45 Deg.	Socket-Weld. End	DN	15-40	ASTM	A105
E90S	Elbow 90 Deg.	Socket-Weld. End	DN	15-40	ASTM	A105
TEES	Equal Tee	Socket-Weld. End	DN	15-40	ASTM	A105
COUS	Coupling	Socket-Weld. End	DN	15-40	ASTM	A105
CAPS	Cap	Socket-Weld. End	DN	15-40	ASTM	A234-WPB

* REDUCING FITTINGS

BROS	Branch Outlet Socket-Weld. End	DN	15-50	ASTM	A105
BROB	Branch Outlet Red. Butt-Weld .	DN	80-400	ASTM	A105
RECB	Reducer Conc. Butt-Weld. End	DN	20-400	ASTM	A234-WPB
REEB	Reducer Ecc. Butt-Weld. End	DN	20-400	ASTM	A234-WPB
TERB	Tee Reducing Butt-Weld. End	DN	20-400	ASTM	A234-WPB
TERS	Tee Reducing Socket-Weld. End	DN	20-40	ASTM	A105

Note:
- For full material description see relevant MESC buying description.
- Where both socket weld and butt weld fittings are specified, preference is subject to company approval.

* VALVES

CHVB	Check Valve Butt-Weld. End	DN	15-400	Body:ASTMA216-WCB/WCC, A105
			Trim:	AISI 316 (L) + Stellite 6
GABB	Gate Valve BW Bellows Sealed	DN	15-40	Body:ASTMA216-WCB/WCC, A105
				Trim:AISI 316 (L) + Stellite 6
GAVB	Gate Valve Butt-Weld. End	DN	15-400	Body:ASTMA216-WCB/WCC, A105
			Trim:	AISI316 (L) + Stellite 6
GAVF	Gate Valve Flanged	DN	15-50	Body:ASTMA216-WCB/WCC, A105
			Trim:	AISI 316 (L) + Stellite 6
GLBB	Globe Valve BW Bellows Sealed	DN	15-40	Body:ASTMA216-WCB/WCC, A105
				Trim:AISI 316 (L) + Stellite 6
GLVB	Globe Valve Butt-Weld. End	DN	15-100	Body:ASTMA216-WCB/WCC, A105
				Trim:AISI 316 (L) + Stellite 6

* MISCELLANEOUS

GKSW	Gasket, Spiral Wound	DN	15-400	AISI	316, 316L, Graphite Filled
					CS Centring-, SS Inner-Ring
ORFS	Orifice Flange Set	DN	50-400	ASTM	A105
STBT	Stud Bolt with Nuts	---	Studs:	ASTM	A193-B7
			Nuts:	ASTM	A194-2H

Class No.: HN10	Page: 3	Content: Piping Components

ITEM DESCRIPTION			NOMINAL PIPE SIZE 15	20	25	40	50	80	100	150	200	250	300	350	400
* PIPE															
Pipe		74.30.21/31	*	*	*	*	*	*	*	*	*	*	*	*	*
* FLANGES															
Blind Flange		76.62.10	*	*	*	*	*	*	*	*	*	*	*	*	*
Spectacle Blind Flange		76.88.06	*	*	*	*	*	*	*	*	*	*	*	*	*
Spacer Ring Type (ANS Flanges)		76.88.16	*	*	*	*	*	*	*	*	*	*	*	*	*
Welding Neck Flange		76.62.79	*	*	*	*	*	*	*	*	*	*	*	*	*
* FITTINGS															
Cap	Butt-Weld. End	76.30.18	*	*	*	*	*	*	*	*	*	*	*	*	*
Elbow 45 Deg.	Butt-Weld. End	76.30.38	*	*	*	*	*	*	*	*	*	*	*	*	*
Elbow 90 Deg.	Butt-Weld. End	76.30.39/40	*	*	*	*	*	*	*	*	*	*	*	*	*
Equal Tee	Butt-Weld. End	76.30.84	*	*	*	*	*	*	*	*	*	*	*	*	*
Elbow 45 Deg.	Socket-Weld. End	76.34.38	*	*	*	*									
Elbow 90 Deg.	Socket-Weld. End	76.34.39	*	*	*	*									
Equal Tee	Socket-Weld. End	76.34.84	*	*	*	*									
Coupling	Socket-Weld. End	76.34.28	*	*	*	*									
Cap	Socket-Weld. End	76.34.18	*	*	*	*									
* VALVES															
Check Valve Butt-Weld. End		75.56.16	*	*	*	*	*	*	*	*	*	*	*	*	*
Gate Valve BW Bellows Sealed		75.56.40	*	*	*	*									
Gate Valve Butt-Weld. End		75.56.40	*		*	*	*	*	*	*	*	*	*	*	*
Gate Valve Flanged		75.37.37	*	*	*	*	*								
Globe Valve BW Bellows Sealed		75.56.54	*	*	*	*									
Globe Valve Butt-Weld. End		75.56.54	*	*	*	*	*	*	*						
* MISCELLANEOUS															
Gasket, Spiral Wound		85.41.37	*	*	*	*	*	*	*	*	*	*	*	*	*
Orifice Flange Set		60.88.52					*	*	*	*	*	*	*	*	*

Class No.:	HN10	Page:	4	Content:	Reducing Piping Components

Run Br.	BROB 76.80.05	RECB 76.30.72	REEB 76.30.73	TERB 76.30.85	TERS 76.34.85
20×15		*	*	*	*
25×15		*	*	*	*
25×20		*	*	*	*
40×15		*	*		*
40×20		*	*	*	*
40×25		*	*	*	*
50×20		*	*		
50×25		*	*		
50×40		*	*	*	
80×40		*	*		
80×50	*	*	*	*	
100×40		*	*		
100×50	*	*	*	*	
100×80	*	*	*	*	
150×50	*				
150×80	*	*	*	*	
150×100	*	*	*	*	
200×50	*				
200×80	*				
200×100	*	*	*	*	
200×150	*	*	*	*	
250×50	*				
250×80	*				
250×100	*	*	*	*	
250×150	*	*	*	*	
250×200	*	*	*	*	
300×50	*				
300×80	*				
300×100	*				
300×150	*	*	*	*	
300×200	*	*	*	*	
300×250	*	*	*	*	
350×50	*				
350×80	*				
350×100	*				
350×150	*	*	*	*	
350×200	*	*	*	*	
350×250	*	*	*	*	
350×300	*	*	*	*	

Run	Br.	BROB 76.80.05	RECB 76.30.72	REEB 76.30.73	TERB 76.30.85
400×50		*			
400×80		*			
400×100		*			
400×150		*	*	*	*
400×200		*	*	*	*
400×250		*	*	*	*
400×300		*	*	*	*
400×350		*	*	*	*

COMP.	NAME	DESCRIPTION
BROS	Branch Fitting Socket-Weld. Outlet	
BROB	Branch Outlet Red. Butt-Weld	
RECB	Reducer Conc. Butt-Weld. End	
REEB	Reducer Ecc. Butt-Weld. End	
TERB	Tee Reducing Butt-Weld. End	
TERS	Tee Reducing Socket-Weld. End	

RUN	Br.	BROS 76.80.26
40-150	15	*
200-400		*
50-80	20	*
100-400		*
50	25	*
80-100		*
150-400		*
80-100	40	*
150-300		*
350-400		*

Class No.: HN10	Page: 4	Content: Reducing Piping Components

BOLT SET FLANGED JOINTS

DN	No.	Inch	mm	81.38.61
15	4	¾ ×	110	*
20	4	¾ ×	120	*
25	4	7/8 ×	130	*
40	4	1 ×	140	*
50	8	7/8 ×	150	*
80	8	11/8 ×	180	*
100	8	11/4 ×	195	*
150	12	13/8 ×	260	*
200	12	15/8 ×	350	*
250	12	17/8 ×	400	*
300	16	2 ×	440	*
350	16	21/4 ×	480	*
400	16	21/2 ×	530	*

BOLT SET SPECTACLE/SPACER

DN	No.	Inch	mm	81.38.61
15	4	¾×	120	*
20	4	3/4×	130	*
25	4	7/8×	140	*
40	4	1×	160	*
50	8	7/8×	170	*
80	8	11/8×	210	*
100	8	11/4×	230	*
150	12	13/8×	300	*
200	12	15/8×	400	*
250	12	17/8×	460	*
300	16	2×	510	*
350	16	21/4×	560	*
400	16	21/2×	620	*

BOLT SET ORIFICE FLANGES

DN	No.	Inch	mm	81.38.61
15	4	7/8 ×	150	*
20	4	7/8 ×	150	*
25	4	7/8 ×	150	*
40	4	1 ×	160	*
50	8	7/8 ×	160	*
80	8	11/8 ×	190	*
100	8	11/4 ×	210	*
150	12	13/8 ×	275	*
200	12	15/8 ×	360	*
250	12	17/8 ×	415	*
300	16	2 ×	455	*
350	16	21/4 ×	500	*
400	16	21/2 ×	550	*

* DRAIN POINT Fig. 0N

Run DN 15-25	Br DN 15	No.
Branch: Table Page 1		1
Blind Flange		1
Gasket Spiral Wound		1
Gate Valve Butt-Weld Ends		1
Pipe Nipple 50 mm		1
Stud Bolt with Nuts		4
Welding Neck Flange		1

* DRAIN POINT Fig. 0N

Run DN 40	Br DN 20	No.
Branch: Table Page 1		1
Blind Flange		1
Gasket Spiral Wound		1
Gate Valve Butt-Weld Ends		1
Pipe Nipple 50 mm		1
Stud Bolt with Nuts		4
Welding Neck Flange		1

DRAIN POINT Fig. 0N

Run DN 50-400	Br DN 20	No.
Branch: Table Page 1		1
Blind Flange		1
Gasket Spiral Wound		1
Gate Valve Butt-Weld Ends		1
Pipe Nipple 50 mm		1
Stud Bolt with Nuts		4
Welding Neck Flange		1

* VENT POINT Fig. 1N

Run DN 15-25	Br DN 15	No.
Run DN 40	Br DN 20	
Branch: Table Page 1		1
Blind Flange		1
Gasket Spiral Wound		1
Globe Valve Butt-Weld Ends		1
Pipe Nipple 50 mm		1
Stud Bolt with Nuts		4
Welding Neck Flange	1	

* VENT POINT Fig. 1N

Run DN 50-400	Br DN 20	No.
Branch: Table Page 1		1
Blind Flange		1
Gasket Spiral Wound		1
Globe Valve Butt-Weld Ends		1
Pipe Nipple 50 mm		1
Stud Bolt with Nuts		4
Welding Neck Flange		1

Class No.: HN14	Page: 1	Content: General

Base Material: Carbon Steel	First Issue:	Revision:	
Rating: PN 250 (Class 1500)		Date:	
Corrosion Allowance: 1 mm		Sign:	

Temperature °C		0	50	100	150	200	250	300	350	400
Pressure Barg.	DN 15-200	255.4	250.4	231.9	226.0	219.1	208.6	193.5	184.7	167.1

TABLE OF SCHEDULES

DN	Schedule
15	160
20	160
25	160
40	160
50	160
80	160
100	160
150	160
200	160

BRANCH CONNECTIONS 90 DEGREES

Run Size	BRANCH SIZE 15	20	25	40	50	80	100	150	200
200	C	C	C	C	E	E	E	E	A
150	C	C	C	C	E	E	E	A	
100	C	C	C	C	E	E	A		
80	C	C	C	C	E	A			
50	C	C	C	B	A				
40	C	B	B	A					
25	B	B	A						
20	B	A							
15	A								

Notes:
- Design limits are acc. flange rating ANSI B16.5 Material Group 1.1 and to allowable internal pressure acc. ANSI B31.3.
- Piston type check valves for horizontal mounting only.
- Application of other types of branch connections is subject to company approval.

CODE	EXPLANATION OFCHARACTERS
A	Equal tee
B	Reducing tee
C	Branch fitting outlet socket-weld
E	Branch outlet reducing butt-weld

* PIPE

PIPE	Pipe	DN	15-200	ASTM	A106-B
PNPP	Pipe Nipple 50 mm	DN	15-40	ASTM	A106-B

* FLANGES

BLFL	Blind Flange	DN	15-200	ASTM	A105
SBFL	Spectacle Blind Flange	DN	15-200	ASTM	A516-60
SPRT	Spacer Ring Type (ANS Flanges)	DN	15-200	ASTM	A516-60
WNFL	Welding Neck Flange	DN	15-200	ASTM	A105

* FITTINGS

CAPB	Cap	Butt-Weld. End	DN	15-200	ASTM	A234-WPB
E45B	Elbow 45 Deg.	Butt-Weld. End	DN	15-200	ASTM	A234-WPB
E90B	Elbow 90 Deg.	Butt-Weld. End	DN	15-200	ASTM	A234-WPB
TEEB	Equal Tee	Butt-Weld. End	DN	15-200	ASTM	A234-WPB
E45S	Elbow 45 Deg.	Socket-Weld. End	DN	15-40	ASTM	A105
E90S	Elbow 90 Deg.	Socket-Weld. End	DN	15-40	ASTM	A105
TEES	Equal Tee	Socket-Weld. End	DN	15-40	ASTM	A105
COUS	Coupling	Socket-Weld. End	DN	15-40	ASTM	A105
CAPS	Cap	Socket-Weld. End	DN	15-40	ASTM	A234-WPB

* REDUCING FITTINGS

BROS	Branch Outlet Socket-Weld. End	DN	15-50	ASTM	A105
BROB	Branch Outlet Red. Butt-Weld.	DN	80-200	ASTM	A105
RECB	Reducer Conc. Butt-Weld. End	DN	20-200	ASTM	A234-WPB
REEB	Reducer Ecc. Butt-Weld. End	DN	20-200	ASTM	A234-WPB
TERB	Tee Reducing Butt-Weld. End	DN	20-200	ASTM	A234-WPB
TERS	Tee Reducing Socket-Weld. End	DN	20-40	ASTM	A105

Note:
- For full material description see relevant MESC buying description.
- Where both socket weld and butt weld fittings are specified, preference is subject to company approval.

* VALVES

CHVB	Check Valve Butt-Weld. End	DN	15-200	Body:	ASTM	A216-WCB/WCC, A105
				Trim:	AISI	316 (L) + Stellite 6
GAVB	Gate Valve Butt-Weld. End	DN	15-200	Body:	ASTM	A216-WCB/WCC, A105
				Trim:	AISI	316 (L) + Stellite 6
GAVF	Gate Valve Flanged	DN	15-50	Body:	ASTM	A216-WCB/WCC, A105
				Trim:	AISI	316 (L) + Stellite 6
GLVB	Globe Valve Butt-Weld. End	DN	15-100	Body:	ASTM	A216-WCB/WCC, A105
				Trim:	AISI	316 (L) + Stellite 6

* MISCELLANEOUS

GKSW	Gasket, Spiral Wound	DN	15-200	AISI	316, 316L, Graphite Filled CS Centring-, SS Inner-Ring	
ORFS	Orifice Flange Set	DN	50-200		ASTM	A105
STBT	Stud Bolt with Nuts		----	Studs:	ASTM	A193-B7
				Nuts:	ASTM	A194-2H

Class No.: HN14	Page: 3	Content: Piping Components

ITEM DESCRIPTION			NOMINAL PIPE SIZE 15	20	25	40	50	80	100	150	200
* PIPE											
Pipe		74.30.21/31	*	*	*	*	*	*	*	*	*
Pipe Nipple 50 mm			*	*	*	*					
* FLANGES											
Blind Flange		76.62.10	*	*	*	*	*	*	*	*	*
Spectacle Blind Flange		76.88.06	*	*	*	*	*	*	*	*	*
Spacer Ring Type (ANS Flanges)		76.88.16	*	*	*	*	*	*	*	*	*
Welding Neck Flange		76.62.79	*	*	*	*	*	*	*	*	*
* FITTINGS											
Cap	Butt-Weld. End	76.30.18	*	*	*	*	*	*	*	*	*
Elbow 45 Deg.	Butt-Weld. End	76.30.38	*	*	*	*	*	*	*	*	*
Elbow 90 Deg.	Butt-Weld. End	76.30.39/40	*	*	*	*	*	*	*	*	*
Equal Tee	Butt-Weld. End	76.30.84	*	*	*	*	*	*	*	*	*
Elbow 45 Deg.	Socket-Weld. End	76.34.38	*	*	*	*					
Elbow 90 Deg.	Socket-Weld. End	76.34.39	*	*	*	*					
Equal Tee	Socket-Weld. End	76.34.84	*	*	*	*					
Coupling	Socket-Weld. End	76.34.28	*	*	*	*					
Cap	Socket-Weld. End	76.34.18	*	*	*	*					
* VALVES											
Check Valve Butt-Weld. End		75.56.16 *	*	*	*	*	*	*	*	*	
Gate Valve Butt-Weld. End		75.56.40 *	*	*	*	*	*	*	*	*	
Gate Valve Flanged		75.37.37 *	*	*	*	*					
Globe Valve Butt-Weld. End		75.56.54 *	*	*	*	*	*	*			
* MISCELLANEOUS											
Gasket, Spiral Wound		85.41.37*	*	*	*	*	*	*	*	*	
Orifice Flange Set		60.88.52				*	*	*	*	*	

Class No.:	HN14	Page:	4	Content:	Reducing Piping Components

Run	Br.	BROB 76.80.05	RECB 76.30.72	REEB 76.30.73	TERB 76.30.85	TERS 76.34.85
20 ×	15		*	*	*	*
25 ×	15		*	*	*	*
25 ×	20		*	*	*	*
40 ×	15		*	*		*
40 ×	20		*	*	*	*
40 ×	25		*	*	*	*
50 ×	20		*	*		*
50 ×	25		*	*		
50 ×	40		*	*	*	
80 ×	40		*	*		
80 ×	50	*	*	*	*	
100 ×	40		*	*		*
100 ×	50	*	*	*	*	
100 ×	80	*	*	*	*	
150 ×	50	*				
150 ×	80	*	*	*	*	
150 ×	100	*	*	*	*	
200 ×	50	*				
200 ×	80	*				
200 ×	100	*	*	*	*	
200 ×	150	*	*	*	*	

COMP. NAME	DESCRIPTION
BROS	Branch Fitting Socket-Weld. Outlet
BROB	Branch Outlet Red. Butt-Weld
RECB	Reducer Conc. Butt-Weld. End
REEB	Reducer Ecc. Butt-Weld. End
TERB	Tee Reducing Butt-Weld. End
TERS	Tee Reducing Socket-Weld. End

RUN	Br.	BROS 76.80.26
40-150	15	*
200		*
50-80	20	*
100-200		*
50	25	*
80-100		*
150-200		*
80-100	40	*
150-200		*

Class No.:	HN14	Page:	5	Content:	Bolting and Assemblies

BOLT SET FLANGED JOINTS

DN	No.	Inch	mm	81.38.61
15	4	¾ ×	110	*
20	4	¾ ×	120	*
25	4	7/8 ×	130	*
40	4	1 ×	140	*
50	8	7/8 ×	150	*
80	8	11/8 ×	180	*
100	8	11/4 ×	195	*
150	12	13/8 ×	260	*
200	12	15/8 ×	350	*

BOLT SET ORIFICE FLANGES

DN	No.	Inch	mm	81.38.61
15	4	7/8 ×	150	*
20	4	7/8 ×	150	*
25	4	7/8 ×	150	*
40	4	1 ×	160	*
50	8	7/8 ×	160	*
80	8	11/8 ×	190	*
100	8	11/4 ×	210	*
150	12	13/8 ×	275	*
200	12	15/8 ×	360	*

BOLT SET SPECTACLE/SPACER

DN	No.	Inch	mm	81.38.61
15	4	¾ ×	120	*
20	4	¾ ×	130	*
25	4	7/8 ×	140	*
40	4	1 ×	160	*
50	8	7/8 ×	170	*
80	8	11/8 ×	210	*
100	8	11/4 ×	230	*
150	12	13/8 ×	300	*
200	12	15/8 ×	400	*

DRAIN POINT Fig. 0M

Run	DN 15-25	Br	DN 15	
Run	DN 40	Br	DN 20	No.
Branch: Table Page 1				1
Blind Flange				1
Gasket Spiral Wound				1
Gate Valve Butt-Weld Ends				1
Stud Bolt with Nuts				4
Welding Neck Flange				1

* DRAIN POINT Fig. 0N

Run	DN 50-200	Br	DN 20	
				No.
Branch: Table Page 1				1
Blind Flange				1
Gasket Spiral Wound				1
Gate Valve Butt-Weld Ends				1
Pipe Nipple 50 mm				1
Stud Bolt with Nuts				4
Welding Neck Flange				1

* VENT POINT Fig. 1M

Run	DN 15-25	Br	DN 15	
Run	DN 40	Br	DN 20	
				No.
Branch: Table Page 1				1
Blind Flange				1
Gasket Spiral Wound				1
Globe Valve Butt-Weld Ends				1
Stud Bolt with Nuts				4
Welding Neck Flange				1

* VENT POINT Fig. 1N

Run	DN 50-200	Br	DN 20	
				No.
Branch: Table Page 1				1
Blind Flange				1
Gasket Spiral Wound				1
Globe Valve Butt-Weld Ends				1
Pipe Nipple 50 mm				1
Stud Bolt with Nuts				4
Welding Neck Flange				1

Class No.: HP02	Page: 1	Content: General
Base Material: Alloy Steel (1.25 Cr - 0.5 Mo)	First Issue: Revision:	
Rating: PN 250 (Class 1500)	Date:	
Corrosion Allowance: 1 mm	Sign:	

Temperature °C	0	50	100	150	200	250	300	350	400	450	
Pressure Barg. DN 15-300		257.6	253.9	239.7	231.9	226.0	222.2	212.1	201.0	183.0	169.0

TABLE OF SCHEDULES

DN	Schedule
15	160
20	160
25	160
40	160
50	160
80	160
100	160
150	160
200	160
250	160
300	160

BRANCH CONNECTIONS 90 DEGREES

Run Size	BRANCH SIZE 15	20	25	40	50	80	100	150	200	250	300
300	C	C	C	C	E	E	E	E	E	E	A
250	C	C	C	C	E	E	E	E	E	A	
200	C	C	C	C	E	E	E	E	A		
150	C	C	C	C	E	E	E	A			
100	C	C	C	C	E	E	A				
80	C	C	C	C	E	A					
50	C	C	C	B	A						
40	C	B	B	A							
25	B	B	A								
20	B	A									
15	A										

Notes:
- Design limits are acc. flange rating ANSI B16.5 Material Group 1.9 and to allowable internal pressure acc ANSI B31.3.
- Piston type check valves for horizontal mounting only.
- Application of other types of branch connections is subject to company approval.

CODE	EXPLANATION OFCHARACTERS
A	Equal tee
B	Reducing tee
C	Branch fitting outlet socket-weld
E	Branch outlet reducing butt-weld

Class No.: HP02	Page: 2	Content: Material Descriptions

* PIPE

PIPE	Pipe	DN	15-300	ASTM	A335-P11 (Seamless)
PNPP	Pipe Nipple 50 mm	DN	15-40	ASTM	A335-P11 (Seamless)

* FLANGES

BLFL	Blind Flange	DN	15-300	ASTM	A182-F11
SBFL	Spectacle Blind Flange	DN	15-300	ASTM	A387-11 CL. 2
SPRT	Spacer Ring Type (ANS Flanges)	DN	15-300	ASTM	A387-11 CL. 2
WNFL	Welding Neck Flange	DN	15-300	ASTM	A182-F11

* FITTINGS

CAPB	Cap	Butt-Weld. End	DN	15-300	ASTM	A234-WP11
E45B	Elbow 45 Deg.	Butt-Weld. End	DN	15-300	ASTM	A234-WP11
E90B	Elbow 90 Deg.	Butt-Weld. End	DN	15-300	ASTM	A234-WP11
TEEB	Equal Tee	Butt-Weld. End	DN	15-300	ASTM	A234-WP11
E45S	Elbow 45 Deg.	Socket-Weld. End	DN	15-40	ASTM	A182-F11
E90S	Elbow 90 Deg.	Socket-Weld. End	DN	15-40	ASTM	A182-F11
TEES	Equal Tee	Socket-Weld. End	DN	15-40	ASTM	A182-F11
COUS	Coupling	Socket-Weld. End	DN	15-40	ASTM	A182-F11
CAPS	Cap	Socket-Weld. End	DN	15-40	ASTM	A182-F11

* REDUCING FITTINGS

BROS	Branch Outlet Socket-Weld. End	DN	-	ASTM	A182-F11
BROB	Branch Outlet Red. Butt-Weld.	DN	80-300	ASTM	A182-F11
RECB	Reducer Conc. Butt-Weld. End	DN	20-300	ASTM	A234-WP11
REEB	Reducer Ecc. Butt-Weld. End	DN	20-300	ASTM	A234-WP11
TERB	Tee Reducing Butt-Weld. End	DN	20-25	ASTM	A234-WP11
TERS	Tee Reducing Socket-Weld. End	DN	20-40	ASTM	A182-F11

Note:
- For full material description see relevant MESC buying description.
- Where both socket weld and butt weld fittings are specified, preference is subject to company approval.

* VALVES

CHVB	Check Valve Butt-Weld. End	DN	15-300	Body:	ASTM	A217-WC6, A182-F11
				Trim:	AISI	316 (L) + Stellite 6
GABB	Gate Valve BW Bellows Sealed	DN	15-40	Body:	ASTM	A217-WC6, A182-F11
				Trim:	AISI	316 (L) + Stellite 6
GAVB	Gate Valve Butt-Weld. End	DN	15-300	Body:	ASTM	A217-WC6, A182-F11
				Trim:	AISI	316 (L) + Stellite 6
GAVF	Gate Valve Flanged	DN	15-50	Body:	ASTM	A217-WC6, A182-F11
				Trim:	AISI	316 (L) + Stellite 6
GLBB	Globe Valve BW Bellows Sealed	DN	15-40	Body:	ASTM	A217-WC6, A182-F11
				Trim:	AISI	316 (L) + Stellite 6
GLVB	Globe Valve Butt-Weld. End	DN	15-100	Body:	ASTM	A217-WC6, A182-F11
				Trim:	AISI	316 (L) + Stellite 6

* MISCELLANEOUS

GKSW	Gasket, Spiral Wound	DN	15-300	AISI	316, 316L, Graphite Filled CS Centring-, SS Inner-Ring
ORFS	Orifice Flange Set	DN	50-300		ASTM A182-F11
STBT	Stud Bolt with Nuts	----	Studs:	ASTM	A193-B16
			Nuts:	ASTM	A194-4

Class No.: HP02	Page: 3	Content: Piping Components

ITEM DESCRIPTION			NOMINAL PIPE SIZE 15	20	25	40	50	80	100	150	200	250	300
* PIPE													
Pipe		74.33.11	*	*	*	*	*	*	*	*	*	*	*
Pipe Nipple 50 mm			*	*	*	*							
* FLANGES													
Blind Flange		76.64.10	*	*	*	*	*	*	*	*	*	*	*
Spectacle Blind Flange		76.88.07	*	*	*	*	*	*	*	*	*	*	*
Spacer Ring Type (ANS Flanges)			*	*	*	*	*	*	*	*	*	*	*
Welding Neck Flange		76.64.80	*	*	*	*	*	*	*	*	*	*	*
* FITTINGS													
Cap	Butt-Weld. End	76.32.18	*	*	*	*	*	*	*	*	*	*	*
Elbow 45 Deg.	Butt-Weld. End	76.32.38	*	*	*	*	*	*	*	*	*	*	*
Elbow 90 Deg.	Butt-Weld. End	76.32.39	*	*	*	*	*	*	*	*	*	*	*
Equal Tee	Butt-Weld. End	76.32.84	*	*	*	*	*	*	*	*	*	*	*
Elbow 45 Deg.	Socket-Weld. End	76.36.38	*	*	*	*							
Elbow 90 Deg.	Socket-Weld. End	76.36.39	*	*	*								
Equal Tee	Socket-Weld. End	76.36.80	*	*	*	*							
Coupling	Socket-Weld. End	76.36.28	*	*	*	*							
Cap	Socket-Weld. End	76.36.18	*	*	*	*							
* VALVES													
Check Valve Butt-Weld. End		75.59.10	*	*	*	*	*	*	*	*	*	*	*
Gate Valve BW Bellows Sealed		75.59.30	*	*	*	*							
Gate Valve Butt-Weld. End		75.59.30	*	*	*	*	*	*	*	*	*	*	*
Gate Valve Flanged		75.44.33	*	*	*	*	*						
Globe Valve BW Bellows Sealed		75.59.40	*	*	*	*							
Globe Valve Butt-Weld. End		75.59.40	*	*	*	*	*	*	*				
* MISCELLANEOUS													
Gasket, Spiral Wound		85.41.37	*	*	*	*	*	*	*	*	*	*	*
Orifice Flange set		60.88.52					*	*	*	*	*	*	*

Class No.: HP02	Page: 4	**Content:** **Reducing Piping Components**

Run		Br.	BROB 76.79.27	RECB 76.32.70	REEB 76.32.71	TERB 76.32.85	TERS 76.34.85
20	×	15		*	*	*	*
25	×	15		*	*	*	*
25	×	20		*	*	*	*
40	×	15		*	*		*
40	×	20		*	*		*
40	×	25		*	*		*
50	×	20		*	*		
50	×	25		*	*		
50	×	40		*	*		
80	×	40		*	*		
80	×	50	*	*	*		
100	×	40		*	*		
100	×	50	*	*	*		
100	×	80	*	*	*		
150	×	50	*				
150	×	80	*	*	*		
150	×	100	*	*	*		
200	×	50	*				
200	×	80	*				
200	×	100	*	*	*		
200	×	150	*	*	*		
250	×	50	*				
250	×	80	*				
250	×	100	*	*	*		
250	×	150	*	*	*		
250	×	200	*	*	*		
300	×	50	*				
300	×	80	*				
300	×	100	*				
300	×	150	*	*	*		
300	×	200	*	*	*		
300	×	250	*	*	*		

COMP. NAME	DESCRIPTION
BROS	Branch Fitting Socket-Weld. Outlet
BROB	Branch Outlet Red. Butt-Weld
RECB	Reducer Conc. Butt-Weld. End
REEB	Reducer Ecc. Butt-Weld. End
TERB	Tee Reducing Butt-Weld. End
TERS	Tee Reducing Socket-Weld. End

RUN	Br.	BROB 76.80.26
40-150	15	*
200-300		*
50-80	20	*
100-300		*
50	25	*
80-100		*
150-300		*
80-100	40	*
150-300		*

Class No.:	HP02	Page:	5	Content:	Bolting and Assemblies

BOLT SET FLANGED JOINTS

DN	No.	Inch		mm	81.38.96
15	4	¾	×	110	*
20	4	¾	×	120	*
25	4	7/8	×	130	*
40	4	1	×	140	*
50	8	7/8	×	150	*
80	8	11/8	×	180	*
100	8	11/4	×	195	*
150	12	13/8	×	260	*
200	12	15/8	×	350	*
250	12	17/8	×	400	*
300	16	2	×	440	*

BOLT SET SPECTACLE/SPACER

DN	No.	Inch		mm	81.38.96
15	4	¾	×	120	*
20	4	¾	×	130	*
25	4	7/8	×	140	*
40	4	1	×	160	*
50	8	7/8	×	170	*
80	8	11/8	×	210	*
100	8	11/4	×	230	*
150	12	13/8	×	300	*
200	12	15/8	×	400	*
250	12	17/8	×	460	*
300	16	2	×	510	*

BOLT SET ORIFICE FLANGES

DN	No.	Inch		mm	81.38.96
15	4	7/8	×	150	*
20	4	7/8	×	150	*
25	4	7/8	×	150	*
40	4	1	×	160	*
50	8	7/8	×	160	*
80	8	11/8	×	190	*
100	8	11/4	×	210	*
150	12	13/8	×	275	*
200	12	15/8	×	360	*
250	12	17/8	×	415	*
300	16	2	×	455	*

DRAIN POINT Fig. 0N

Run	DN 15-25	Br	DN 15	No.
Run	DN 40	Br	DN 20	
Branch: Table Page 1				1
Blind Flange				1
Gasket Spiral Wound				1
Gate Valve Butt-Weld Ends				1
Pipe Nipple 50 mm				1
Stud Bolt with Nuts				4
Welding Neck Flange				1

* DRAIN POINT Fig. 0N

Run	DN 50-300	Br	DN 20	
				No.
Branch: Table Page 1				1
Blind Flange				1
Gasket Spiral Wound				1
Gate Valve Butt-Weld Ends				1
Pipe Nipple 50 mm				1
Stud Bolt with Nuts				4
Welding Neck Flange				1

* VENT POINT Fig. 1N

Run	DN 15-25	Br	DN 15	
Run	DN 40	Br	DN 20	
				No.
Branch: Table Page 1				1
Blind Flange				1
Gasket Spiral Wound				1
Globe Valve Butt-Weld Ends				1
Pipe Nipple 50 mm				1
Stud Bolt with Nuts				4
Welding Neck Flange				1

* VENT POINT Fig. 1N

Run	DN 50-300	Br	DN 20	
				No.
Branch: Table Page 1				1
Blind Flange				1
Gasket Spiral Wound				1
Globe Valve Butt-Weld Ends				1
Pipe Nipple 50 mm				1
Stud Bolt with Nuts				4
Welding Neck Flange				1

Class No.: HS06	Page: 1	Content: General
Base Material: Stainless Steel AISI 321/347	First Issue: Revision:	
Rating: PN 250 (Class 1500)	Date:	
Corrosion Allowance: 0 mm	Sign:	

Temperature °C		0	50	100	150	200	250	300	350	400	450
Pressure Barg.	DN 15-50	236.8	231.0	207.6	187.5	171.7	160.1	152.6	146.6	143.0	140.9
	DN 80-100	190.7	190.7	190.7	187.5	171.7	160.1	152.6	146.6	143.0	140.9

TABLE OF SCHEDULES

DN	Schedule
15	80S
20	80S
25	80S
40	80S
50	80S
80	80S
100	80S

BRANCH CONNECTIONS 90 DEGREES

Run Size	BRANCH SIZE 15	20	25	40	50	80	100
100	C	C	C	C	E	E	A
80	C	C	C	C	E	A	
50	C	C	C	B	A		
40	C	B	B	A			
25	B	B	A				
20	B	A					
15	A						

Notes:
- Design limits are acc. flange rating ANSI B16.5 Material Group 2.4 and to allowable internal pressure acc. ANSI B31.3 and to bolting material.
- Application of other types of branch connections is subject to company approval.

CODE	EXPLANATION OFCHARACTERS
A	Equal tee
B	Reducing tee
C	Branch fitting outlet socket-weld
E	Branch outlet reducing butt-weld

Class No.: HS06	Page: 2	Content: Material Descriptions

* PIPE

PIPE	Pipe	DN	15-100	ASTM	A312-TP321/347 (Seamless or Welded)
PNPP	Pipe Nipple 50 mm	DN	15-40	ASTM	A312-TP321/347 (Seamless)

* FLANGES

BLFL	Blind Flange	DN	15-100	ASTM	A182-F321/347
SBFL	Spectacle Blind Flange	DN	15-100	ASTM	A240-TP321/347
SPRT	Spacer Ring Type (ANS Flanges)	DN	15-100	ASTM	A240-TP321/347
WNFL	Welding Neck Flange	DN	15-100	ASTM	A182-F321/347

* FITTINGS

CAPB	Cap	Butt-Weld. End	DN	15-100	ASTM	A403-WP321/347
E45B	Elbow 45 Deg.	Butt-Weld. End	DN	15-100	ASTM	A403-WP321/347
E90B	Elbow 90 Deg.	Butt-Weld. End	DN	15-100	ASTM	A403-WP321/347
TEEB	Equal Tee	Butt-Weld. End	DN	15-100	ASTM	A403-WP321/347
E45S	Elbow 45 Deg.	Socket-Weld. End	DN	15-40	ASTM	A182-F321/347
E90S	Elbow 90 Deg.	Socket-Weld. End	DN	15-40	ASTM	A182-F321/347
TEES	Equal Tee	Socket-Weld. End	DN	15-40	ASTM	A182-F321/347
COUS	Coupling	Socket-Weld. End	DN	15-40	ASTM	A182-F321/347
CAPS	Cap	Socket-Weld. End	DN	15-40	ASTM	A182-F321/347

* REDUCING FITTINGS

BROS	Branch Outlet Socket-Weld. End	DN	15-50	ASTM	A182-F321/347
BROB	Branch Outlet Red. Butt-Weld.	DN	80-100	ASTM	A182-F321/347
RECB	Reducer Conc. Butt-Weld. End	DN	20-100	ASTM	A403-WP321/347
REEB	Reducer Ecc. Butt-Weld. End	DN	20-100	ASTM	A403-WP321/347
TERB	Tee Reducing Butt-Weld. End	DN	20-50	ASTM	A403-WP321/347
TERS	Tee Reducing Socket-Weld. End	DN	20-40	ASTM	A182-F321/347

Note:
- For full material description see relevant MESC buying description.
- Where both socket weld and butt weld fittings are specified, preference is subject to company approval.

* VALVES

CHVF	Check Valve Flanged	DN	15-100	Body:	ASTM	A351-CF8C, A182-F321
				Trim:	AISI	321
GAVF	Gate Valve Flanged	DN	15-100	Body:	ASTM	A351-CF8C, A182-F321
				Trim:	AISI	321
GLVF	Globe Valve Flanged	DN	15-100	Body:	ASTM	A351-CF8C, A182-F321
				Trim:	AISI	321

* MISCELLANEOUS

GKSW	Gasket, Spiral Wound	DN	15-100	AISI	316, 316L, Graphite Filled CS Centring-, SS Inner-Ring
ORFS	Orifice Flange Set	DN	50-100	ASTM	A182-F321/347
STBT	Stud Bolt with Nuts		---	ASTM	A453-Gr. 660, CL.

Class No.: HS06	Page: 3	Content: Piping Components

ITEM DESCRIPTION			NOMINAL PIPE SIZE 15	20	25	40	50	80	100
PIPE									
Pipe		74.36.40	*	*	*	*	*	*	*
* FLANGES									
Blind Flange		76.65.10	*	*	*	*	*	*	*
Spectacle Blind Flange		76.88.07	*	*	*	*	*	*	*
Spacer Ring Type (ANS Flanges)			*	*	*	*	*	*	*
Welding Neck Flange		76.65.80	*	*	*	*	*	*	*
* FITTINGS									
Cap	Butt-Weld. End	76.33.18	*	*	*	*	*	*	*
Elbow 45 Deg.	Butt-Weld. End	76.33.38	*	*	*	*	*	*	*
Elbow 90 Deg.	Butt-Weld. End	76.33.39	*	*	*	*	*	*	*
Equal Tee	Butt-Weld. End	76.33.84	*	*	*	*	*	*	*
Elbow 45 Deg.	Socket-Weld. End	76.37.38	*	*	*	*			
Elbow 90 Deg.	Socket-Weld. End	76.37.39	*	*	*	*			
Equal Tee	Socket-Weld. End	76.37.80	*	*	*	*			
Coupling	Socket-Weld. End	76.37.28	*	*	*	*			
Cap	Socket-Weld. End	76.37.18	*	*	*	*			
* VALVES									
Check Valve Flanged		75.40.11	*	*	*	*	*	*	*
Gate Valve Flanged		75.40.31	*	*	*	*	*	*	*
Globe Valve Flanged		75.40.41	*	*	*	*	*	*	*
* MISCELLANEOUS									
Gasket, Spiral Wound		85.41.37	*	*	*	*	*	*	*
Orifice Flange Set		60.88.52					*	*	*

Class No.: HS06	Page: 4	**Content:** **Reducing Piping Components**

Run		Br.	BROB	RECB 76.33.70	REEB 76.33.73	TERB 76.33.85	TERS 76.37.85
2 0	×	15		*	*	*	*
25	×	15		*	*	*	*
25	×	20		*	*	*	*
40	×	15		*	*	*	*
40	×	20		*	*	*	*
40	×	25		*	*	*	*
50	×	20		*	*		
50	×	25		*	*		
50	×	40		*	*	*	
80	×	40		*	*		
80	×	50	*	*	*		
100	×	40		*	*		
100	×	50	*	*	*		
100	×	80	*	*	*		

COMP. NAME	DESCRIPTION
BROS	Branch Fitting Socket-Weld. Outlet
BROB	Branch Outlet Red. Butt-Weld
RECB	Reducer Conc. Butt-Weld. End
REEB	Reducer Ecc. Butt-Weld. End
TERB	Tee Reducing Butt-Weld. End
TERS	Tee Reducing Socket-Weld. End

RUN	Br.	BROS 76.80.61
40-100	15	*
50-80	20	*
100		*
50	25	*
80-100		*
80-100	40	*

Class No.: HS06	Page: 5	Content: Bolting and Assemblies

BOLT SET FLANGED JOINTS

DN	No.	Inch		mm	81.38.40
15	4	¾	×	110	*
20	4	¾	×	120	*
25	4	7/8	×	130	*
40	4	1	×	140	*
50	8	7/8	×	150	*
80	8	11/8	×	180	*
100	8	11/4	×	195	*

BOLT SET SPECTACLE/SPACER

DN	No.	Inch		mm	81.38.40
15	4	¾	×	120	*
20	4	¾	×	130	*
25	4	7/8	×	140	*
40	4	1	×	160	*
50	8	7/8	×	170	*
80	8	11/8	×	210	*
100	8	11/4	×	230	*

BOLT SET ORIFICE FLANGES

DN	No.	Inch		mm	81.38.40
15	4	7/8	×	150	*
20	4	7/8	×	150	*
25	4	7/8	×	150	*
40	4	1	×	160	*
50	8	7/8	×	160	*
80	8	11/8	×	190	*
100	8	11/4	×	210	*

DRAIN POINT Fig. 0I

Run	DN 15-25	Br	DN 15
Run	DN 40	Br	DN 20

	No.
Branch: Table Page 1	1
Blind Flange	1
Gasket Spiral Wound	2
Gate Valve Flanged	1
Stud Bolt with Nuts	8
Welding Neck Flange	1

* DRAIN POINT Fig. 0J

Run	DN 50-100	Br	DN 20

	No.
Branch: Table Page 1	1
Blind Flange	1
Gasket Spiral Wound	2
Gate Valve Flanged	1
Pipe Nipple 50 mm	1
Stud Bolt with Nuts	8
Welding Neck Flange	1

* VENT POINT Fig. 1I

Run	DN 15-25	Br	DN 15
Run	DN 40	Br	DN 20

	No.
Branch: Table Page 1	1
Blind Flange	1
Gasket Spiral Wound	2
Globe Valve Flanged	1
Stud Bolt with Nuts	8
Welding Neck Flange	1

* VENT POINT Fig. 1J

Run	DN 50-100	Br	DN 20

	No.
Branch: Table Page 1	1
Blind Flange	1
Gasket Spiral Wound	2
Globe Valve Flanged	1
Pipe Nipple 50 mm	1
Stud Bolt with Nuts	8
Welding Neck Flange	1

Class No.: JN01	Page: 1	Content: General

Base Material: Carbon Steel	First Issue:	Revision:	
Rating: PN 420 (Class 2500)		Date:	
Corrosion Allowance: 1 mm		Sign:	

Temperature °C		0	200	250	300	350	400
Pressure Barg.	DN 15-300	257.6	257.6	245.9	228.5	217.4	166.3

TABLE OF SCHEDULES

DN	Schedule
15	160
20	160
25	160
40	160
50	160
80	160
100	160
150	160
200	160
250	160
300	160

BRANCH CONNECTIONS 90 DEGREES

Run Size	BRANCH SIZE 15	20	25	40	50	80	100	150	200	250	300
300	C	C	C	C	E	E	E	B	B	B	A
250	C	C	C	C	E	E	E	B	B	A	
200	C	C	C	C	E	E	B	B	A		
150	C	C	C	C	E	B	B	A			
100	C	C	C	C	B	B	A				
80	C	C	C	B	B	A					
50	C	C	C	B	A						
40	C	B	B	A							
25	B	B	A								
20	B	A									
15	A										

Notes:
- Design limits are based on allowable internal pressure, according to ANSI B31.3.
- Application of other types of branch connections is subject to company approval.

CODE	EXPLANATION OFCHARACTERS
A	Equal tee
B	Reducing tee
C	Branch fitting outlet socket-weld
E	Branch outlet reducing butt-weld

* PIPE

PIPE	Pipe	DN	15-300	ASTM	A106-B
PNPP	Pipe Nipple 50 mm	DN	15-40	ASTM	A106-B

* FLANGES

BLFL	Blind Flange	DN	15-300	ASTM	A105
SBFL	Spectacle Blind Flange	DN	15-300	ASTM	A516-60
SPRT	Spacer Ring Type (ANS Flanges)	DN	15-300	ASTM	A516-60
WNFL	Welding Neck Flange	DN	15-300	ASTM	A105

* FITTINGS

CAPB	Cap	Butt-Weld. End	DN	15-300	ASTM	A234-WPB
E45B	Elbow 45 Deg.	Butt-Weld. End	DN	15-300	ASTM	A234-WPB
E90B	Elbow 90 Deg.	Butt-Weld. End	DN	15-300	ASTM	A234-WPB
TEEB	Equal Tee	Butt-Weld. End	DN	15-300	ASTM	A234-WPB
E45S	Elbow 45 Deg.	Socket-Weld. End	DN	15-40	ASTM	A105
E90S	Elbow 90 Deg.	Socket-Weld. End	DN	15-40	ASTM	A105
TEES	Equal Tee	Socket-Weld. End	DN	15-40	ASTM	A105
COUS	Coupling	Socket-Weld. End	DN	15-40	ASTM	A105
CAPS	Cap	Socket-Weld. End	DN	15-40	ASTM	A105

* REDUCING FITTINGS

BROS	Branch Outlet Socket-Weld. End	DN	15-50	ASTM	A105
BROB	Branch Outlet Red. Butt-Weld.	DN	80-300	ASTM	A105
RECB	Reducer Conc. Butt-Weld. End	DN	20-300	ASTM	A234-WPB
REEB	Reducer Ecc. Butt-Weld. End	DN	20-300	ASTM	A234-WPB
TERB	Tee Reducing Butt-Weld. End	DN	20-300	ASTM	A234-WPB
TERS	Tee Reducing Socket-Weld. End	DN	20-40	ASTM	A105

Note:
- For full material description see relevant MESC buying description.
- Where both socket weld and butt weld fittings are specified, preference is subject to company approval.

* VALVES

CHVF	Check Valve Flanged	DN	15-40	Body:	ASTM	A216-WCB/WCC, A105
				Trim:	AISI	316 (L) + Stellite 6
		DN	50-300	Body:	ASTM	A216-WCB/WCC, A105
				Trim:	AISI	410
GAVF	Gate Valve Flanged	DN	15-40	Body:	ASTM	A216-WCB/WCC, A105
				Trim:	AISI	316 (L) + Stellite 6
		DN	50-300	Body:	ASTM	A216-WCB/WCC, A105
				Trim:	AISI	410
GLVF	Globe Valve Flanged	DN	15-40	Body:	ASTM	A216-WCB/WCC, A105
				Trim:	AISI	316 (L) + Stellite 6
		DN	50-100	Body:	ASTM	A216-WCB/WCC, A105
			Trim:	AISI	410	

* MISCELLANEOUS

GKSW	Gasket, Spiral Wound	DN	15-300	AISI	316, 316L, Graphite Filled, CS Centring-, SS Inner-Ring
ORFS	Orifice Flange Set	DN	50-300		ASTM A105
STBT	Stud Bolt with Nuts		---	Studs:	ASTM A193-B7
				Nuts:	ASTM A194-2H

Class No.: JN01	Page: 3	Content: Piping Components

ITEM DESCRIPTION			NOMINAL PIPE SIZE 15	20	25	40	50	80	100	150	200	250	300
* PIPE													
Pipe		74.30.21/31	*	*	*	*	*	*	*	*	*	*	*
Pipe Nipple 50 mm			*	*	*	*							
* FLANGES													
Blind Flange		76.62.10	*	*	*	*	*	*	*	*	*	*	*
Spectacle Blind Flange		76.88.06	*	*	*	*	*	*	*	*	*	*	*
Spacer Ring Type (ANS Flanges)		76.88.16	*	*	*	*	*	*	*	*	*	*	*
Welding Neck Flange		76.62.79	*	*	*	*	*	*	*	*	*	*	*
* FITTINGS													
Cap	Butt-Weld. End	76.30.18	*	*	*	*	*	*	*	*	*	*	*
Elbow 45 Deg.	Butt-Weld. End	76.30.38	*	*	*	*	*	*	*	*	*	*	*
Elbow 90 Deg.	Butt-Weld. End	76.30.39/40	*	*	*	*	*	*	*	*	*	*	*
Equal Tee	Butt-Weld. End	76.30.84	*	*	*	*	*	*	*	*	*	*	*
Elbow 45 Deg.	Socket-Weld. End	76.34.38	*	*	*	*							
Elbow 90 Deg.	Socket-Weld. End	76.34.39	*	*	*	*							
Equal Tee	Socket-Weld. End	76.34.84	*	*	*	*							
Coupling	Socket-Weld. End	76.34.28	*	*	*	*							
Cap	Socket-Weld. End	76.34.18	*	*	*	*							
* VALVES													
Check Valve Flanged		75.37.18					*	*	*	*	*	*	*
			*	*	*	*							
Gate Valve Flanged		75.37.38			*	*	*	*	*	*	*		
			*	*	*	*							
Globe Valve Flanged		75.37.48			*	*	*						
				*	*	*	*						
* MISCELLANEOUS													
Gasket, Spiral Wound		85.41.37	*	*	*	*	*	*	*	*	*	*	*
Orifice Flange Set		60.88.52					*	*	*	*	*	*	*

Class No.:	JN01	Page:	4	**Content:**	**Reducing Piping Components**

Run		Br.	BROB 76.80.05	RECB 76.30.72	REEB 76.30.73	TERB 76.30.85	TERS 76.34.85
20	×	15		*	*	*	*
25	×	15		*	*	*	*
25	×	20		*	*	*	*
40	×	15		*	*		*
40	×	20		*	*	*	*
40	×	25		*	*	*	*
50	×	20		*	*		
50	×	25		*	*		
50	×	40		*	*	*	
80	×	40		*	*		
80	×	50	*	*	*	*	
100	×	40		*	*		
100	×	50	*	*	*	*	
100	×	80	*	*	*	*	
150	×	50	*				
150	×	80	*	*	*	*	
150	×	100	*	*	*	*	
200	×	50	*				
200	×	80	*				
200	×	100	*	*	*	*	
200	×	150	*	*	*	*	
250	×	50	*				
250	×	80	*				
250	×	100	*	*	*	*	
250	×	150	*	*	*	*	
250	×	200	*	*	*	*	
300	×	50	*				
300	×	80	*				
300	×	100	*				
300	×	150	*	*	*	*	
300	×	200	*	*	*	*	
300	×	250	*	*	*	*	

COMP. NAME	DESCRIPTION
BROS	Branch Fitting Socket-Weld. Outlet
BROB	Branch Outlet Red. Butt-Weld
RECB	Reducer Conc. Butt-Weld. End
REEB	Reducer Ecc. Butt-Weld. End
TERB	Tee Reducing Butt-Weld. End
TERS	Tee Reducing Socket-Weld. End

RUN	Br.	BROB 76.80.26
40-150	15	*
200-300		*
50-80	20	*
100-300		*
50	25	*
80-100		*
150-300		*
80-100	40	*
150-300		*

Class No.: JN01	Page: 5	Content: Bolting and Assemblies

BOLT SET FLANGED JOINTS

DN	No.	Inch		mm	81.38.61
15	4	¾	×	130	*
20	4	¾	×	130	*
25	4	7/8	×	140	*
40	4	11/8	×	170	*
50	8	1	×	180	*
80	8	11/4	×	220	*
100	8	11/2	×	300	*
150	8	2	×	410	*
200	12	2	×	445	*
250	12	21/2	×	570	*
300	12	23/4	×	630	*

BOLT SET SPECTACLE/SPACER

DN	No.	Inch		mm	81.38.61
15	4	¾	×	140	*
20	4	¾	×	140	*
25	4	7/8	×	160	*
40	4	11/8	×	190	*
50	8	1	×	210	*
80	8	11/4	×	260	*
100	8	11/2	×	345	*
150	8	2	×	455	*
200	12	2	×	510	*
250	12	21/2	×	640	*
300	12	23/4	×	720	*

BOLT SET ORIFICE FLANGES

DN	No.	Inch		mm	81.38.61
50	8	1	×	190	*
80	8	11/4	×	230	*
100	8	11/2	×	320	*
150	8	2	×	415	*
200	12	2	×	455	*
250	12	21/2	×	570	*
300	12	23/4	×	640	*

DRAIN POINT Fig. 0M

Run	DN 15-25	Br	DN 15
Run	DN 40	Br	DN 20

	No.
Branch: Table Page 1	1
Blind Flange	1
Gasket Spiral Wound	1
Gate Valve Butt-Weld. End	1
Stud Bolt with Nuts	4
Welding Neck Flange	1

* DRAIN POINT Fig. 0N

Run	DN 50-300	Br	DN 20

	No.
Branch: Table Page 1	1
Blind Flange	1
Gasket Spiral Wound	1
Gate Valve Butt-Weld. End	1
Pipe Nipple 50 mm	1
Stud Bolt with Nuts	4
Welding Neck Flange	1

* VENT POINT Fig. 1M

Run	DN 15-25	Br	DN 15
Run	DN 40	Br	DN 20

	No.
Branch: Table Page 1	1
Blind Flange	1
Gasket Spiral Wound	1
Globe Valve Butt-Weld. End	1
Stud Bolt with Nuts	4
Welding Neck Flange	1

* VENT POINT Fig. 1N

Run	DN 50-300	Br	DN 20

	No.
Branch: Table Page 1	1
Blind Flange	1
Gasket Spiral Wound	1
Globe Valve Butt-Weld. End	1
Pipe Nipple 50 mm	1
Stud Bolt with Nuts	4
Welding Neck Flange	1

Class No.: JP05	Page: 1	Content: General

Base Material: Alloy Steel (2.25 Cr, 1.0 Mo)	First Issue:	Revision:	
Rating: PN 420 (Class 2500)		Date:	
Corrosion Allowance: 1 mm		Sign:	

Temperature °C		0	100	150	200	400	450	500	538
Pressure Barg.	DN 15-300	257.6	237.5	231.8	230.6	230.5	193.5	148.4	100.1

TABLE OF SCHEDULES

DN	Schedule
15	160
20	160
25	160
40	160
50	160
80	160
100	160
150	160
200	160
250	160
300	160

BRANCH CONNECTIONS 90 DEGREES

Run Size	BRANCH SIZE 15	20	25	40	50	80	100	150	200	250	300
300	C	C	C	C	E	E	E	B	B	B	A
250	C	C	C	C	E	E	E	B	B	A	
200	C	C	C	C	E	E	B	B	A		
150	C	C	C	C	E	B	B	A			
100	C	C	C	C	B	B	A				
80	C	C	C	B	B	A					
50	C	C	C	B	A						
40	C	B	B	A							
25	B	B	A								
20	B	A									
15	A										

Notes:
- Design limits are based on allowable internal pressure, according to ANSI B31.3.
- For temperature points a branch outlet (DN 50) shall be used for nominal pipe sizes DN 80 and above.
- Bolt diameter limited to 2 inch.
- Piston type check valves for horizontal mounting only.
- Application of other types of branch connections is subject to company approval.

CODE	EXPLANATION OFCHARACTERS
A	Equal tee
B	Reducing tee
C	Branch fitting outlet socket-weld
E	Branch outlet reducing butt-weld

* PIPE

PIPE	Pipe	DN	15-300	ASTM	A335-P22Seamless
PNPP	Pipe Nipple 50 mm	DN	15-40	ASTM	A335-P22Seamless

* FLANGES

BLFL	Blind Flange	DN	15-300	ASTM	A182-F22-CL3
SBFL	Spectacle Blind Flange	DN	15-300	ASTM	A387-22-CL2
SPRT	Spacer Ring Type (ANS Flanges)	DN	15-300	ASTM	A387-22-CL2
WNFL	Welding Neck Flange	DN	15-300	ASTM	A182-F22-CL3

* FITTINGS

CAPB	Cap	Butt-Weld. End	DN	15-300	ASTM	A234-WP22-CL3
E45B	Elbow 45 Deg.	Butt-Weld. End	DN	15-300	ASTM	A234-WP22-CL3
E90B	Elbow 90 Deg.	Butt-Weld. End	DN	15-300	ASTM	A234-WP22-CL3
TEEB	Equal Tee	Butt-Weld. End	DN	15-300	ASTM	A234-WP22-CL3
E45S	Elbow 45 Deg.	Socket-Weld. End	DN	15-40	ASTM	A182-F22-CL3
E90S	Elbow 90 Deg.	Socket-Weld. End	DN	15-40	ASTM	A182-F22-CL3
TEES	Equal Tee	Socket-Weld. End	DN	15-40	ASTM	A182-F22-CL3
COUS	Coupling	Socket-Weld. End	DN	15-40	ASTM	A182-F22-CL3
CAPS	Cap	Socket-Weld. End	DN	15-40	ASTM	A182-F22-CL3

* REDUCING FITTINGS

BROS	Branch Outlet Socket-Weld. End	DN	15-50	ASTM	A182-F22-CL3
BROB	Branch Outlet Red. Butt-Weld.	DN	80-300	ASTM	A182-F22-CL3
RECB	Reducer Conc. Butt-Weld. End	DN	20-300	ASTM	A234-WP22-CL3
REEB	Reducer Ecc. Butt-Weld. End	DN	20-300	ASTM	A234-WP22-CL3
TERB	Tee Reducing Butt-Weld. End	DN	20-300	ASTM	A234-WP22-CL3
TERS	Tee Reducing Socket-Weld. End	DN	20-40	ASTM	A182-F22-CL3

Note:
- For full material description see relevant MESC buying description.
- Where both socket weld and butt weld fittings are specified, preference is subject to company approval.

* VALVES

CHSB	Check Valve B.W. Special Class	DN	15-300	Body:	ASTM	A182-F22-CL3
				Trim:	AISI	316 (L) + Stellite 6
GASB	Gate Valve B.W. Special Class	DN	15-300	Body:	ASTM	A182-F22-CL3
				Trim:	AISI	316 (L) + Stellite 6
GLSB	Globe Valve B.W. Special Class	DN	15-100	Body:	ASTM	A182-F22-CL3
				Trim:	AISI	316 (L) + Stellite 6

* MISCELLANEOUS

GKSW	Gasket, Spiral Wound	DN	15-300	AISI	316, 316L, Graphite Filled, CS Centring-, SS Inner-Ring	
ORFS	Orifice Flange Set	DN	50-200		ASTM	A182-F22-CL3
STBT	Stud Bolt with Nuts		---	Studs:	ASTM	A193-B16
				Nuts:	ASTM	A194-8C

Class No.: JP05	Page: 3	Content: Piping Components

ITEM DESCRIPTION			NOMINAL PIPE SIZE 15	20	25	40	50	80	100	150	200	250	300
* PIPE													
Pipe		74.33.21	*	*	*	*	*	*	*	*	*	*	*
Pipe Nipple 50 mm			*	*	*	*							
* FLANGES													
Blind Flange		76.64.12	*	*	*	*	*	*	*	*	*	*	*
Spectacle Blind Flange		76.88.07	*	*	*	*	*	*	*	*	*	*	*
Spacer Ring Type (ANS Flanges)			*	*	*	*	*	*	*	*	*	*	*
Welding Neck Flange		76.64.82	*	*	*	*	*	*	*	*	*	*	*
* FITTINGS													
Cap	Butt-Weld. End	76.32.18	*	*	*	*	*	*	*	*	*	*	*
Elbow 45 Deg.	Butt-Weld. End	76.32.38	*	*	*	*	*	*	*	*	*	*	*
Elbow 90 Deg.	Butt-Weld. End	76.32.39/40	*	*	*	*	*	*	*	*	*	*	*
Equal Tee	Butt-Weld. End	76.32.84	*	*	*	*	*	*	*	*	*	*	*
Elbow 45 Deg.	Socket-Weld. End	76.36.38	*	*	*	*							
Elbow 90 Deg.	Socket-Weld. End	76.36.39	*	*	*	*							
Equal Tee	Socket-Weld. End	76.36.80	*	*	*	*							
Coupling	Socket-Weld. End	76.36.28	*	*	*	*							
Cap	Socket-Weld. End	76.36.18	*	*	*	*							
* VALVES													
Check Valve BW. Special Class		75.59.10	*	*	*	*	*	*	*	*	*	*	*
Gate Valve BW. Special Class		75.59.30	*	*	*	*	*	*	*	*	*	*	*
Globe Valve BW. Special Class		75.59.40	*	*	*	*	*	*	*				
* MISCELLANEOUS													
Gasket, Spiral Wound	85.41.37		*	*	*	*	*	*	*	*	*	*	*
Orifice Flange Set	60.88.52						*	*	*	*	*		

Class No.: JP05	Page: 4	**Content:** **Reducing Piping Components**

Run		Br.	BROB 76.80.10	RECB 76.32.70	REEB 76.32.71	TERB 76.32.85	TERS 76.36.85
20	×	15		*	*	*	*
25	×	15		*	*	*	*
25	×	20		*	*	*	*
40	×	15		*	*	*	*
40	×	20		*	*	*	*
40	×	25		*	*	*	*
50	×	20		*	*	*	
50	×	25		*	*	*	
50	×	40		*	*	*	
80	×	40		*	*	*	
80	×	50	*	*	*	*	
100	×	40		*	*		
100	×	50	*	*	*		
100	×	80	*	*	*	*	
150	×	50	*				
150	×	80	*	*	*	*	
150	×	100	*	*	*	*	
200	×	50	*				
200	×	80	*				
200	×	100	*	*	*	*	
200	×	150	*	*	*	*	
250	×	50	*				
250	×	80	*				
250	×	100	*	*	*	*	
250	×	150	*	*	*	*	
250	×	200	*	*	*	*	
300	×	50	*				
300	×	80	*				
300	×	100	*				
300	×	150	*	*	*	*	
300	×	200	*	*	*	*	
300	×	250	*	*	*	*	

COMP. NAME	DESCRIPTION
BROS	Branch Fitting Socket-Weld. Outlet
BROB	Branch Outlet Red. Butt-Weld
RECB	Reducer Conc. Butt-Weld. End
REEB	Reducer Ecc. Butt-Weld. End
TERB	Tee Reducing Butt-Weld. End
TERS	Tee Reducing Socket-Weld. End

RUN	Br.	BROS 76.83.43
40-150	15	*
200-300		*
50-80	20	*
100-300		*
50	25	*
80-100		*
150-300		*
80-100	40	*
150-300		*

Class No.:	JP05	Page:	5	Content:	Bolting and Assemblies

BOLT SET FLANGED JOINTS

DN	No.	Inch		mm	81.38.96
15	4	¾	×	130	*
20	4	¾	×	130	*
25	4	7/8	×	140	*
40	4	11/8	×	170	*
50	8	1	×	180	*
80	8	11/4	×	220	*
100	8	11/2	×	300	*
150	8	2	×	410	*
200	12	2	×	445	*

BOLT SET SPECTACLE/SPACER

DN	No.	Inch		mm	81.38.96
15	4	¾	×	140	*
20	4	¾	×	140	*
25	4	7/8	×	160	*
40	4	11/8	×	190	*
50	8	1	×	210	*
80	8	11/4	×	260	*
100	8	11/2	×	345	*
150	8	2	×	455	*
200	12	2	×	510	*

BOLT SET ORIFICE FLANGES

DN	No.	Inch		mm	81.38.96
50	8	1	×	190	*
80	8	11/4	×	230	*
100	8	11/2	×	320	*
150	8	2	×	415	*
200	12	2	×	455	*

* DRAIN POINT	Fig. 0N			
Run	DN 15-25	Br	DN 15	No.
Run	DN 40	Br	DN 20	
Branch: Table Page 1				1
Blind Flange				1
Gasket Spiral Wound				1
Gate Valve BW Special Class				1
Pipe Nipple 50 mm				1
Stud Bolt with Nuts				4
Welding Neck Flange				1

* DRAIN POINT	Fig. 0N			
Run	DN 50-300	Br	DN 20	
				No.
Branch: Table Page 1				1
Blind Flange				1
Gasket Spiral Wound				1
Gate Valve BW Special Class				1
Pipe Nipple 50 mm				1
Stud Bolt with Nuts				4
Welding Neck Flange				1

* VENT POINT	Fig. 1N			
Run	DN 15-25	Br	DN 15	
Run	DN 40	Br	DN 20	
				No.
Branch: Table Page 1				1
Blind Flange				1
Gasket Spiral Wound				1
Globe Valve BW Special Class				1
Pipe Nipple 50 mm				1
Stud Bolt with Nuts				4
Welding Neck Flange				1

* VENT POINT	Fig. 1N			
Run	DN 50-300	Br	DN 20	No.
Branch: Table Page 1				1
Blind Flange				1
Gasket Spiral Wound				1
Pipe Nipple 50 mm				1
Stud Bolt with Nuts				4
Welding Neck Flange				1

Class No.: JS02	Page: 1	Content: General
Base Material: Stainless Steel AISI 316	First Issue: Revision:	
Rating: PN 420 (Class 2500)	Date:	
Corrosion Allowance: 0 mm	Sign:	

Temperature °C		0	50	150	200	250	300	350	400
Pressure Barg.	DN 15-300	223.4	223.4	223.4	208.5	195.3	183.9	175.5	168.4

TABLE OF SCHEDULES

DN	Schedule
15	160
20	160
25	160
40	160
50	160
80	160
100	160
150	160
200	160
250	160
300	160

BRANCH CONNECTIONS 90 DEGREES

Run Size	BRANCH SIZE 15	20	25	40	50	80	100	150	200	250	300
300	C	C	C	C	E	E	E	B	B	B	A
250	C	C	C	C	E	E	E	B	B	A	
200	C	C	C	C	E	E	B	B	A		
150	C	C	C	C	E	B	B	A			
100	C	C	C	C	B	B	A				
80	C	C	C	B	B	A					
50	C	C	C	B	A						
40	C	B	B	A							
25	B	B	A								
20	B	A									
15	A										

Notes:
- Design limits are based on allowable internal pressure according to ANSI B31.3.
- Piston type check valves for horizontal mounting only.
- Application of other types of branch connections is subject to company approval.

CODE	EXPLANATION OFCHARACTERS
A	Equal tee
B	Reducing tee
C	Branch fitting outlet socket-weld
E	Branch outlet reducing butt-weld

Class No.: JS02	Page: 2	Content: Material Descriptions

* PIPE

PIPE	Pipe		DN	15-300	ASTM	A312-TP316L
			(Seamless or Welded)			
PNPP	Pipe Nipple 50 mm		DN	15-40	ASTM	A312-TP316L
			(Seamless)			

* FLANGES

BLFL	Blind Flange	DN	15-150	ASTM	A182-F316
SBFL	Spectacle Blind Flange	DN	15-300	ASTM	A240-TP316
SPRT	Spacer Ring Type (ANS Flanges)	DN	15-300	ASTM	A240-TP316
WNFL	Welding Neck Flange	DN	15-300	ASTM	A182-F316

* FITTINGS

CAPB	Cap	Butt-Weld. End	DN	15-300	ASTM	A403-WP316L
E45B	Elbow 45 Deg.	Butt-Weld. End	DN	15-300	ASTM	A403-WP316L
E90B	Elbow 90 Deg.	Butt-Weld. End	DN	15-300	ASTM	A403-WP316L
TEEB	Equal Tee	Butt-Weld. End	DN	15-300	ASTM	A403-WP316L
E45S	Elbow 45 Deg.	Socket-Weld. End	DN	15-40	ASTM	A182-F316
E90S	Elbow 90 Deg.	Socket-Weld. End	DN	15-40	ASTM	A182-F316
TEES	Equal Tee	Socket-Weld. End	DN	15-40	ASTM	A182-F316
COUS	Coupling	Socket-Weld. End	DN	15-40	ASTM	A182-F316
CAPS	Cap	Socket-Weld. End	DN	15-40	ASTM	A182-F316

* REDUCING FITTINGS

BROS	Branch Outlet Socket-Weld. End	DN	15-50	ASTM	A182-F316
BROB	Branch Outlet Red. Butt-Weld.	DN	80-300	ASTM	A182-F316
RECB	Reducer Conc. Butt-Weld. End	DN	20-300	ASTM	A403-WP316L
REEB	Reducer Ecc. Butt-Weld. End	DN	20-300	ASTM	A403-WP316L
TERB	Tee Reducing Butt-Weld. End	DN	20-300	ASTM	A403-WP316L
TERS	Tee Reducing Socket-Weld. End	DN	20-40	ASTM	A182-F316

Note:
- For full material description see relevant MESC buying description.
- Where both socket weld and butt weld fittings are specified, preference is subject to company approval.

* VALVES

CHVF	Check Valve Flanged	DN	15-300	Body:	ASTM	A351-CF8M, A182-F316
				Trim:	AISI	316 (L) + Stellite 6
GAVB	Gate Valve Butt-Weld Ends	DN	15-40	Body:	ASTM	A351-CF8M, A182-F316
				Trim:	AISI	316 (L) + Stellite 6
GAVF	Gate Valve Flanged	DN	15-300	Body:	ASTM	A351-CF8M, A182-F316
				Trim:	AISI	316 (L) + Stellite 6
GLVB	Globe Valve Butt-Weld Ends	DN	15-40	Body:	ASTM	A351-CF8M, A182-F316
				Trim:	AISI	316 (L) + Stellite 6
GLVF	Globe Valve Flanged	DN	15-100	Body:	ASTM	A351-CF8M, A182-F316
				Trim:	AISI	316 (L) + Stellite 6

* MISCELLANEOUS

GKSW	Gasket, Spiral Wound	DN	15-300	AISI	316, 316L, Graphite Filled,	
			CS Centring-, SS Inner-Ring			
ORFS	Orifice Flange Set	DN	50-300		ASTM	A182-F316
STBT	Stud Bolt with Nuts		---	Studs:	ASTM	A193-B7
				Nuts:	ASTM	A194-2H

Class No.: JS02	Page: 3	Content: Piping Components

ITEM DESCRIPTION			NOMINAL PIPE SIZE 15	20	25	40	50	80	100	150	200	250	300
* PIPE													
Pipe		74.36.40	*	*	*	*	*	*	*	*	*	*	*
Pipe Nipple 50 mm			*	*	*	*							
* FLANGES													
Blind Flange		76.65.11	*	*	*	*	*	*	*	*			
Spectacle Blind Flange		76.88.07	*	*	*	*	*	*	*	*	*	*	*
Spacer Ring Type (ANS Flanges)			*	*	*	*	*	*	*	*	*	*	*
Welding Neck Flange		76.65.80	*	*	*	*	*	*	*	*	*	*	*
* FITTINGS													
Cap	Butt-Weld. End	76.33.18	*	*	*	*	*	*	*	*	*	*	*
Elbow 45 Deg.	Butt-Weld. End	76.33.38	*	*	*	*	*	*	*	*	*	*	*
Elbow 90 Deg.	Butt-Weld. End	76.33.40	*	*	*	*	*	*	*	*	*	*	*
Equal Tee	Butt-Weld. End	76.33.84	*	*	*	*	*	*	*	*	*	*	*
Elbow 45 Deg.	Socket-Weld. End	76.37.38	*	*	*	*							
Elbow 90 Deg.	Socket-Weld. End	76.37.39	*	*	*	*							
Equal Tee	Socket-Weld. End	76.37.80	*	*	*	*							
Coupling	Socket-Weld. End	76.37.28	*	*	*	*							
Cap	Socket-Weld. End	76.37.18	*	*	*	*							
* VALVES													
Check Valve Flanged		75.40.11				*	*	*	*	*	*	*	
			*	*	*	*							
Gate Valve Butt-Weld Ends		75.58.31	*	*	*	*							
Gate Valve Flanged		75.40.31	*	*	*	*	*	*	*	*	*	*	*
Globe Valve Butt-Weld Ends		75.58.41	*	*	*	*							
Globe Valve Flanged		75.40.41	*	*	*	*	*	*	*				
* MISCELLANEOUS													
Gasket, Spiral Wound		85.41.37	*	*	*	*	*	*	*	*	*	*	*
Orifice Flange Set		60.88.52					*	*	*	*	*	*	*

Class No.: JS02	Page: 4	**Content: Reducing Piping Components**

Run		Br.	BROB 76.79.71	RECB 76.33.70	REEB 76.33.73	TERB 76.33.85	TERS 76.37.85
20	×	15		*	*	*	*
25	×	15		*	*	*	*
25	×	20		*	*	*	*
40	×	15		*	*	*	*
40	×	20		*	*	*	*
40	×	25		*	*	*	*
50	×	20		*	*	*	
50	×	25		*	*	*	
50	×	40		*	*	*	
80	×	40		*	*	*	
80	×	50	*	*	*	*	
100	×	40		*	*	*	
100	×	50	*	*	*	*	
100	×	80	*	*	*	*	
150	×	50	*				
150	×	80	*	*	*	*	
150	×	100	*	*	*	*	
200	×	50	*				
200	×	80	*				
200	×	100	*	*	*	*	
200	×	150	*	*	*	*	
250	×	50	*				
250	×	80	*				
250	×	100	*	*	*	*	
250	×	150	*	*	*	*	
250	×	200	*	*	*	*	
300	×	50	*				
300	×	80	*				
300	×	100	*				
300	×	150	*	*	*	*	
300	×	200	*	*	*	*	
300	×	250	*	*	*	*	

COMP. NAME	DESCRIPTION
BROS	Branch Fitting Socket-Weld. Outlet
BROB	Branch Outlet Red. Butt-Weld
RECB	Reducer Conc. Butt-Weld. End
REEB	Reducer Ecc. Butt-Weld. End
TERB	Tee Reducing Butt-Weld. End
TERS	Tee Reducing Socket-Weld. End

RUN	Br.	BROS 76.83.38
40-150	15	*
200-300		*
50-80	20	*
100-300		*
50	25	*
80-100		*
150-300		*
80-100	40	*
150-300		*

Class No.: JS02	Page: 5	Content: Bolting and Assemblies

BOLT SET FLANGED JOINTS

DN	No.	Inch	mm	81.38.61
15	4	¾ ×	130	*
20	4	¾ ×	130	*
25	4	7/8 ×	140	*
40	4	11/8 ×	170	*
50	8	1 ×	180	*
80	8	11/4 ×	220	*
100	8	11/2 ×	300	*
150	8	2 ×	410	*
200	12	2 ×	445	*
250	12	21/2 ×	570	*
300	12	23/4 ×	630	*

BOLT SET SPECTACLE/SPACER

DN	No.	Inch	mm	81.38.61
15	4	¾ ×	140	*
20	4	¾ ×	140	*
25	4	7/8 ×	160	*
40	4	11/8 ×	190	*
50	8	1 ×	210	*
80	8	11/4 ×	260	*
100	8	11/2 ×	345	*
150	8	2 ×	455	*
200	12	2 ×	510	*
250	12	21/2 ×	640	*
300	12	23/4×	720	*

BOLT SET ORIFICE FLANGES

DN	No.	Inch	mm	81.38.61
50	8	1 ×	190	*
80	8	11/4 ×	230	*
100	8	11/2 ×	320	*
150	8	2 ×	415	*
200	12	2 ×	455	*
250	12	21/2 ×	570	*
300	12	23/4 ×	640	*

DRAIN POINT Fig. 0N

Run	DN 15-25	Br	DN 15	
Run	DN 40	Br	DN 20	No.
Branch: Table Page 1				1
Blind Flange				1
Gasket Spiral Wound				1
Gate Valve Butt-Weld Ends				1
Pipe Nipple 50 mm				1
Stud Bolt with Nuts				4
Welding Neck Flange				1

* DRAIN POINT Fig. 0N

Run	DN 50-300	Br	DN 20	
				No.
Branch: Table Page 1				1
Blind Flange				1
Gasket Spiral Wound				1
Gate Valve Butt-Weld Ends				1
Pipe Nipple 50 mm				1
Stud Bolt with Nuts				4
Welding Neck Flange				1

* VENT POINT Fig. 1N

Run	DN 15-25	Br	DN 15	
Run	DN 40	Br	DN 20	
				No.
Branch: Table Page 1				1
Blind Flange				1
Gasket Spiral Wound				1
Globe Valve Butt-Weld Ends				1
Pipe Nipple 50 mm				1
Stud Bolt with Nuts				4
Welding Neck Flange				1

* VENT POINT Fig. 1N

Run	DN 50-300	Br	DN 20	No.
Branch: Table Page 1				1
Blind Flange				1
Gasket Spiral Wound				1
Globe Valve Butt-Weld Ends				1
Pipe Nipple 50 mm				1
Stud Bolt with Nuts				4
Welding Neck Flange				1

Class No.: JS07	Page: 1	
Base Material: Stainless Steel AISI 321, Stab. HT.	First Issue: Revision:	
Rating: PN 420 (Class 2500)	First Issue: Date:	
Corrosion Allowance: 0 mm	Sign:	

Temperature °C		0	150	200	250	300	350	400	450	500	538
Pressure Barg.	DN 15-50	328.9	312.4	286.3	267.1	254.4	244.4	238.5	234.8	225.9	204.7
	DN 80-600	236.6	236.6	236.6	229.5	218.9	209.9	202.4	198.5	193.6	190.7

TABLE OF SCHEDULES

BRANCH CONNECTIONS 90 DEGREES

DN	Schedule	Run Size	BRANCH SIZE 15	20	25	40	50	80	100	150	200	250	300	350	400	450	500	600
15	160	600	C	C	C	C	E	E	E	E	E	E	B	B	B	B	B	A
20	160	500	C	C	C	C	E	E	E	E	E	B	B	B	B	B	A	
25	160	450	C	C	C	C	E	E	E	E	E	B	B	B	B	A		
40	160	400	C	C	C	C	E	E	E	E	B	B	B	B	A			
50	160	350	C	C	C	C	E	E	E	E	B	B	B	A				
80	160	300	C	C	C	C	E	E	E	B	B	B	A					
100	160	250	C	C	C	C	E	E	E	B	B	A						
150	160	200	C	C	C	C	E	E	B	B	A							
200	24.0	150	C	C	C	C	E	B	B	A								
250	30.0	100	C	C	C	C	B	B	A									
300	36.0	80	C	C	C	B	B	A										
350	40.0	50	C	C	C	B	A											
400	44.0	40	C	B	B	A												
450	50.0	25	B	B	A													
500	56.0	20	B	A														
600	66.0	15	A															

Notes:
- Design limits are acc flange rating ANSI B16.5 material group 2.4 and to allowable internal pressure acc. ANSI B31.3.
- Piston type check valves for horizontal mounting only.
- Cold bending of pipe is not allowed and hot bending is not recommended.
- For temperature points a brach outlet (DN 50) shall be used for nominal pipe sizes DN 80 and above.
- Application of other types of branch connections is subject to company approval.

CODE	EXPLANATION OFCHARACTERS
A	Equal tee
B	Reducing tee
C	Branch fitting outlet socket-weld
E	Branch outlet reducing butt-weld

Class No.: JS07	Page: 2	Content: Material Descriptions

* PIPE						
PIPE	Pipe		DN	15-150	ASTM	A312-TP321 Stab .HT. (Seamless or Welded.)
			DN	200-300	ASTM	A312-TP321 Stab. HT. (Seamless)
			DN	350-600	ASTM	A358-TP321 Stab. HT. (Welded)
PNPP	Pipe Nipple 50 mm		DN	15-40	ASTM	A312-TP321 Stab. HT. (Seamless)
* FLANGES						
BLFL	Blind Flange		DN	15-300	ASTM	A182-F321 Stab. HT.
SBFL	Spectacle Blind Flange		DN	15-300	ASTM	A240-TP321 Stab. HT.
SPRT	Spacer Ring Type (ANS Flanges)		DN	15-300	ASTM	A240-TP321 Stab. HT.
WNFL	Welding Neck Flange		DN	15-300	ASTM	A182-F321 Stab. HT.
* FITTINGS						
CAPB	Cap	Butt-Weld. End	DN	15-600	ASTM	A403-WP-S-321 Stab .HT.
E45B	Elbow 45 Deg.	Butt-Weld. End	DN	15-600	ASTM	A403-WP-S-321 Stab. HT.
E90B	Elbow 90 Deg.	Butt-Weld. End	DN	15-400	ASTM	A403-WP-S-321 Stab. HT.
			DN	450-600	ASTM	A403-WP-S/W-321 Stab .HT.
TEEB	Equal Tee	Butt-Weld. End	DN	15-400	ASTM	A403-WP-S-321 Stab. HT.
			DN	450-600	ASTM	A403-WP-S/W-321 Stab. HT.
E45S	Elbow 45 Deg.	Socket-Weld. End	DN	15-40	ASTM	A182-F321 Stab. HT.
E90S	Elbow 90 Deg.	Socket-Weld. End	DN	15-40	ASTM	A182-F321 Stab. HT.
TEES	Equal Tee	Socket-Weld. End	DN	15-40	ASTM	A182-F321 Stab. HT.
COUS	Coupling	Socket-Weld. End	DN	15-40	ASTM	A182-F321 Stab. HT.
CAPS	Cap	Socket-Weld. End	DN	15-40	ASTM	A182-F321 Stab. HT.
* REDUCING FITTINGS						
BROS	Branch Outlet Socket-Weld. End		DN	15-50	ASTM	A182-F321 Stab .HT.
BROB	Branch Outlet Red. Butt-Weld.		DN	80-600	ASTM	A182-F321 Stab. HT.
RECB	Reducer Conc. Butt-Weld. End		DN	20-400	ASTM	A403-WP-S-321 Stab. HT.
			DN	450-600	ASTM	A403-WP-S/W-321 Stab. HT.
REEB	Reducer Ecc. Butt-Weld. End		DN	20-400	ASTM	A403-WP-S-321 Stab. HT.
			DN	450-600	ASTM	A403-WP-S/W-321 Stab. HT.
TERB	Tee Reducing Butt-Weld. End		DN	20-400	ASTM	A403-WP-S-321 Stab. HT.
			DN	450-600	ASTM	A403-WP-S/W-321 Stab. HT.
TERS	Tee Reducing Socket-Weld. End		DN	20-40	ASTM	A182-F321 Stab. HT.

* VALVES						
CHVB	Check Valve Butt-Weld Ends	DN	15-300	Body:	ASTM	A351-CF8C, A182-F321
				Trim:	AISI	321 + Stellite 6
GAVB	Gate Valve Butt-Weld Ends	DN	15-300	Body:	ASTM	A351-CF8C, A182-F321
				Trim:	AISI	321 + Stellite 6
GLVB	Globe Valve Butt-Weld Ends	DN	15-100	Body:	ASTM	A351-CF8C, A182-F321
				Trim:	AISI	321 + Stellite 6
* MISCELLANEOUS						
GKSW	Gasket, Spiral Wound	DN	15-300	AISI	316, 316L, Graphite Filled, CS Centring-, SS Inner-Ring	
STBT	Stud Bolt with Nuts		-----	ASTM	A453-GR.660, CL.A.	

Note:
- For full material description see relevant MESC buying description.
- Where both socket weld and butt weld fittings are specified, preference is subject to company approv

Class No.: JS07	Page: 3	Content: Piping Components

ITEM DESCRIPTION			NOMINAL PIPE SIZE 15	20	25	40	50	80	100	150	200	250	300	350	400	450	500	600
* PIPE																		
Pipe		74.36.40	*	*	*	*	*	*	*	*								
									*	*	*	*	*	*	*	*		
Pipe Nipple 50 mm			*	*	*	*												
* FLANGES																		
Blind Flange		76.65.10	*	*	*	*	*	*	*	*	*	*	*					
Spectacle Blind Flange		76.88.07	*	*	*	*	*	*	*	*	*	*	*					
Spacer Ring Type (ANS Flanges)			*	*	*	*	*	*	*	*	*	*	*					
Welding Neck Flange		76.65.80	*	*	*	*	*	*	*	*	*	*	*					
* FITTINGS																		
Cap	Butt-Weld. End	76.33.18	*	*	*	*	*	*	*	*								
									*	*	*	*	*	*	*	*		
Elbow 45 Deg.	Butt-Weld. End	76.33.38									*	*	*	*	*	*	*	*
			*	*	*	*	*	*	*	*								
Elbow 90 Deg.	Butt-Weld. End	76.33.41	*	*	*	*	*	*	*	*								
									*	*	*	*	*	*	*	*		
Equal Tee	Butt-Weld. End	76.33.84	*	*	*	*	*	*	*	*								
									*	*	*	*	*	*	*	*		
Elbow 45 Deg.	Socket-Weld. End	76.37.38	*	*	*	*												
Elbow 90 Deg.	Socket-Weld. End	76.37.39	*	*	*	*												
Equal Tee	Socket-Weld. End	76.37.80	*	*	*	*												
Coupling	Socket-Weld. End	76.37.28	*	*	*	*												
Cap	Socket-Weld. End	76.37.18	*	*	*	*												
* VALVES																		
Check Valve Butt-Weld End		75.58.11	*	*	*	*	*	*	*	*	*	*	*					
Gate Valve Butt-Weld End		75.58.31	*	*	*	*	*	*	*	*	*	*	*					
Globe Valve Butt-Weld End		75.58.41	*	*	*	*	*	*	*									
* MISCELLANEOUS																		
Gasket, Spiral Wound		85.41.37	*	*	*	*	*	*	*	*	*	*	*					

COMP. NAME	DESCRIPTION

Class No.:	JS07	Page:	4	Content:	Reducing Piping Components

Run	Br.	BROB	RECB 76.33.70	REEB 76.33.73	TERB 76.33.85	TERS 76.37.85
20×15			*	*	*	*
25×15			*	*	*	*
25×20			*	*	*	*
40×15			*	*	*	*
40×20			*	*	*	*
40×25			*	*	*	*
50×20			*	*		
50×25			*	*		
50×40			*	*	*	
80×40			*	*	*	
80×50			*	*	*	*
100×40				*	*	
100×50		*	*	*	*	
100×80		*	*	*	*	
150×50		*				
150×80		*	*	*	*	
150×100		*	*	*	*	
200×50		*				
200×80		*				
200×100			*	*	*	
200×150			*	*	*	
250×50		*				
250×80		*				
250×100		*	*	*	*	
250×150			*	*	*	
250×200			*	*	*	
300×50		*				
300×80		*				
300×100		*				
300×150		*	*	*		
300×200		*	*	*		
300×250		*	*	*		
350×50		*				
350×80		*				
350×100		*				
350×150		*	*	*		
350×200			*	*	*	
350×250			*	*	*	
350×300			*	*	*	

Run	Br.	BROB	RECB 76.33.70	REEB 76.33.73	TERB 76.33.85
400×50		*			
400×80		*			
400×100		*			
400×150		*	*	*	
400×200			*	*	*
400×250			*	*	*
400×300			*	*	*
400×350			*	*	*
450×50		*			
450×80		*			
450×100		*			
450×150		*			
450×200		*	*	*	
450×250			*	*	*
450×300			*	*	*
450×350			*	*	*
450×400			*	*	*
500×50		*			
500×80		*			
500×100		*			
500×150		*			
500×200		*	*	*	
500×250			*	*	*
500×300			*	*	*
500×350			*	*	*
500×400			*	*	*
500×450			*	*	*
600×50		*			
600×80		*			
600×100		*			
600×150		*			
600×200		*			
600×250		*	*	*	
600×300			*	*	*
600×350			*	*	*
600×400			*	*	*
600×450			*	*	*
600×500			*	*	*

BROS	Branch Fitting Socket-Weld. Outlet
BROB	Branch Outlet Red. Butt-Weld
RECB	Reducer Conc. Butt-Weld. End
REEB	Reducer Ecc. Butt-Weld. End
TERB	Tee Reducing Butt-Weld. End
TERS	Tee Reducing Socket-Weld. End

RUN	Br.	BROS 76.83.43
40-150	15	*
200-600		*
50-80	20	*
100-600		*
50	25	*
80-100		*
150-600		*
80-100	40	*
150-300		*
350-600		*

Class No.:	JS07	Page:	5	Content:	Bolting and Assemblies

BOLT SET FLANGED JOINTS

DN	No.	Inch	mm	81.38.40
15	4	¾ ×	130	*
20	4	¾ ×	130	*
25	4	7/8 ×	140	*
40	4	11/8 ×	170	*
50	8	1 ×	180	*
80	8	11/4 ×	220	*
100	8	11/2 ×	300	*
150	8	2 ×	410	*
200	12	2 ×	445	*
250	12	21/2 ×	570	*
300	12	23/4 ×	630	*

BOLT SET SPECTACLE/SPACER

DN	No.	Inch	mm	81.38.40
15	4	¾ ×	140	*
20	4	¾ ×	140	*
25	4	7/8 ×	160	*
40	4	11/8 ×	190	*
50	8	1 ×	210	*
80	8	11/4 ×	260	*
100	8	11/2 ×	345	*
150	8	2 ×	455	*
200	12	2 ×	510	*
250	12	21/2 ×	640	*
300	12	23/4 ×	720	*

DRAIN POINT Fig. 0N

Run	DN 15-25	Br	DN 15	
Run	DN 40	Br	DN 20	No.
Branch: Table Page 1				1
Blind Flange				1
Gasket Spiral Wound				1
Gate Valve Butt-Weld Ends				1
Pipe Nipple 50 mm				1
Stud Bolt with Nuts				4
Welding Neck Flange				1

* DRAIN POINT Fig. 0N

Run	DN 50-600	Br	DN 20	No.
Branch: Table Page 1				1
Blind Flange				1
Gasket Spiral Wound				1
Gate Valve Butt-Weld Ends				1
Pipe Nipple 50 mm				1
Stud Bolt with Nuts				4
Welding Neck Flange				1

* VENT POINT Fig. 1N

Run	DN 15-25	Br	DN 15	
Run	DN 40	Br	DN 20	No.
Branch: Table Page 1				1
Blind Flange				1
Gasket Spiral Wound				1
Globe Valve Butt-Weld Ends				1
Pipe Nipple 50 mm				1
Stud Bolt with Nuts				4
Welding Neck Flange				1

* VENT POINT Fig. 1N

Run	DN 50-600	Br	DN 20	
				No.
Branch: Table Page 1				1
Blind Flange				1
Gasket Spiral Wound				1
Globe Valve Butt-Weld Ends				1
Pipe Nipple 50 mm				1
Stud Bolt with Nuts				4
Welding Neck Flange				1